Azerbaijan
National Academy of Sciences
Institute of Archaeology and Ethnography

Fuad Huseynov

Short Report
Excavations of Agili Dere Settlement Site
KP 358 - BTC ROW

Baku – Azerbaijan
2007

ABSTRACT

This Report describes the results of excavations of a late Eneolithic settlement discovered near Ashagi Ayibli village, Tovuz District, at KP 358, BTC ROW. Excavations that took place during the period from 1 June to 15 June, 2005 revealed a series of features - remains of a hearth and a kiln, storage pits and two intrusive graves of late Bronze Age date.

The Eneolithic material recovered from the excavations included varied pottery ware and stone tools. The intrusive graves produced pottery and jewellery items - agate, paste, stone and bronze beads, bracelets, pendants and bronze buttons.

Based on the study of these artefacts and their comparison with similar known material, the main period of use of the site is assumed to date to the late Eneolithic period.

Table of Contents

I. Introduction

- ***Description of the BTC and SCP Archaeology Programme***

Archaeological excavations in connection with the construction of the BTC and SCP pipelines were conducted prior to, and during the construction of these pipelines. These excavations generally were carried out within the 44m wide pipeline corridor from 2001 to 2005. The archaeology programme consisted of five phases of which the first four phases constituted field investigations:

Phase I – actual and potential archaeological sites were visually identified during walkover or baseline surveys during the selection of the pipeline route.

Phase II – the sites that were identified during Phase I as archaeologically potential were tested by digging test pits and conducting small-scale trial excavations.

Phase III – small and large-scale excavations were carried out within the BTC ROW.

Phase IV – small and large-scale excavations were carried out within the SCP ROW.

In addition to these, all the construction activities were monitored by watching brief archaeologists.

In general, during the core Phase III and Phase IV archaeological excavations were carried out at 41 sites with thousands of artefacts discovered. None of these sites had been previously known to archaeological science.

Phase V – preparation of scientific reports on the archaeological excavations carried out during the previous phases.

- ***Discovery of the Site***

The Agili Dere settlement site at KP 358 was not identified during Phase I or Phase II. The major reason was that the site was located on arable land and the archaeologists were not allowed to enter areas with standing crops during Phase I or Phase II surveys. In addition, there were no visible surface markers at the site to attract attention. The settlement site was discovered by a watching brief archaeologist following topsoil stripping on the SCP side of the pipeline easement.

The site was excavated between 1st June and 15th June, 2005 under the guidance of Tufan Akhundov and with participation of Fuad Huseynov, both from the Institute of Archaeology and Ethnography, Azerbaijan National Academy of Sciences. The work was supervised by the BTC archaeological representatives Tom Jameson and Claire Angus.

II. Archaeological Contexts for Understanding the Site

- ***General Archaeological Overview of this Portion of Azerbaijan***

The Ganja-Gazakh region of Azerbaijan, particularly the Kura riverside areas including the Tovuz District, are rich in archaeological monuments of different types. The fertile soil of the area, plentiful water sources, and favourable climatic conditions were the reasons that people have been occupying this area since ancient times.

Settlements and cemeteries dating from different historical periods have been identified and explored in the area. Archaeological excavations have been conducted in the area since the first

half of the 19th century, however initially the artefacts recovered from different sites were taken out of the country. The Azerbaijan Archaeological Committee set up in 1923 played an important part in the planned investigation of archaeology in Azerbaijan. The services of such Azerbaijan scientists as I Jafarzade, S. Gaziyev and Y. Hummelin in the study of archaeology of the western part of Azerbaijan cannot be overestimated.

The relatively more investigated monuments in the area are early farmers and cattle-breeders' sites dating to the Eneolithic Period (between 6000 and 4000, B.C.). Such sites as Shomutepe, Gargalartepesi and Toyratepe in Agstafa, Babadervish in Gazakh, Goytepe, Mentejtepe and Toyratepe II in Tovuz, Kechili, Rustepesi and Ganlitepe in Shamkir and others could be mentioned as ancient settlement sites. The first Eneolithic monument excavated in the Ganja-Gazakh area was the Shomutepe site. As the artefactual material recovered from this site drastically differed from that of South Caucasian coeval sites a new Shomutepe archaeological culture was designated which covers the Kura River mid flow basin, the south-east of present-day Georgia and the Ganja-Gazakh region of Azerbaijan.

Very important and valuable sites were discovered and explored in the western region of Azerbaijan in connection with the BTC and SCP pipelines construction. The excavated sites could be said to date to almost all historical periods. Among these, are such Eneolithic settlement sites as Boyuk Kasik, Khojakhan, Agili Dere and Poylu.

- ***General Summary of the Geography and Geology of the Area***

The Minor Caucasus foothills are rich in fertile land and natural resources. The area stretching from Ganja to Gazakh played an important part in the political, economic and cultural life of early inhabitants of Azerbaijan. Plentiful water sources, pastures, woods and diverse fauna were the primary factors that attracted people to settle in this area.

The flat and partially foothill zone is located 150-600m above sea level. This zone is characteristed by brown and chernozem soils fit for crop growing. At the same time large portions of this zone are semi-desert lands with sagebrush being the major vegetation. At a height of 500-600m the areas covered with sagebrush scrub are replaced with woods. Rapid water rivers running through deep gorges of the Minor Caucasus come out to the flat area and form wide river beds in these places which become even wider closer towards the Kura River. The fairly large rivers in this area are Agstafachai, Hasansu, Tovuzchai, Zayamchai, Shamkirchai and Goshgarchai. In the summer months the water flow in these rivers decreases to the extent that some of them may completely dry up and yield no water to the Kura River.

There are a number of mineral deposits in the region's mountainous areas. Commercially significant of these are a copper mine in Gedabey and an iron ore mine in Dashkasan. Deposits of semiprecious stones such as agate, opal, chalcedony, amethyst, jasper, aragonite and crystal were also discovered in this area. A gold mine and one of the largest obsidian mines in the Caucasus are located in the Kelbajar mountains in the immediate vicinity of Gedabey and Dashkasan.

Moderately warm semi-desert and arid steppe climate with mild winters is typical of the lowlands of the area. The average annual temperature totals 10-14 C. The average monthly temperature falls to 0-5 C in January and rose to 18-24.5 C in July. The annual precipitation is 350 to 380mm.

III. Field and Office Methods

- ***Field Methods***

The site was divided into trenches of 2m by 2.5m and a total of 150 square meters were excavated (Figure 1). Work was undertaken by the project labour force using spades, shovels, brushes, knives and other hand tools. The height of the site above sea level was established using GPS, and an appropriate site plan was drawn up. Artefacts recovered in the course of excavations were recorded in the field logbook with brief descriptions of their morphology and indication of the depth of the deposit. After initial processing the finds were boxed and sent off first to the BTC Ganja Guest House and then to the IoAE in Baku.

- ***Office/Laboratory Methods***

All the archaeological material recovered from site was accordingly treated at the Archaeological Service department of the IoAE. Where possible the pottery fragments were mended into complete or partially complete pots. Photographs of artefacts were taken and drawings were made where relevant.

- ***Special Analysis***

Samples of Eneolithic pottery were retained for laboratory analysis. These were analysed at Archaeometry Laboratory, University of Missouri. The results of the analysis are provided in Appendix I.

- ***Archive Disposition***

All the processed archaeological material was handed over to the IoAE special archive set up for the storage of finds discovered on the BTC and SCP ROW.

IV. Excavation Results

- ***Site Description***

The Agili Dere settlement site is located 1km north-east of Ashagi Ayibli village, Tovuz District, at KP 358 of the BTC ROW at grid reference 8573204, 4534665. The height above sea level is 334m. The site stands on slightly sloping flat high ground approximately 1km to the west of the Zayamchai River. The area west and south of the site is flat arable land while to the north just beyond the adjacent 200m wide level ground the terrain undulates, forming numerous hillocks up to the Kura River flowing just a few kilometres away from the site. To the east the land slopes gradually down into the Zayamchai River flood plain extending for over 500m (Photo 1). The soil in the area is predominantly characterized as dark grey clayey soil (Photo 2).

The ground at the site had been frequently ploughed because the entire area had been planted as a vineyard. Pottery pieces and stone objects were lifted from within the plough furrows that could be clearly seen on the ground surface. More cultural material was recovered from the lower subsoil layer. The majority of pottery ware collected belonged to the Leylatepe Culture. Late Bronze Age pottery could also be encountered. Visual survey of the area gave indications of the presence of a possible late Bronze Age settlement site to the south-east of the Agili Dere site.

- ***Description of Cultural Layers***

It was impossible to precisely study the cultural content of the uppermost soil layer because during site preparation for the construction of the pipelines, a 30cm thick topsoil had already been removed by machines. The spoil heap stacked along the construction corridor contained pieces of

pottery and other archaeological evidence of Eneolithic and late Bronze Age date. The 68-103cm thick lower layer of the site produced late Eneolithic material.

Two intrusive burials were detected at a depth of 103cm. The burials contained rich archaeological material (Photo 5).

It should be noted that a trench of 12m by 1.5m was excavated at the site. It fell within Trenches VIII-B to XIII-B (Photo 2).

In total, five storage pits, a potter's kiln, a hearth and two intrusive graves were unearthed within the lower soil layer of the Agili Dere site.

Storage pits

Storage Pit I was discovered in a borrow pit that fell within Trench VIII-B. It had a cylindrical shape and was 1.35m in diameter. The floor of the storage pit was reached at 1.15m depth. The storage pit truncated by a digging machine survived to a depth of 0.3m. The pit produced pottery pieces of Eneolithic date.

Storage Pit 2 exposed at 0.38m depth in Trench IX-A extended to a depth of 0.98m. This was a roughly cylindrical feature measuring 1.25m in diameter. The northwest section of the pit was somewhat narrow at 0.74cm depth. The pit had a fill consisting of five layers of ash deposits which contained Eneolithic pottery, stone tools and osteological remains. The pit was assumed to have been originally intended for use as a rubbish pit.

Storage Pit 3 was located in the west corner of Trench XI-A with a smaller portion extending into Trench XII-A. The top edge of the storage pit was exposed at 0.6m depth, the bottom was reached at 1.19m depth. The pit mouth had the shape of a round-cornered square with 0.6-0.7m sides. The pit, widening downward like a cone, measured 1.5m in mid-section diameter and 2m in bottom diameter. Heart-affected stones and ash could be seen in the southeast part of the pit. When cleared out, the pit yielded Eneolithic pottery, fragments of flint and obsidian tools and osteological remains.

Storage Pit 4 was uncovered 12cm below the surface of subsoil in Trench V-A. It had a circular shape, measured 1.15m in mouth diameter and extended to a depth of 0.56m where the bottom diameter was 1.5m. The preserved depth of the pit was 0.44m. Burnt clay and heat-affected Eneolithic pottery, stone tools and osteological remains were contained in the pit.

Storage Pit 5 was revealed at a depth of 0.06m at the baulk of Trenches I-A, I-B, II-A and II-B. It had a cylindrical shape and measured 1.25-1.3m in diameter. The pit floor was reached at 0.34m depth. The preserved depth was 0.28m. The pit fill consisted of burnt ash-rich clay.

Potter's kiln

A patch of fire-reddened ground interpreted as a kiln was unearthed in Trench XII-B. The southern section of the kiln had already been damaged by the trenching machine. The feature exposed 0.52m below the surface was 1.1-1.15m in diameter and 0.85m deep. It had a red ashy fill over a clay plastered base and contained large quantities of high quality Eneolithic pottery.

Hearth

This circular feature measuring 0.50-0.60m in diameter was discovered at the baulk of Trenches VII-B and VII-C. Its northern section had been damaged by the trenching machine. The base of

the hearth was heat-affected and had a 30cm thick ash layer in its southwest part. Intact querns and Eneolithic pottery were contained within this ash layer.

Intrusive Graves

Two intrusive graves of late Bronze Age distinguished by dark brown soil colour were exposed at 1.03m depth within the Eneolithic layer of the site.

Grave 1

Grave 1 was unearthed in Trenches VI-C, VII-C and VII-D. The burial chamber had the shape of a rectangle with oval corners. It had a north-east alignment and was 2.05m long by 1.30m wide and 0.95m deep. The skeleton was lying in a flexed position on its left side with the head at the north end. The left arm was flexed and lay close to the head; the right arm was stretched along the body. Large quantities of pottery ware and jewellery were found in the grave.

Grave 2

This grave was uncovered in Trench VI-D, 30cm west of Grave 1. The burial chamber was also rectangular shaped and had oval corners. It had a north-south alignment and measured 1.5m north-south by 1.85m east-west. Two skeletons were discovered in the burial chamber. One was in a flexed position on its left side with the head at the north end and appeared to belong to a female with short stature. The other was represented by child's skeletal remains placed against the knees of the woman's skeleton. This grave produced two ceramic fragments.

- ***Description of Finds***

Eneolithic Assemblage

Pottery

The Agili Dere settlement site produced rich archaeological material the larger proportion of which is represented by pottery ware of late Eneolithic date. Forms include platter-, bowl-, kuza-, jug and jar-type pots of different sizes. The fragments recovered from the site come from pots made of different kinds of clay often tempered with plant and sand.

As regards firing, along with well fired pots there are poorly fired ones among the finds. The additives to the clay composition had also certain effect on the firing quality of pots. Different quality of firing was conditioned by the future function of the pot, as well as its shape, size and wall thickness. In addition, of great importance were the skills and workmanship of potters.

A total of 1661 pottery sherds were found at the Agili Dere site. Of these 1225 fragments represent quality ceramics, while 436 pieces come from heavy clay products.

The Eneolithic pottery assemblage is plain in style which is indicative of plain household economy and lack of experience in pottery amaking (Photos 6, 7, 8).

A certain proportion of pottery ware is straw-tempered heavy clay product made of poorly kneaded clay and poorly fired at an unstable temperature. The majority of pottery finds are of a red colour. There are also red, reddish and brown ceramic fragments having a black interlayer and irregular grey spots on the surface.

The site produced a single fragment of a paint decorated pot. Several of the Eneolithic pots have combed decorations.

Platters. One of the several platter fragments recovered from the site is worth special consideration. It comes from a straw-tempered pot with a slightly everted rim. The pot fired to a light orange colour bears traces of cream angobe on its outer surface. Both the interior and exterior surfaces are polished (Plate I.18).

Bowls. Pots of this type have slightly incurving rims. They have polished interior and exterior surfaces of a light brown colour. (Plate III.12). One of the fragments represents a plant-tempered bowl having a greyish film on the surface caused by uneven firing. Dimensions: mouth diameter – 10cm, height – 6.2cm (Plate III.2).

Kuzas. These are fine sand-tempered pots well fired at a stable temperature to a light red colour. The majority of such pots have high necks and rounded bases. One of the rim fragments represents a paint decorated kuza made of untempered clay and fired to a light brown colour. Traces left by a potter's wheel are visible on its outer surface. The pot is decorated with alternating thick and thin parallel strips horizontally applied in black paint to the pot surface. Dimensions: mouth diameter – 17cm. The pot is clearly distinct from the pottery samples typical of the site and entire area (Plate I.11; Photo 9).

Jugs. Fragment of a thick-walled plant- and sand-tempered jug well fired to a brown surface. The pot has a narrow high neck ending in a wide straight mouth. The neck to shoulder transition is abrupt. Thrown on a potter's wheel the pot is coated with a thin layer of angobe (Plate I.10).

Fragment of a jug with a narrow high neck and flaring mouth. Tempered with sand and fired to an orange colour the pot bears traces of heat on its outer surface. The neck-to-shoulder transition is abrupt (Plate II.14).

Fragment of a narrow-necked jug with a wide flaring mouth. There are obvious traces of soot on the slightly polished exterior surface. Tempered with plant and sand the pot is well fired. The inner side of the rim is painted red (Plate I.12).

Fragment of a jug with a flaring mouth and slightly everted rim. Tempered with plant and sand the pot was made on a potter's wheel and well fired to a red surface. Traces of combing are clearly visible both on the interior and exterior surfaces (Plate II.2).

Mouth fragment of a thick-walled jug with a high neck, wide flaring mouth and slightly everted rim. Tempered with plant and sand the jug was well fired to a red colour (Plate II.13).

Mouth fragment of a sand-tempered jug with a wide flaring mouth and slightly everted rim. The jug was well fired to an orange colour. Patches of surface erosion can be seen on the exterior of the pot (Plate II.1).

Neck fragment of a large-volume jug tempered with plant and sand and well fired to a red surface. The neck is straight, the rim is slightly outcurving. The rim is decorated with notches (Plate III.6).

Neck fragment of a thick-walled jug tempered with sand and poorly fired to a brown surface. The rim is slightly flanged and outcurving. Very slight traces of black soot are visible on the external surface (Plate II.3).

Fragment of a jug with a flaring mouth and slightly outcurving rim. Tempered with plant the pot was fired to a red surface and coated with a thin angobe layer. There is a channel-like protrusion along the interior circumference of the rim (Plate I.18).

Mouth fragment of a jug-type pot with a flaring mouth. Sand tempered and angobe coated, the pot was well fired to an orange colour. Traces left by a potter's wheel are visible on the surface (Plate II.9).

Fragment of a handmade jug with a slightly outcurving rim. Tempered with plant and sand the pot was poorly fired to a red surface. Heavily sooted (Plate III.4).

Fragment of a large jug-type pot. Tempered with plant and sand and poorly fired to a chestnut brown colour the pot has thick walls, a slightly outcurving rim, and a neck gradually passing into the shoulder (Plate II. 12).

Jars. Fragment of a large storage jar with a flanged everted rim. Tempered with plant and sand the pot was well fired. There is a thin layer of white angobe on the surface (Plate I.5).

Fragment of a large storage jar with a flanged everted rim. Tempered with plant the pot was well fired to a pink colour and then coated with white angobe. The neck is decorated with a channel-like groove (Plate I.4).

Fragment of a flanged everted rim representing a large thick-walled jar tempered with plant and well fired to a red colour. The pot is coated with white angobe (Plate I.2).

Fragment of a thick and flanged rim forming part of a large storage jar tempered with sand and plant and well fired to an orange colour (Plate I.1).

Fragment of an outcurving rim of a large storage jar tempered with plant and sand and well fired to a red surface (Plate I.3).

Stone Objects

The stone assemblage from the Agili Dere site is represented by pounding tools, querns, handstones, flint and obsidian cutting tools.

Querns. One of these was found at 0.33m depth in Trench II-B. Made of black porous tufa stone, the quern has an oval resting surface and slightly concave grinding surface. The survived quern fragment was 25cm long by 16cm wide and 5.5cm thick.

Fragment of a quern exposed at a depth 1.03m in Trench VI-D was made of grey porous tufa stone. The resting surface is flat, the grinding surface is concave from long use. Length – 19cm, thickness – 6.2cm ((Photo 10).

Pounding tools. Two stone tools used for pounding or grinding were recovered from the site. Both are chipped out of river-washed stones. These small tools carefully executed to allow comfortable handgrip have marks of use at both ends. Lengths – 7.5-8cm, diameters – 7-7.5cm (Photo 10).

Cutting tools. The majority of flint and obsidian cutting tools were found in storage pits. Flint blades prevail.

Obsidian cutting tools can be divided into several groups. They have largely rectangular-oblong shapes and three or four faces. Some obsidian blades have one serrated edge, while others have two serrated edges. Some cutting edges became blunt from long use. These tools are thought to have been used as sickle teeth. The blades made of opaque and translucent obsidian flakes

measure 3-4cm to 8-9cm in length and 1.5-2.2cm in width (Plate III. 9, 12, 13, 15, 19, 20, 22). Obsidian blades could have been used as either knives or teeth of assembled sickles.

Flint cutting tools are of pink, dark brown or dark grey colour, have largely oblong rectangular shapes and three or four faces. Some flakes are knife-shaped with serrations on both edges. Others have serrations along one edge, while the other edge is sharp for attaching to a wooden or bone sickle frame. These blades are thought to have been used as front, mid and rear teeth of assembled sickles. Dimensions: length – 3-6cm to 10-11cm, width – 1.5cm to 2.5vm (Plate III.8, 10, 11, 16-18, 21, 23-25).

Spindle whorl recovered from the site is chipped of white limestone. Diameter – 5.6cm, thickness – 1.8cm, hole diameter – 0.8cm (Plate III.7).

Late Bronze Age Assemblage

The cultural material of late Bronze Age date was recovered from the two intrusive graves cut through the Eneolithic layer of the Agili Dere site.

Grave 1

Pottery

Grave 1 produced eight pottery pieces. These could be identified to forms to be graphically illustrated. The pottery sherds represent jug-, bowl- and cooking-type vessels with globular bodies and flat bases. The pots have polished surfaces, some are decorated with various ornaments. The restored forms are as follows:

Globular bodied, flat-based jug with an everted rim. The pot has a polished surface and decoration made up of 9 parallel lines incised around the shoulder. Dimensions: mouth diameter – 15cm, body diameter – 32cm, base diameter – 14.5cm, height – 35cm (Plate VI.1).

Globular bodied, flat-based jug with an everted rim. The pot has a polished surface and is decorated with 6 parallel lines incised around the shoulder. Dimensions: mouth diameter – 17cm (Plate VI.2).

Globular bodied, flat-based jug with an everted rim. The pot has a polished surface with no decoration. Dimensions: mouth diameter – 17cm (Plate VI.3).

Globular bodied, flat-based jug with an everted rim. The pot has a polished surface and is decorated with 4 parallel lines incised around the shoulder. In addition, the shoulder is girded with 2 rows of circles – one above, the other below this linear ornament. Dimensions: mouth diameter – 14cm, body diameter – 18cm (Plate VI.4).

Globular bodied, flat-based jug with an everted rim. The pot has a polished surface with no decoration. Dimensions: mouth diameter – 13cm, body diameter – 15cm (Plate VI.5).

Globular bodied, flat-based jug with an everted rim. The pot has a polished surface and is decorated with 2 parallel lines incised around the shoulder. Immediately above these lines there is a row of circles running around the neck of the pot. Dimensions: mouth diameter – 13cm, body diameter – 15cm (Plate VI.6).

Globular bodied, flat-based badya with an everted rim. The pot has a polished surface and is decorated with grain-shaped circles running around the shoulder. Dimensions: mouth diameter – 15cm, body diameter – 19cm (Plate VI.7).

Globular bodied, flat-based badya with an everted rim. The pot has a polished surface and is decorated with 3 parallel lines incised around the shoulder. Dimensions: mouth diameter – 23cm, body diameter – 24cm, base diameter – 6.5cm, height – 13.5cm (Plate VI.6).

Jewellery

The jewellery recovered from Grave 1 includes bracelets, pendants, buttons and beads.

Bracelets. Two bracelets were found. They are made of bronze wire having a round cross section. One is 6,4cm in diameter, the other is 7.2cm. Both bracelets have smooth surfaces (Plate IV.8, 9).

Pendants. Two of these are made of thin bronze slabs forged into a horseshoe shape. Each has a small orifice in their central thickened part. They are 7.7cm and 8.6cm in diameter (Plate IV.6, 7).

Five bronze pendants are similarly shaped with the only difference being that the hole in their bulgy central part is cylindrical. Their diameters vary between 5.1cm and 8.2cm (Plate IV.1-5).

Awl-shaped pendant with one horizontal hole and two smaller vertical holes at one end (Plate IV.16).

Buttons. Five bronze eyeleted round buttons were found. They measure 2.4cm to 2.7cm in diameter (Plate IV. 10-14).

Beads recovered from the grave are made of bronze, stone, agate and paste:

Bronze Beads

Diamond-shaped bead with rounded corners. Length - 2.6cm, width - 1.6cm (Plate IV.17).
Rectangular-shaped bead with rounded corners and four holes. Length - 2.1cm, width - 1.6cm (Plate IV.18).
Three asymmetrically shaped tubular beads measuring 1.4cm to 2.2cm in diameter (Plate IV.19-21).
Two tubular beads - both with the same diameter of 1.6cm (Plate IV.22).
Eleven small cylindrically-shaped beads with a diameter of 4-5mm (Plate IV.23).
Twenty loop-shaped beads with a diameter of 6mm (Plate IV.24).

Stone Beads

Perforated oval bead chipped of black stone. One side is smooth. Length – 1.7cm, width – 1.9cm (Plate V.1).
Asymmetrically shaped perforated stone bead. Length – 1.5cm, width – 1.2cm (Plate V.2).
Perforated round stone bead measuring 1.1cm in diameter (Plate V.3).
Two small cylindrically shaped beads, measuring 2-3mm in length and 2-3mm in diameter (Plate V.4).

Agate Beads

Perforated globular agate bead, 1cm in diameter (Plate V.5).
Perforated agate bead - one side is flat, the other side is bulgy. Diameter – 8mm (Plate V.6).
Three perforated globular beads, 3-5mm in diameter (Plate V.7-9).
Fifty loop-shaped agate beads with oval sides. Diameter – 4mm (Plate V. 10).

Paste Beads

One hundred and twenty four white paste beads varying in size and shape. The beads are biconical, cylindrical or barrel-shaped (Plate V.12-40).

Grave 2

Pottery

Grave 2 yielded two pottery pieces.

Fragment representing a flat-based, globular-bodied, single-handled jug with an everted rim. The lower end of the handle has a round cross section, the upper end is flat. The pot has a polished surface with decoration made up of parallel horizontal lines. Two of these are incised around the pot just above the upper end of the handle, two lines girds the shoulder on a level with the mid-section of the handle and two lines run along the circumference of the pot below the lower end of the handle. Three wavy incised lines form an additional pattern in the area between the lower and middle pairs of lines. Dimensions: mouth diameter – 10cm, body diameter – 23.5cm, base diameter – 12cm, height – 24cm (Plate VI.9).

Fragment forming part of a flat-based, globular-bodied jug with an everted rim. The pot has a polished surface and is decorated with two pairs of incised lines. Dimensions: mouth diameter – 19cm, body diameter – 21cm, base diameter – 7cm, height – 11.5cm (Plate VI.10).

V. Analytical Results

- ***Interpretation of Excavation Results***

The parameters of features revealed during excavations and comparative analysis together with the stylist study of the artefactual material recovered allowed the Agili Dere site to be classified as a one-layer archaeological monument. The upper soil layers of the site had been greatly damaged by ongoing ploughing and recent topsoil stripping related to pipeline construction. The lower layer of the site measuring 68cm to 103cm in thickness produced features dating to the late Eneolithic – five storage pits, a hearth and a potter's kiln. In addition, two intrusive burials of late Bronze Age date were uncovered within the Eneolithic cultural layer.

Pottery ware prevails among the finds recovered from the Agili Dere settlement site. The analytical study of the manufacturing technique and typological analysis of the pottery ware recovered from the site make it possible to characterize the pottery industry in this area as possessing distinctive features and the tribes that occupied the area as very skilful in the art of pottery making.

The majority of harvest and cutting tools revealed at the archaeological site are made of flint. This is worth special consideration as tools of this type discovered at other late Eneolithic sites, including the Boyuk Kasik settlement site (KP 438) are also largely made of flint. The great skill, with which these cutting tools were made of flint, notable for its hardness, attests to a high level of development of the art of stone working in the area.

The spindle whorl discovered at the archaeological site suggests that local tribes in the late Eneolithic Azerbaijan were also engaged in weaving.

- ***Dating***

The chronological framework of the Agili Dere settlement was constructed based on the comparative analysis of the available artefacts and the results of special analysis. It was established that the Agili Dere settlement was first occupied in the late Eneolithic Period.

- ***Discussion and Analysis of the Results of the Work Compared with Other Sites of a Similar Nature on the Pipeline Route***

The Agili Dere site is similar in nature to such late Eneolithic settlement sites as Boyuk Kasik and Poylu excavated within the BTC and SCP construction corridor. The study of these sites has enabled certain conclusions to be drawn concerning the characteristic features of late Eneolithic settlement sites. The excavations carried out at the Agili Dere site are of All-Caucasus importance.

One of the distinguishing features of this archaeological monument from other similar sites is that it belonged to a culture that was imported to the area. From this point of view the artefacts recovered from the archaeological site differ from the rest by their peculiar characteristic features.

- ***Discussion of the Site within a Regional and National Context***

A number of settlement sites of Eneolithic date had been excavated and studied in various regions of Azerbaijan prior to archaeological excavations carried out within the BTC and SCP construction corridor. Research conducted at the Agili Dere site provided additional proof that this site occupies a special place among the South Caucasian archaeological monuments.

Unlike evidence of obsidian and flint found at other sites, those discovered at Agili Dere are largely flint, not obsidian. Numerous farming implements and cutting tools made of stone, show that the economy of the people living at the late Eneolithic Agili Dere Settlement in the 4th millenium, B.C. was crop farming. The results of excavations have once more confirmed the hypothesis that the Eneolithic culture had been imported to the area.

- ***Special Recommendations Regarding the Protection of the Site or Future Research***

All the goals and objectives of the field investigations of the Agili Dere Settlement site have been achieved. The information obtained from excavations within the BTC and SCP pipelines construction corridor can be deemed sufficient for characterization of the site. Nevertheless there is a need for future research, for more extensive excavations that may elicit new, more important facts about the nature of this monument. Therefore, the area should be protected as archaeologically sensitive should any future construction work be planned in the immediate vicinity.

- ***Recommendations for Public Education***

It would be expedient to write and publish a small book reflecting the results of excavations in order to furnish the scientific community and general public with extensive information about the late Eneolithic Agili Dere settlement.

VI. Illustrations

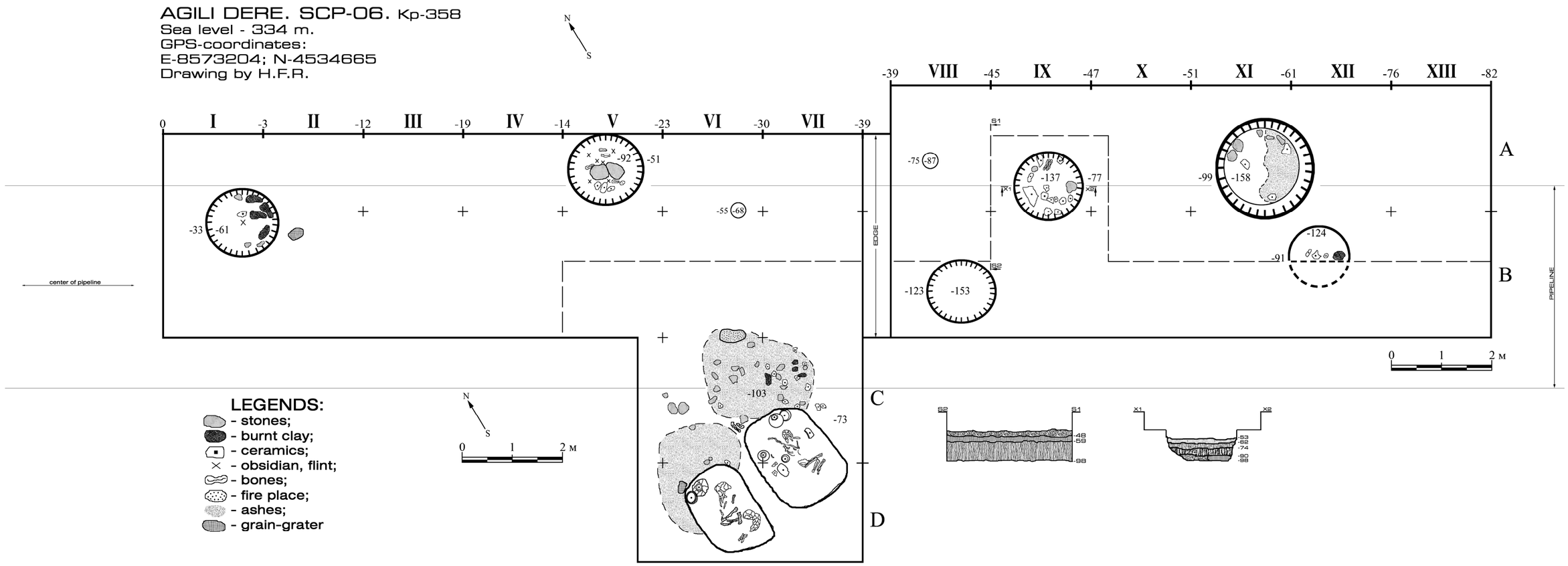

Figure 1
Agili Dere – Site Plan

Photo 1 (the arrow indicates the site location – view from the east)

Photo 2 Excavation looking west

Photo 3 Storage Pit (number unknown)

Photo 4 Storage Pit (number unknown)

Photo 5 Graves 1 and 2

Photo 6 Eneolithic pottery

Photo 7 Eneolithic pottery

Photo 8 Eneolithic pottery

Photo 9 Eneolithic painted pottery

Photo 10 Utilised stones

Plate I

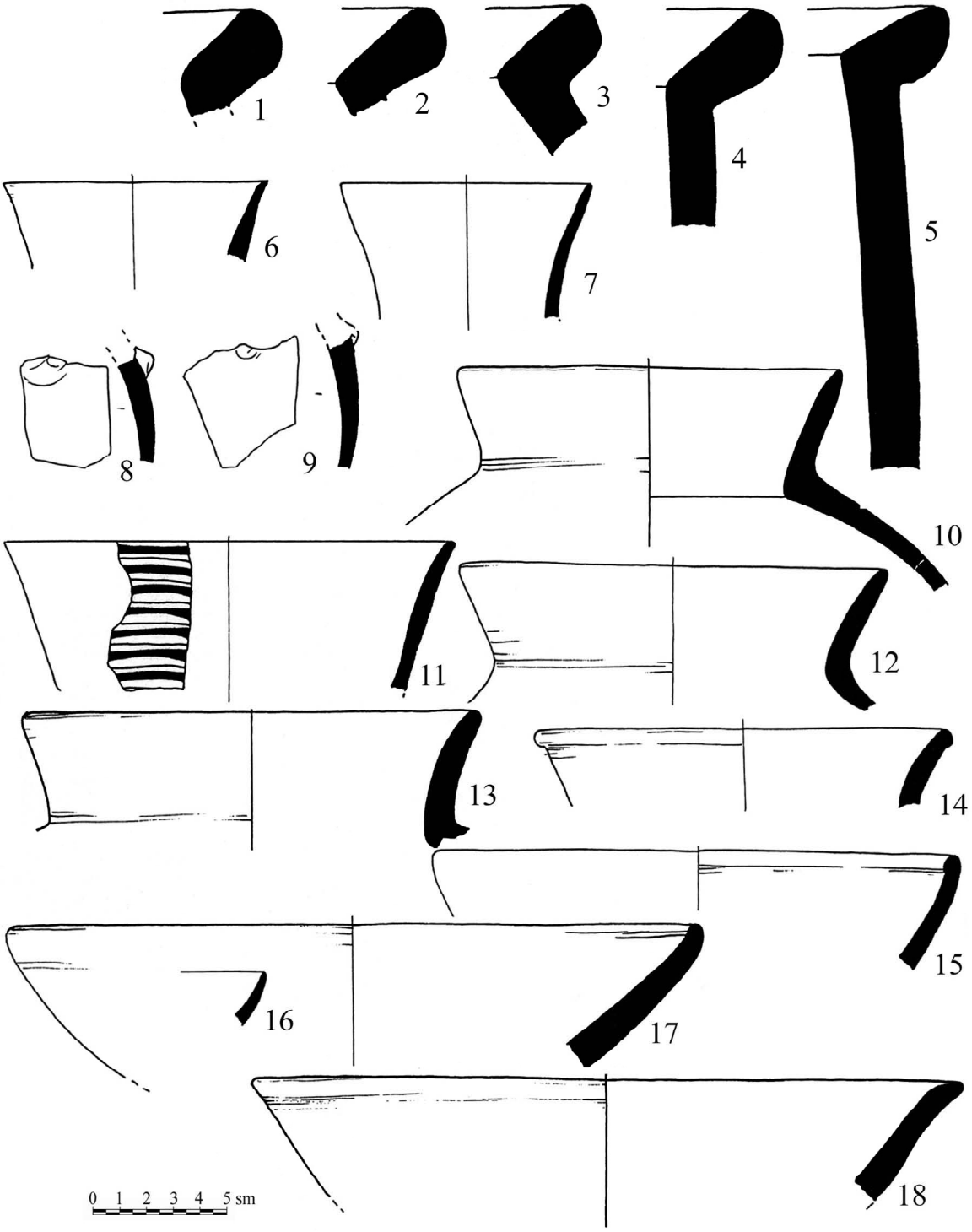

Plate II

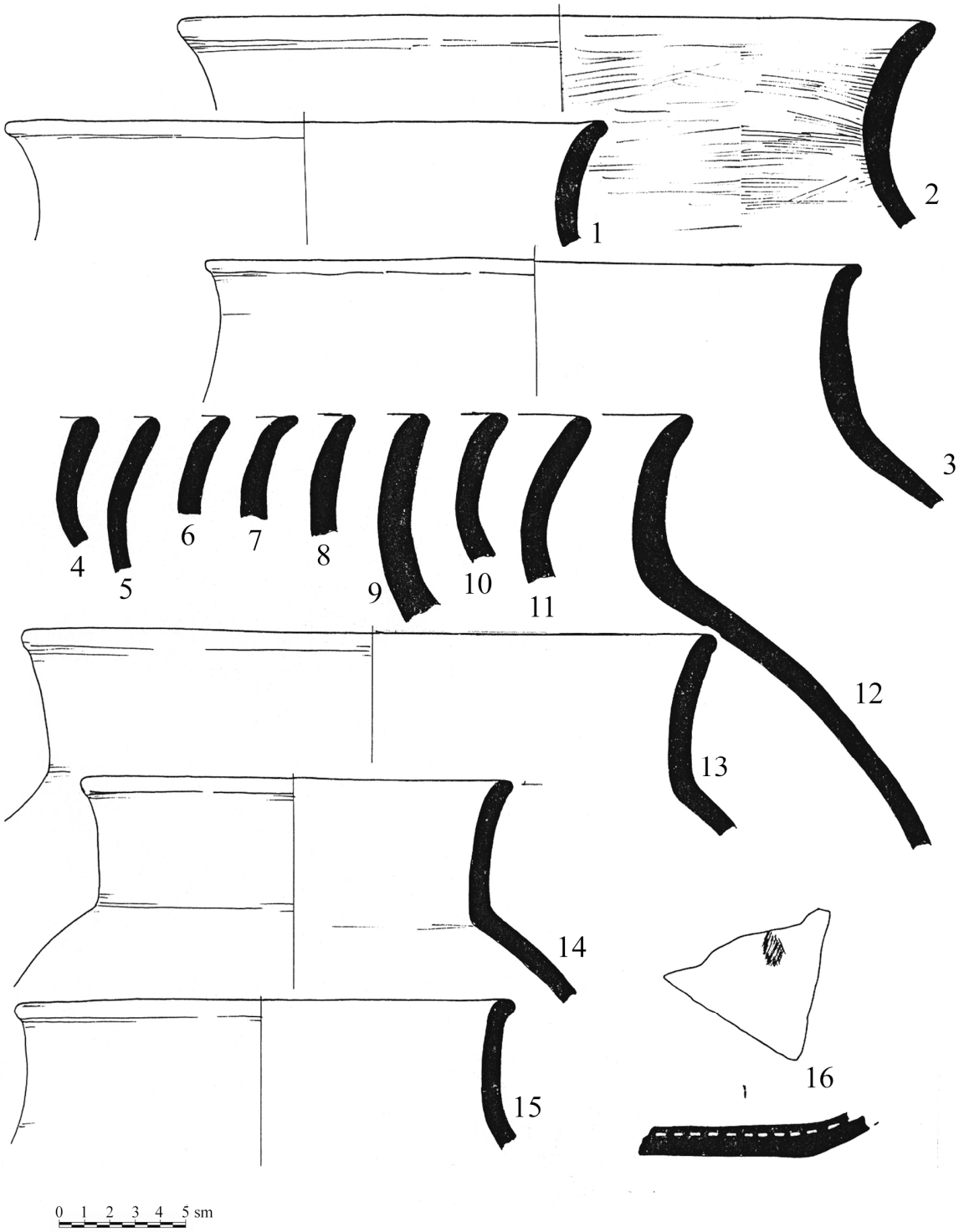

Plate III

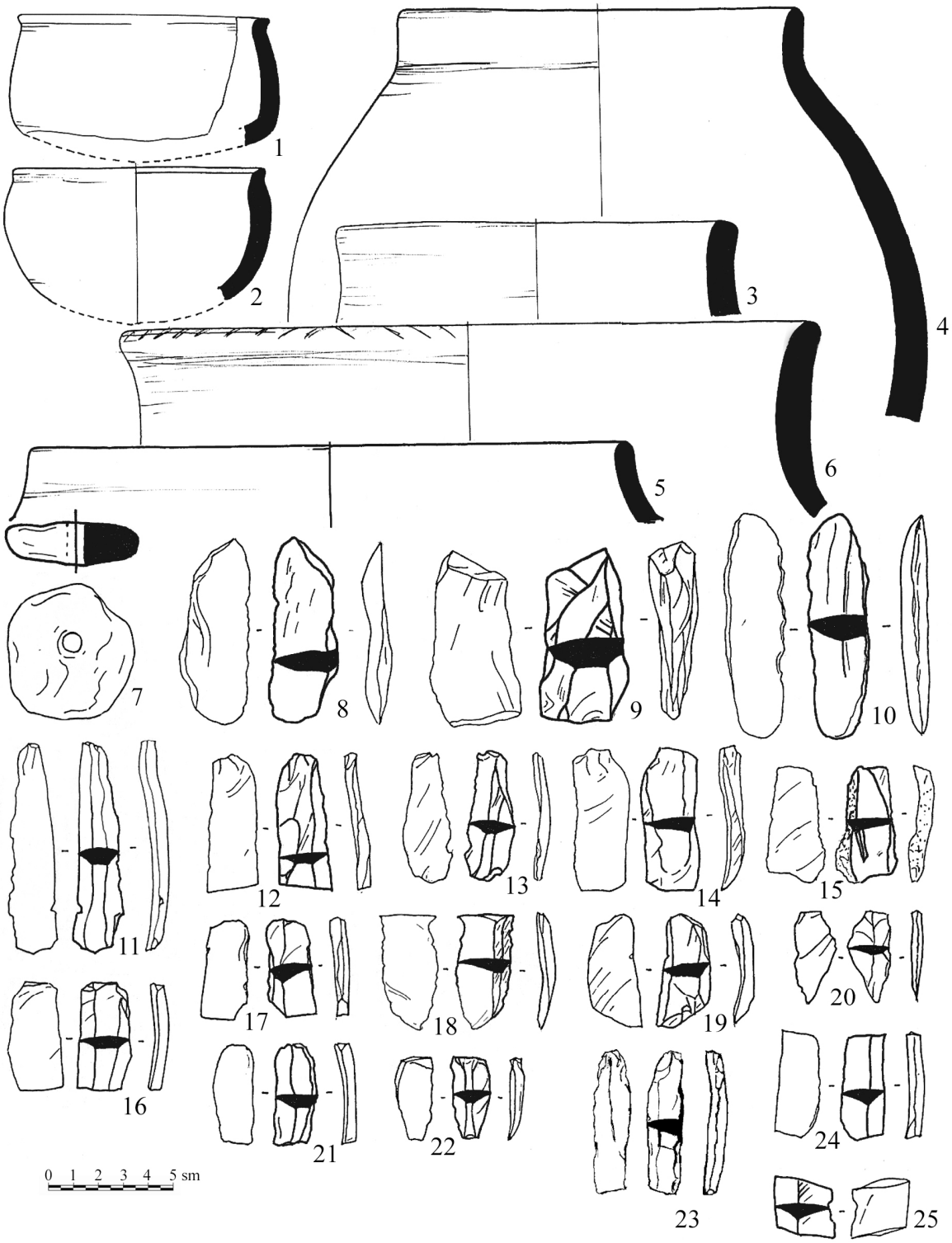

Plate IV

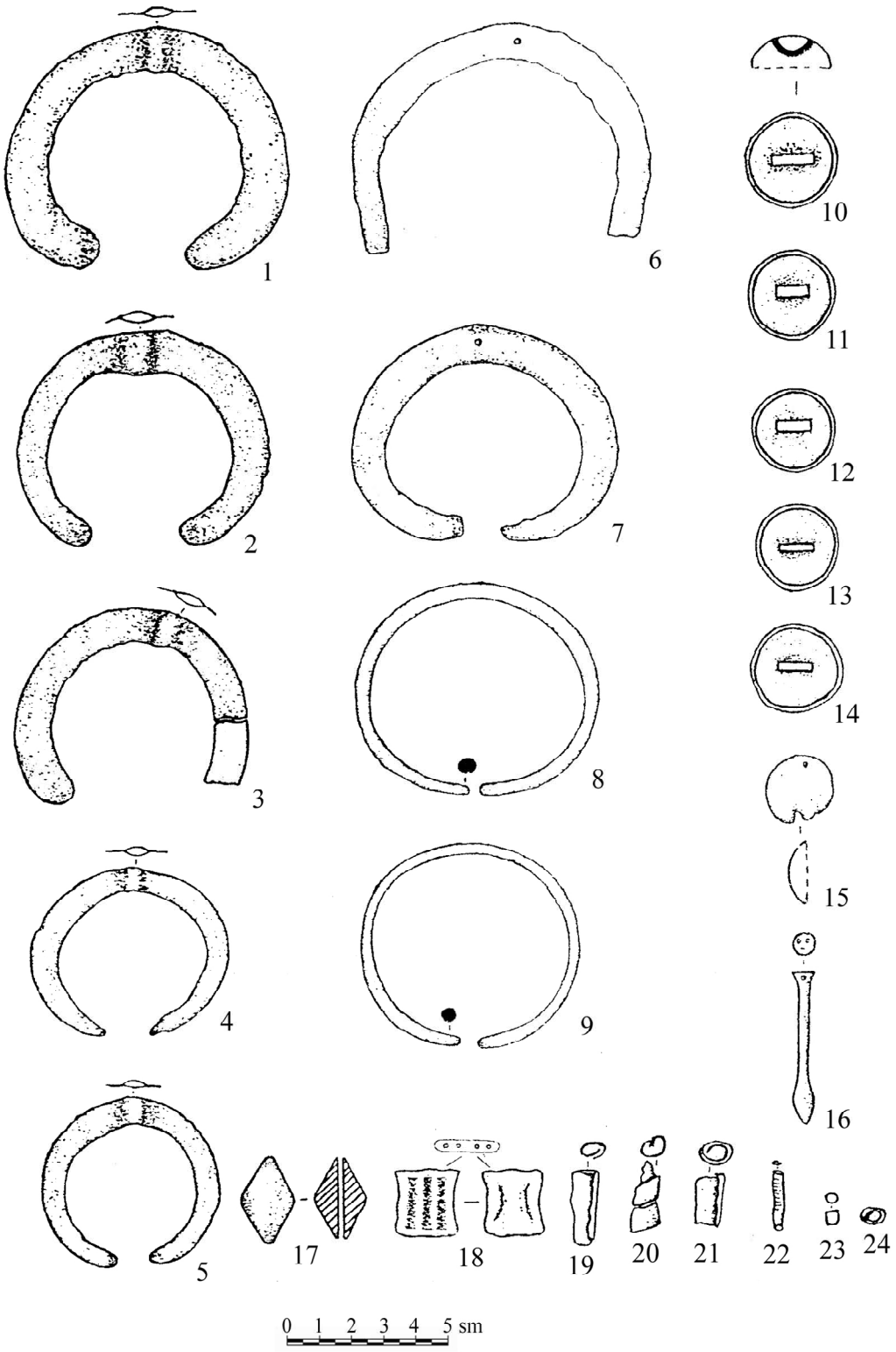

Plate V

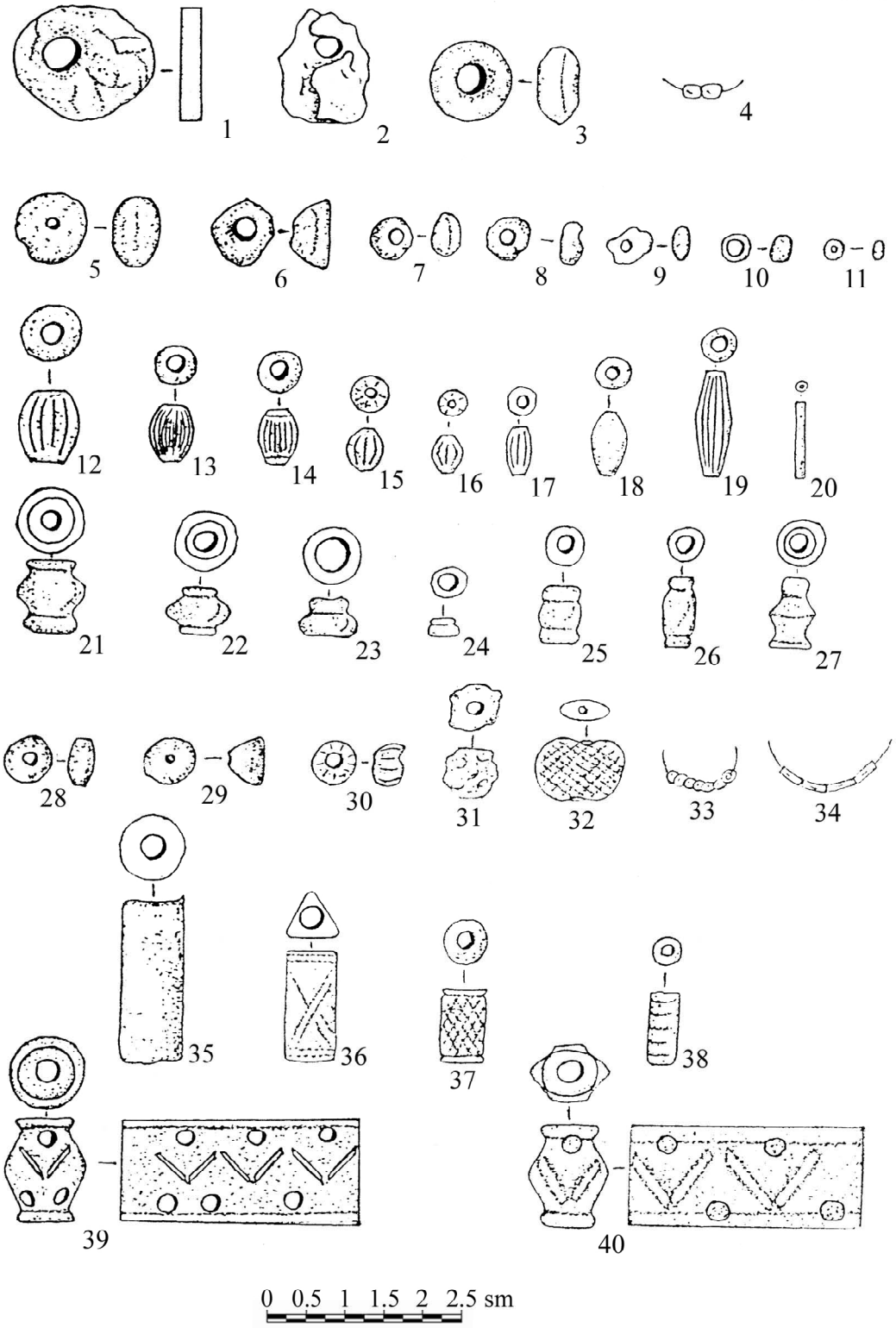
1
2
3
4
5
6
7
8
9
10
11
12
13
14
15
16
17
18
19
20
21
22
23
24
25
26
27
28
29
30
31
32
33
34
35
36
37
38
39
40
0 0.5 1 1.5 2 2.5 sm

Plate VI

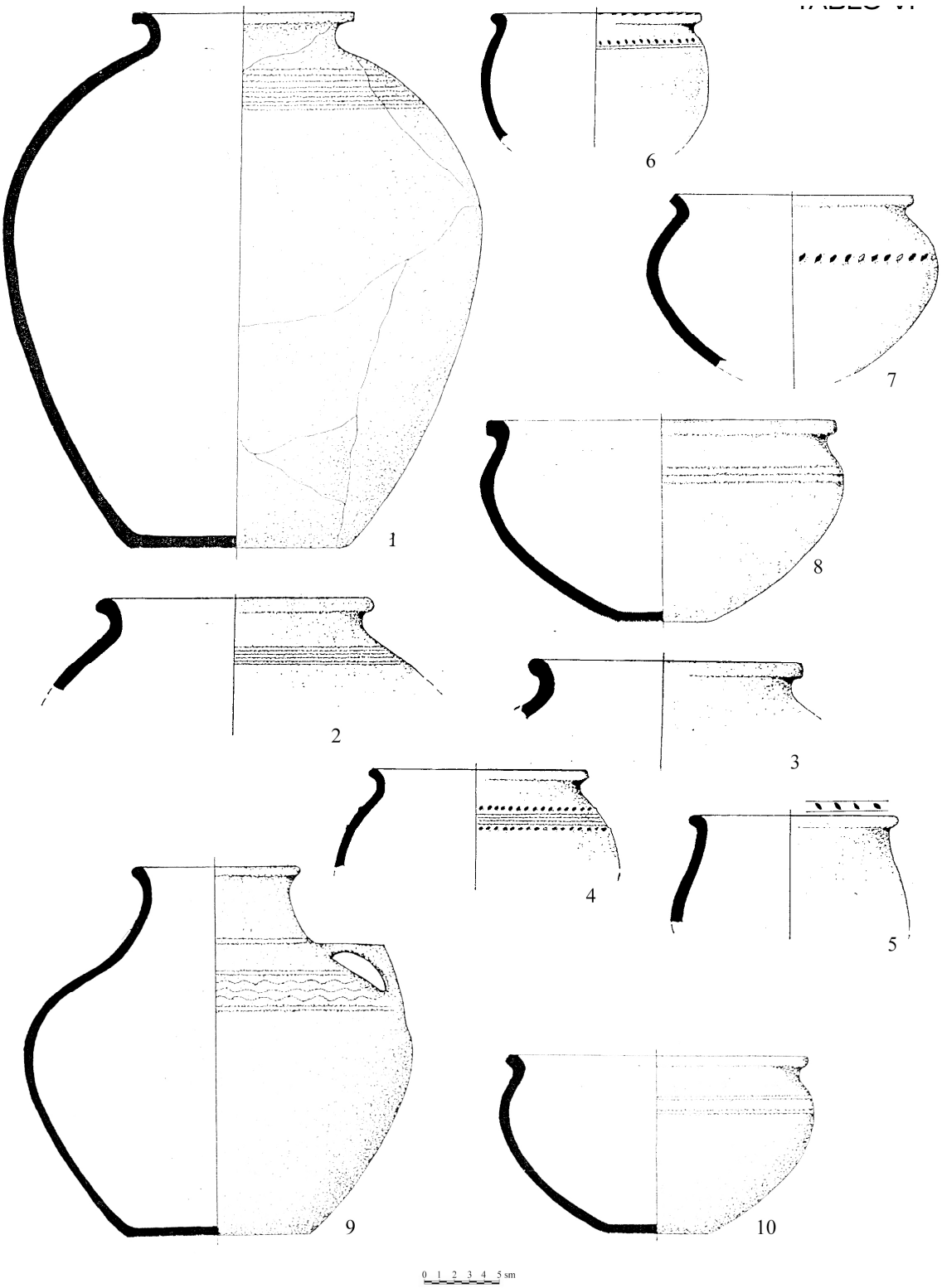

Appendix I

Site Name	Clay Temperature	Munsell Code	Munsell Name
Agili-Dere	Un-fired	10 YR 5/3	Brown
	700	5 YR 5/6	Yellowish Red
	800	5 YR 5/6	Yellowish Red
	900	2.5 YR 5/8	Red
	1000	2.5 YR 5/6	Red

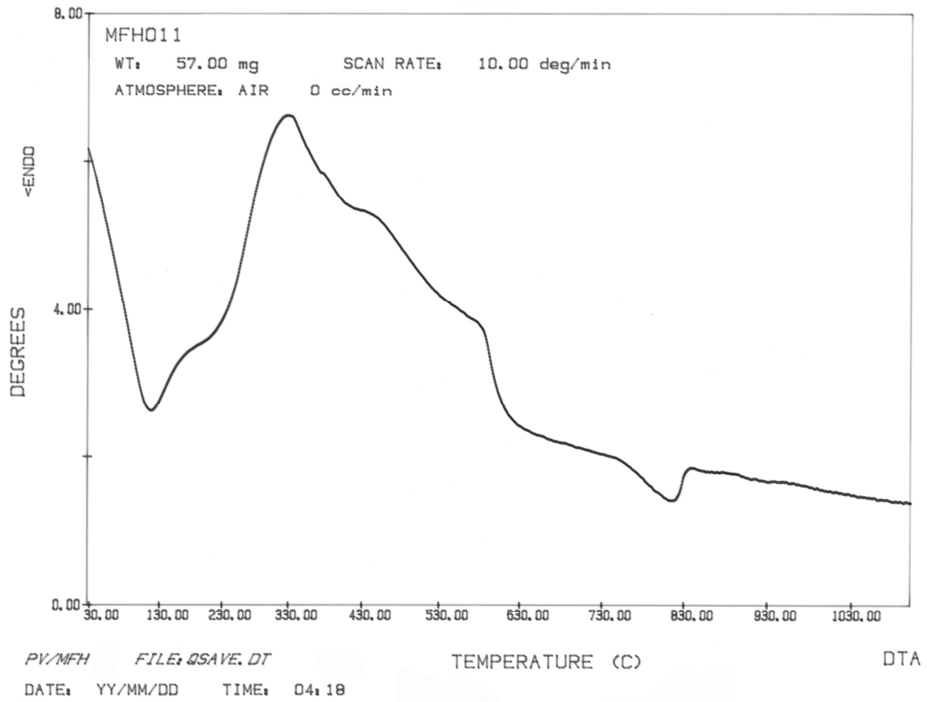

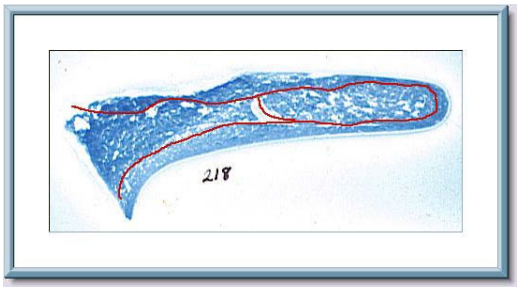

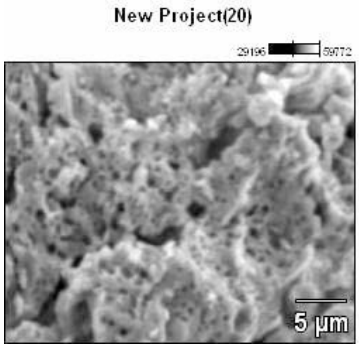

VII. Inventory of Artefacts

	KP	Type of Site	Material	Find	Quadrat No.	Comment
1	358	settlement	ceramic	jug	VI-VII	Grave 1
2	358	settlement	ceramic	jug	VI-VII	Grave 1
3	358	settlement	ceramic	cooking-pot	VI-VII	Grave 1
4	358	settlement	ceramic	cooking-pot	VI-VII	Grave 1
5	358	settlement	ceramic	jug	VI-VII	Grave 1
6	358	settlement	ceramic	jug	VI-VII	Grave 1
7	358	settlement	ceramic	cooking-pot	VI-VII	Grave 1
8	358	settlement	ceramic	jug	VI-VII	Grave 1
9	358	settlement	paste	bead	VI-VII	Grave 1 (124 beads)
10	358	settlement	stone	bead	VI-VII	Grave 1 (5 beads)
11	358	settlement	agate	bead	VI-VII	Grave 1 (53 beads)
12	358	settlement	bronze	bead	VI-VII	Grave 1 (38 beads)
13	358	settlement	bronze	bracelet	VI-VII	Grave 1
14	358	settlement	bronze	bracelet	VI-VII	Grave 1
15	358	settlement	bronze	necklace	VI-VII	Grave 1
16	358	settlement	bronze	necklace	VI-VII	Grave 1
17	358	settlement	bronze	necklace	VI-VII	Grave 1
18	358	settlement	bronze	necklace	VI-VII	Grave 1
19	358	settlement	bronze	necklace	VI-VII	Grave 1
20	358	settlement	bronze	necklace	VI-VII	Grave 1
21	358	settlement	bronze	necklace	VI-VII	Grave 1
22	358	settlement	bronze	necklace	VI-VII	Grave 1
23	358	settlement	bronze	button	VI-VII	Grave 1
24	358	settlement	bronze	button	VI-VII	Grave 1
25	358	settlement	bronze	button	VI-VII	Grave 1
26	358	settlement	bronze	button	VI-VII	Grave 1
27	358	settlement	bronze	button	VI-VII	Grave 1
28	358	settlement	bronze	button	VI-VII	Grave 1
29	358	settlement	bronze	bead	VI-VII	Grave 1
30	358	settlement	bronze	bead	VI-VII	Grave 1
31	358	settlement	bronze	bead	VI-VII	Grave 1
32	358	settlement	bronze	bead	VI-VII	Grave 1
33	358	settlement	bronze	bead	VI-VII	Grave 1
34	358	settlement	bronze	bead	VI-VII	Grave 1
35	358	settlement	ceramic	jug	VI-VII	Grave 2
36	358	settlement	ceramic	bowl	VI-VII	Grave 2
37	358	settlement	ceramic	sherd	1	
38	358	settlement	ceramic	sherd	1	
39	358	settlement	ceramic	sherd	1	
40	358	settlement	ceramic	sherd	1	
41	358	settlement	ceramic	sherd	1	

42	358	settlement	ceramic	sherd	1	
43	358	settlement	ceramic	sherd	1	
44	358	settlement	ceramic	sherd	1	
45	358	settlement	ceramic	jug	1	
46	358	settlement	ceramic	sherd	10	
47	358	settlement	ceramic	sherd	1	
48	358	settlement	ceramic	bowl	1	
49	358	settlement	ceramic	jug	1	
50	358	settlement	ceramic	kuza	1	
51	358	settlement	ceramic	jug	1	
52	358	settlement	ceramic	sherd	1	
53	358	settlement	ceramic	jug	1	
54	358	settlement	ceramic	jug	1	
55	358	settlement	ceramic	jar	1	
56	358	settlement	ceramic	jar	1	
57	358	settlement	ceramic	jar	1	
58	358	settlement	ceramic	jar	1	
59	358	settlement	ceramic	jar	1	
60	358	settlement	ceramic	jar	1	
61	358	settlement	ceramic	jug	1	
62	358	settlement	ceramic	jug	1	
63	358	settlement	ceramic	jug	1	
64	358	settlement	ceramic	platter	1	
65	358	settlement	ceramic	jug	1	
66	358	settlement	ceramic	platter	1	
67	358	settlement	ceramic	kuza	1	painted decoration
68	358	settlement	ceramic	jug	1	
69	358	settlement	ceramic	platter	1	
70	358	settlement	ceramic	jug	1	
71	358	settlement	ceramic	kuza	1	
72	358	settlement	ceramic	sherd	1	
73	358	settlement	ceramic	sherd	1	
74	358	settlement	ceramic	bowl	1	
75	358	settlement	ceramic	bowl	1	
76	358	settlement	ceramic	jug	1	
77	358	settlement	ceramic	jug	1	
78	358	settlement	ceramic	jug	1	
79	358	settlement	ceramic	jug	1	
80	358	settlement	ceramic	jug	1	
81	358	settlement	ceramic	jug	1	
82	358	settlement	ceramic	jug	1	
83	358	settlement	ceramic	jug	1	
84	358	settlement	ceramic	jug	1	
85	358	settlement	ceramic	jug	1	
86	358	settlement	ceramic	jug	1	

87	358	settlement	ceramic	jug	1	
88	358	settlement	ceramic	jug	1	
89	358	settlement	ceramic	jug	1	
90	358	settlement	ceramic	jug	1	
91	358	settlement	ceramic	bowl	1	
92	358	settlement	ceramic	jug	1	
93	358	settlement	ceramic	jug	1	
94	358	settlement	stone	spindle whorl	1	
95	358	settlement	flint	cutting tool	1	
96	358	settlement	flint	cutting tool	1	
97	358	settlement	flint	cutting tool	1	
98	358	settlement	flint	cutting tool	1	
99	358	settlement	flint	cutting tool	1	
100	358	settlement	flint	cutting tool	1	
101	358	settlement	flint	cutting tool	1	
102	358	settlement	flint	cutting tool	1	
103	358	settlement	flint	cutting tool	1	
104	358	settlement	flint	cutting tool	1	
105	358	settlement	obsidian	cutting tool	1	
106	358	settlement	obsidian	cutting tool	1	
107	358	settlement	obsidian	cutting tool	1	
108	358	settlement	obsidian	cutting tool	1	
109	358	settlement	obsidian	cutting tool	1	
110	358	settlement	obsidian	cutting tool	1	
111	358	settlement	obsidian	cutting tool	1	
112	358	settlement	obsidian	cutting tool	1	