2006/216

AN ARCHAEOLOGICAL EVALUATION AT AVON VALLEY COUNTRY PARK, SALTFORD, BATH AND NORTH EAST SOMERSET

for Mr J. Douglas

Peter Davenport BA, M.Phil, FSA, MIFA
Bath Archaeological Trust Ltd.,
Unit 13, Brassmill Enterprise Centre,
Brassmill Lane,
Bath BA1 3JN

May 2003

Mon BW 11813
Event BW 2874.
Source BW 435-96.

Summary
Five trenches were dug to evaluate the archaeological potential of land in the Avon Valley Country Park, Saltford and to assess the effect of development proposals on it. The trenches were placed on the sites of new stables (trench 1), a new pond (trench 2),a new building (trench3) a coach park (trench 4) and another pond (trench 5). Little is known of the archaeological background, but important Roman and Saxon finds occur within a kilometre. A small collection of Roman pottery was found when a pipe trench was dug in 1980 in the same field as trench 4.

The trenches revealed a history of alluviation over lias clay with some thin traces of the gravel terrace surviving at the lowest level over the lias clay. All trenches except 5 showed a layer of alluvial silty clay up to 60 cm thick under the top soil with what appears to be a buried soil under it. In trenches 3 and 4 the buried soil appears to interrupt the alluviation which is not therefore all of one episode. Equally the alluvium may not be the same episode across trenches. However, a possible and tentative model of the alluviation sequence and possible dates has been attempted. This relies on the archaeological deposits in trench 4 and the correlation of the layers in trench 3 to them.

In trench 4 the base of a broad stone wall was found with a pitched stone surface on the north and an unpitched paving on the south. These have been interpreted as the wall and internal and external floors of a small farm building. Finds suggest a late 3rd to 4th century date and the working of metal on or near the site. In trench 3 a spread of stone rubble at a level broadly equivalent to the archaeological horizon in trench 4 is probably an anthropogenic event.

The proposed developments will have no impact on any remains in trenches 1-2 and 5 as none were found. Remains were found in 4 and perhaps 3. Proposal have been put forward and accepted by the developer to excavates less of the overburden away here and lay protective material over the remains prior to construction of the open air coach park proposed for this area.

Contents

Illustrations

AN ARCHAEOLOGICAL EVALUATION AT AVON VALLEY COUNTRY PARK, SALTFORD, BATH AND NORTH EAST SOMERSET

1 Introduction

1.1 Outline

ii. This report details the results of an archaeological evaluation carried out by Bath Archaeological Trust (BAT) at Avon Valley Country Park, Saltford, Bath and North East Somerset (ST6713068590).

iii. The evaluation was carried out in March 2003. Five trial trenches were dug by back hoe excavator under continuous archaeological monitoring

iv. The area evaluated by the trenches amounted to an area of 111.5 square metres, approximately 0.7% of the area threatened by development.

v. The evaluation was carried out in response to a design brief compiled by the County Archaeologist and issued on the 22nd October 2001 (and subsequently updated). The work was commissioned by Michael Swinton, Chartered Town Planner, on behalf of Mr J. Douglas of Avon Valley Country Park (the client).

2 Background

2.1 Project Background

i. Archaeological involvement at Avon Valley Country Park, (AVCP) stemmed from a proposal to improve facilities including new stables, car and coach parking and the creation of new ponds.

ii. AVCP is a visitor attraction open in the summer months and is stocked with domestic and other animals. There are play barns, picnic areas, toilets and car parks.

2.2 The Site and its Situation

i. AVCP is situated on the Avon Valley flood plain south of the river and north east of Keynsham town centre, but actually in Saltford civil parish (figure 1). Its northern boundary is the river itself. The underlying geology is blue lias clay capped with alluvial clays and some alluvial sands and gravels.

ii. It is, therefore, topographically flat and low lying, with no appreciable relief, straddling the 15mOD contour line.

iii. The site is not subject to special designation.

2.3 Archaeological and Historical Setting

i. Keynsham and Saltford are both of at least medieval origin, Saltford being a small settlement around a ford of the Avon with a probably mid 12th century hall still standing at the old centre of the village. Scattered Roman remains have been found in the near vicinity of the village, but not in the settlement itself.

ii. Keynsham was an important medieval centre benefitting from its position between Bristol and Bath. It had a large Benedictine monastery and the Abbot held a great amount of land, rural and urban. The town was a thriving cloth town and built itself a fine parish church.

iii. Prehistoric remains are scarce and the closest is a barrow on the north side of the river at Bitton.

iv. Roman remains are better known. A small villa at Durley Park is complemented by the better known and palatial villa at Somerdale. It appears likely that remains discovered on Keynsham Hams may represent a small Roman town, but excavation has been limited.

v. A pagan Saxon burial ground is marked at Avon Farm on Saltford Mead on the 1:25000 OS map.

vi. None of these sites is closer than a kilometre to the study site, but make it clear that archaeological remains would not be unexpected in the vicinity.

vii. There is one find made on the site prior to the present study. This is B&NES SMR no BN5712, a collection of Roman pottery, only 10 sherds, found during the monitoring of a pipe trench in 1980, apparently by the then Avon County Archaeologist. This was at ST 671686, between 50 and 100 yards east of trench 4 (see below).

viii. In addition, a local researcher, Mr Robert Whitaker, has made a case for the route of a Roman road ro pass through the site where the pottery was found, the road being that from Charterhouse to Bitton and beyond to Gloucester.

3. The Investigation

3.1 Project Aims and Objectives

i. To determine the location, extent, date, character, condition, significance and quality of any buried archaeological remains which are liable to be threatened by the proposed development.

ii. To ascertain the degree of truncation of buried deposits and the degree of preservation of deposits filling any negative features.

iii. To use the results of the evaluation to produce a deposit model for the site as a whole.

iv. To assess the environmental potential of the site through a programme of sampling and study of any appropriate materials recovered during the evaluation.

v. To produce a written report on the project with full publication if deemed appropriate.

3.2 Methodology

i. The Project Manager was Mark Beaton who also acted as Project Officer. He was assisted on site by Marek Lewcun.

ii. Five trenches were agreed with the B&NES Archaeological Officer, positioned in areas that were under potential threat from the proposed developments.

iii. The trenches were opened by machine using a toothless bucket under constant supervision by the project officer. Excavation was continued by hand when archaeological layers or suspected ones were recognised.

iv. All deposits revealed were recorded using elements of the BAT recording system of complementary written, drawn and photographic records. All records and registers have been fully cross-referenced.

v. The trenches were of various sizes, as follows: trench 1 was 10m by 1.8m; trench 2 was 15m by 1.8m; trench 3 was 14m by 1.8m and angled in the middle; trench 4 was 20m by 1.8m and was widened to 2.9m toward the south end; trench 5 was 4m by 1.8m (see fig. 2).

vi. The test pits were backfilled and re-instated by machine.

vii. All artefacts recovered were bagged on site in accordance with current UKIC guidelines and were transferred to Bath Archaeological Trust's offices for analysis.

4. Results

4.1 Stratigraphic Analysis

4.1.1 Trench 1 (figs 2, 4 and 6)

i. Context 101 was 20cm of grey brown loam topsoil, generally across the trench. sealing everything beneath.

ii. Below this was context 102,again covering the whole trench. This was a slightly silty, very clean yellow clay, interpreted as alluvial deposits. This appeared homogeneous despite a thickness of up to 60cm. Its base lay on the slightly undulating surface of the underlying strata 103 and 104, itself presumably so shaped by flood currents.

iii. Context 103 was the sand and gravel occurring in lenses and pockets in the surface of 104, lias clay. This was limestone gravel in a brown sandy matrix. At the south east end of the trench, context 3 was more continuous and up to 15cm thick.

4.1.2 Trench 2 (figs 2, 3 and 7)

i. Context 201 was 20cm of grey brown loam topsoil, generally across the trench. sealing everything beneath.

ii. Context 202 was the equivalent to context 102 in trench 1 but was a much stickier yellow clay up to 105cm thick. That this was an alluvial deposition is supported by the existence of

iii. Context 203, sealed by context 202; this appears to be a buried soil. It varied between 15 and 30cm thick and contained a fine root network . There was evidence of

bioturbation. The context was a very dark brown gritty silt with some lias limestone slabs. There were no other finds or inclusions. There is a possibility that this is generally equivalent to 304 and 405, but the distance is so great that no certain correlation can be made.

iv. Context 204 was the equivalent of 103 in trench 1, a rusty brown clay and gravel intermitent layer which became more continuous at the NW end of the trench and was up to 25cm thick.

v. This overlay the lias clay, context 205. This was mechanically excavated at one end of the trench to a depth of 1.5m to confirm its identification. As with the other trenches the top of natural undulated over widths of about one metre and depths of 15 to 20 cm.

4.1.3 Trench 3 (figs 2, 3 and 8)

i. Context 301 was 30 cm of scalpings

ii. Context 302 below this was 10cm of grey silty clay topsoil, generally across the trench. sealing everything beneath.

iii. Below this was context 303, a mid brown, silty clay 20cm thick.

iv. Context 304 was a grey brown silty clay under this, 25cm thick.

v. At the NE end of the trench context 304 contained a spread of lias limestone rubble which extended 3m into the trench across its whole width. This is thought to be a possible equivalent to the structures found in trench 4.

vi. Below this came 305, a red brown silty clay with some grit. This is assumed to be a component of the river terrace deposits but absent in the other trenches.

vii. At the bottom of the sequence came 306, river terrace gravel proper.

4.1.4 Trench 4 (figs 2, 4 and 10-13)

i. Context 401 was 30cm of mid grey brown loam topsoil, generally across the trench. sealing everything beneath.

ii. Context 402 was a yellowish brown clayey silt below 401 and 35cm thick

iii. Context 403 was a man made surface of pitched, thin, lias limestone slabs. It butted 404. 403 was under 402 and laid on to 408.

iv. Context 404 was a lias limestone wall represented by two rows of facing blocks and a rubble core only one course high. It was laid on the lower facies of 402 and was butted by 403 and 406. It was about 6ocm wide.

v. Context 405 was a paving of lias rubble laid flat, not pitched, laid on the same surface as 403 and 404. It butted against 404. It may have been broadly equivalent to the rubble in layer 304.

vi. 406 was a U-section linear cut feature running across the trench. When recognised it had lost a few centimetres of its height to machining. But appeared to be about 70cm across at the top and was about 35 cm deep. It contained some flat stones similar to the pitching in its top fill.. It ran parallel to the wall 404 and may originally have formed the boundary and acted as a drain for the structures to the south. It was cut into 408 and 409 (see below).

vii. 407 was the grey brown charcoally loam fill of 406.

viii. 408 was the slightly more yellow-brown clayey silt that was otherwise very similar to 402 and is found under it. It forms the substrate that 403, 404, and 405 were laid on and into which 406 was cut.

ix. 409 is an area of mid brown clayey silt between 402 and 408 in vicinity of gully 406 and through which it appears to be cut. It may have been a buried soil. 409 was definitely not present over or under 403, 404, 406. It may therefore be contemporary with them and represent an exterior old ground surface.

x. 410 is the lias clay. The sandy gravels were not met with here.

4.1.5 Trench 5 (fig 2, 3 and 9)

i. This was smaller trench than the others, dug next to an orchard as near as possible to the site of a proposed new pond. The orchard made it necessary to place the trench just east of the pond site itself.

ii. 501 was the top soil, here ploughed, a grey-brown silty loam 20cm thick.

iii. 502 was an orange-brown silty clay 50cm thick.

iv. 503 was a yellow-brown clay, 60 cm thick. These were both alluvial deposits.

v. These layers lay on the blue lias clay natural, 504

vi. No artefacts or buried soils or structures were recovered or seen in this trench.

5. Dating

5.1 Trenches 1-3 and 5.

i. There was no datable material in these trenches, other than 20th century debris in the top soil. However, cross-relating the layers to the horizons in trench 4 allows some broad suggestions to be made. Caveats on the long distance between most trenches and no 4 are understood.

ii. The yellow and yellow brown and red brown alluvial clays (102, 202, 303 and 502/3) are unlikely to be the result of one deposition episode given their thickness. The rubble spread in 304, almost certainly anthropogenic, indicates this. The recognition of an upper and lower facies (at least) in the equivalent phase in trench 4 (layers 402 and 408), separated by an occupation phase, shows this clearly.

5.2 Trench 4

i. The discovery of the remains of a building in trench 4, interpreted below as probably part of a farmstead, shows the use of the floodplain not just for agriculture, such as watermeadow and pasture, but for settlement. This ties in with the evidence from the Hams, and suggests a hiatus in active alluviation. This hiatus would be dated to the 3rd and 4th century on the ceramic and coin evidence retrieved from the building here. Closer dating is not possible on the evidence.

ii. Thus there is evidence for alluviation pre 4th century, a hiatus and then a resumption of alluviation post- 4th century. The burials at Avon Farm, if properly dated to the pagan Saxon period, whatever that means in this area, suggests alluviation did not start again until the 6th or 7th century (on the assumption that burials would not be placed in seriously flood-prone ground). This is a useful, if limited and tentative, contribution to the history of alluviation in this part of the Avon Valley.

6 Finds

6.1 Coins

i. Two small copper alloy coins, both badly corroded, were not inconsistent with a late 3rd or 4th century date.

ii. Their find spots suggest they were lost during or just after the life of the pitched stone surface 403 as they were found in 402 as it was being removed from the top of 403..

6.2 Pottery

i. A single sherd of 4th century Oxfordshire colour coated ware with impressed rosette decoration formed part of a small ceramic assemblage. Single fragments from two mortaria, both probably Oxfordshire ware, one with surviving trituration grits, fitted this broad date range as did fragments of a black burnished ware Category 1 (BB_1) bowl with pronounced bead rim and flange.

ii. The stamped bowl and the mortaria fragments suggest a settlement fully participating in Roman culture and distribution patterns, hardly a surprise in the 4th century in this area. The supply of pottery from the Oxfordshire kilns and from the Dorset industries is equally to be expected in this area.

iii. The sherds were found in the pitched stone layer 403 and the layer above it 402 and in the fill, 407, of gully 406.

6.3 Other finds

i. A fragment of copper alloy slag, a 195 gram lump of lead and a much smaller piece of lead with copper alloy accretions suggest the sort of small scale metal working that you might expect on a farmstead. As with the pottery, the lead was found in 402 and the

slag in 407. This tends to support the contemporaneity of the features indicated by the stratigraphy.

6.4 Faunal Analysis

i. Six fragments of animal bone were found in the ditch fill 407.

ii. Two were pieces of rib of sheep size but too fragmentary to identify. The larger piece has been scored by a knife and snapped across.

iii. One piece was a fragment of the socket of a shoulder blade, again probably sheep and another fragment seemed likely to be a part of this.

iv. A broken fragment of skull seemed to be part of the temporal bone of a sheep sized creature incorporating part of the upper jaw joint.

v. A sheep metatarsal was broken at both ends to extract marrow but no other butchery marks were visible.

7 Discussion

7.1 Prehistoric

i. There is no evidence of prehistoric activity in the study area and no archaeological deposits or features from this period were observed.

ii. The site would therefore, on the evidence, have little potential for further investigation into this period, and no deposits of this period are threatened by the proposed developments. However, the position and number of the trenches were not chosen to evaluate the whole acreage of the AVCP but to evaluate the potential of those smaller areas threatened by specific developments on their sites. Thus large areas of the flood plain away from these threats remain unevaluated.

7.2 Romano-British

i. Little was found across the AVCP in general, but the building in trench 4, the rubble spread in trench 3 (and perhaps trench 2) and the find of pottery in 1980 just east of trench 4 (B&NES SMR BN5712 indicate that Romano-British occupation is to be found in the area of the new coach park and overspill parking here, including masonry buildings and evidence of craft/manufacture. This seems to be a localised part of a widespread settlement of the valley bottom in late Roman times.

ii. The identification of a Roman and perhaps earlier buried soil in three of the trenches, covered by alluvial clay, suggests that there is a buried landscape of this date surviving, in places at least, on the valley floor.

iii. The site therefore has great potential for further investigation into the settlement and alluviation history of the valley floor in late antiquity. The quality of the remains is not especially high here, in terms of status or complexity, but single period rural sites, as this appears to be can give good returns from the right questions. In particular, the

question of the road network and the relationship of settlements of all orders to it is of interest.

7.3 Post-Roman & Saxon/Norman

i. There is no evidence of activity of this period in the study area and no archaeological deposits or features from this period were observed. However, the valley itself has high potential. The question of the dating of the alluviation phases and their effect on settlement and land use is of great importance. If Roman sites are buried by alluvium, then there is a good chance of modern investigation confirming or otherwise their continued use in the post-Roman centuries, as hinted at at Somerdale. Saxon Burial grounds need dating.

7.4 Medieval

i. There is no evidence of activity of this period in the study area and no archaeological deposits or features from this period were observed.

7.5 Post-medieval (pre 19th century)

i. There is no evidence of activity of this period in the study area and no archaeological deposits or features from this period were observed. Standing buildings and land boundaries are as important as excavation, often more so.

8 Impact of Development

i. The only trench with remains that will be affected by the development is no. 4. This and other observations has indicated that there are significant Roman remains in this area. This trench has indicated that the coach park and overspill car park and associated access tracks could have an adverse impact on the buried archaeology.

ii. The threat was essentially that caused by site preparation, the removal of top soil and subsoil to within centimetres of the buried remains and the compressive damage caused by construction traffic.

iii. This threat will be removed by the decision to remove only the top soil, leaving more than 300mm of sub soil over the remains. This will then be covered with non-woven geotextile and graded scalpings. This will enable construction traffic and the public when the work is complete, to pass harmlessly over the site.

9 The Archive

i. The archive for the site will be stored with the Roman Baths Museum, Bath and consists of:

1) All paper records, illustrations and the photographic archive.
2) A copy of the evaluation report.
3) All finds not subjected to the agreed discard policy.

ii The Bath Archaeological Trust site code for the evaluation is AVCP03. The museum accession code is BATRM2003.5.

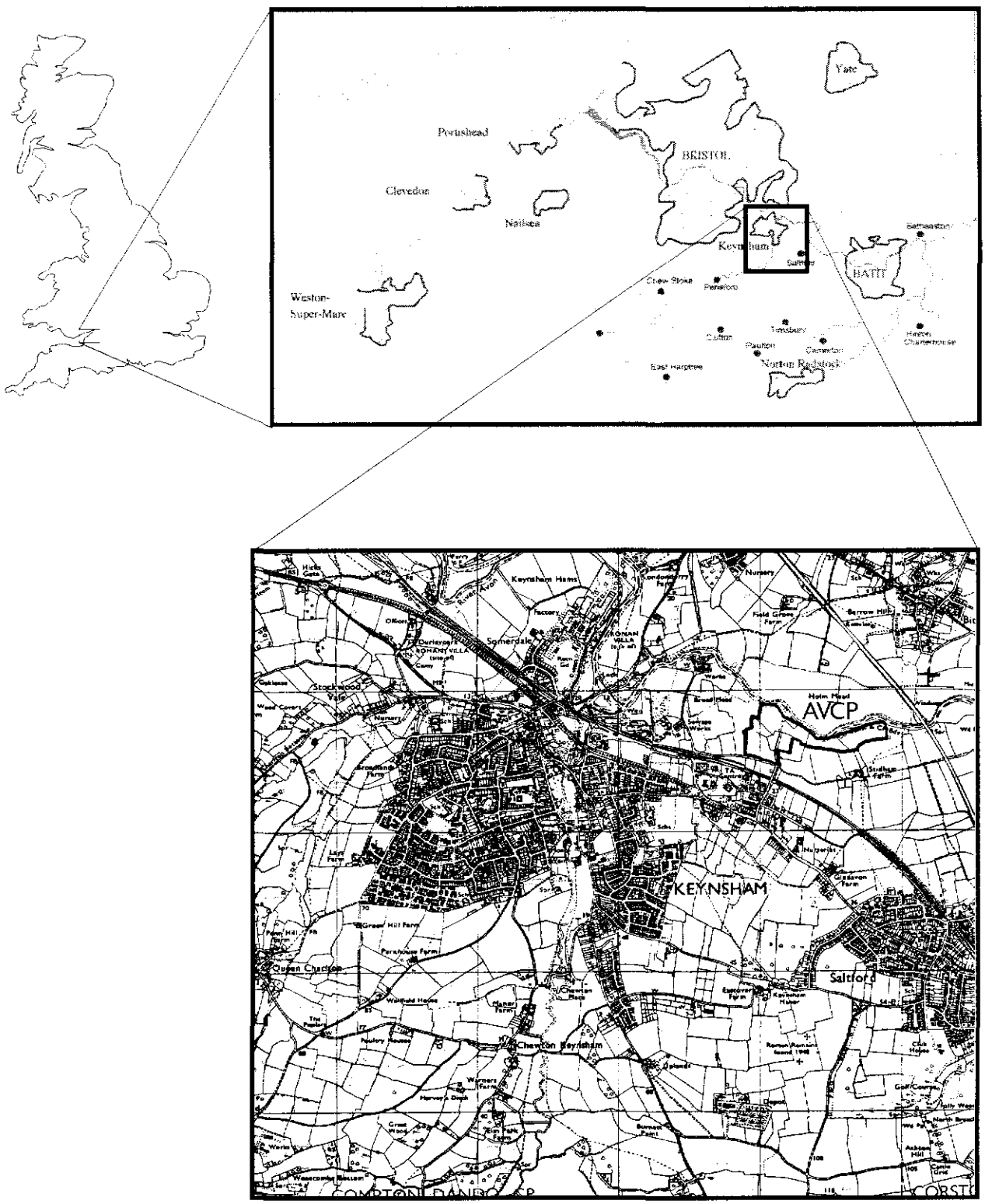

Figure 1. Location plan for Avon Valley Country Park

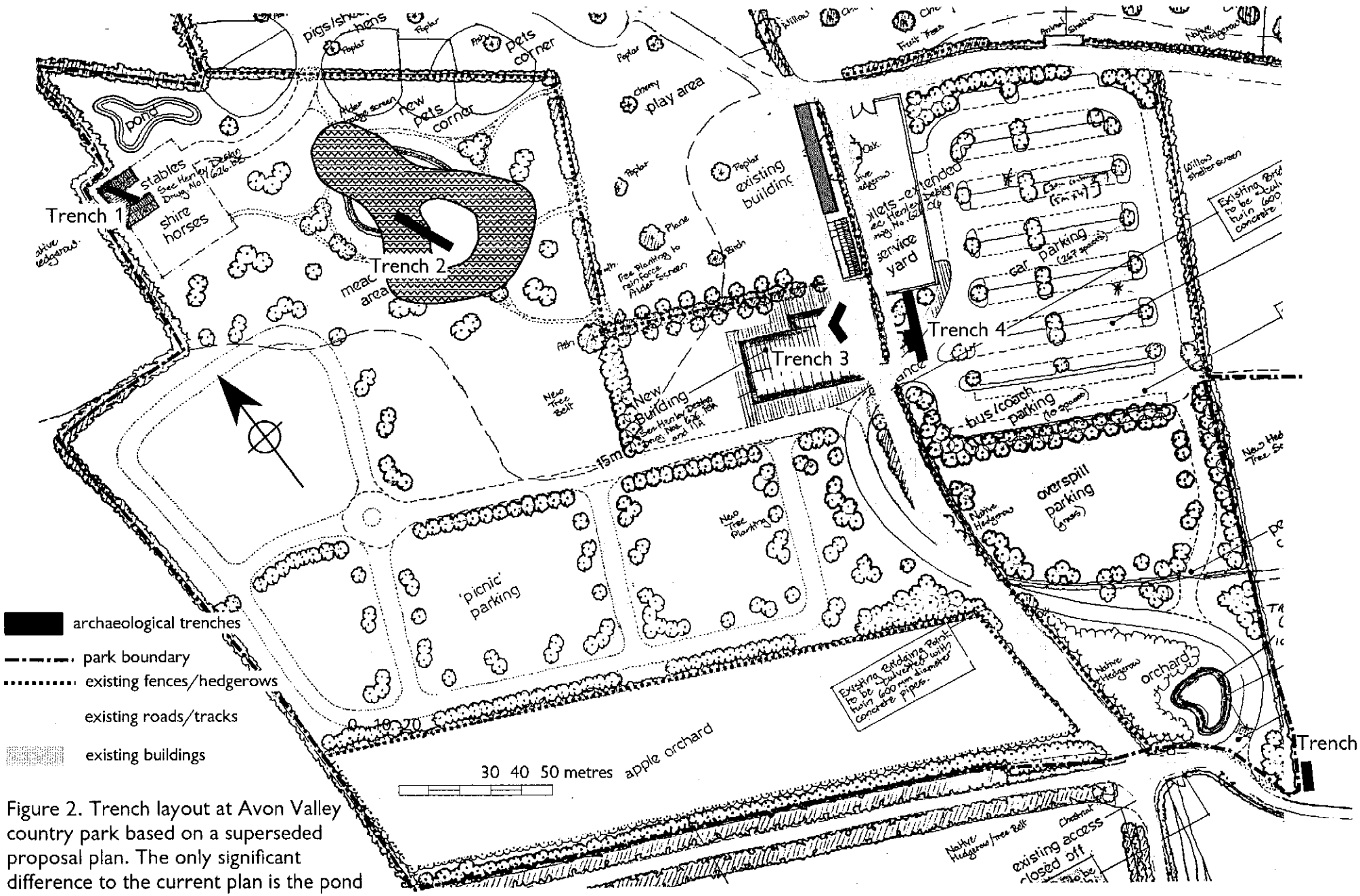

Figure 2. Trench layout at Avon Valley country park based on a superseded proposal plan. The only significant difference to the current plan is the pond by trench 2, which has been added to this plan

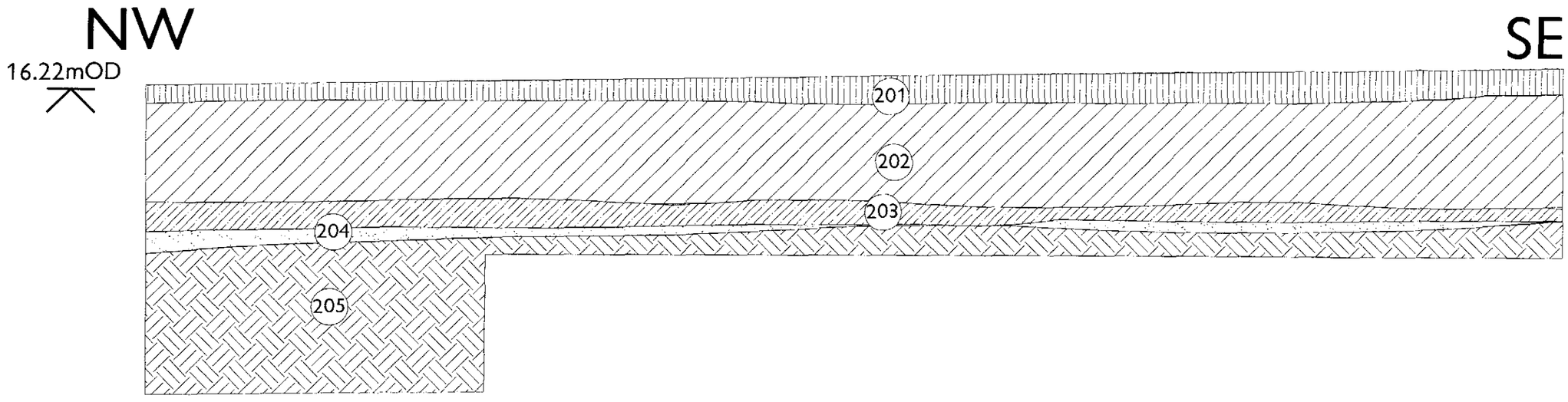

Trench 2

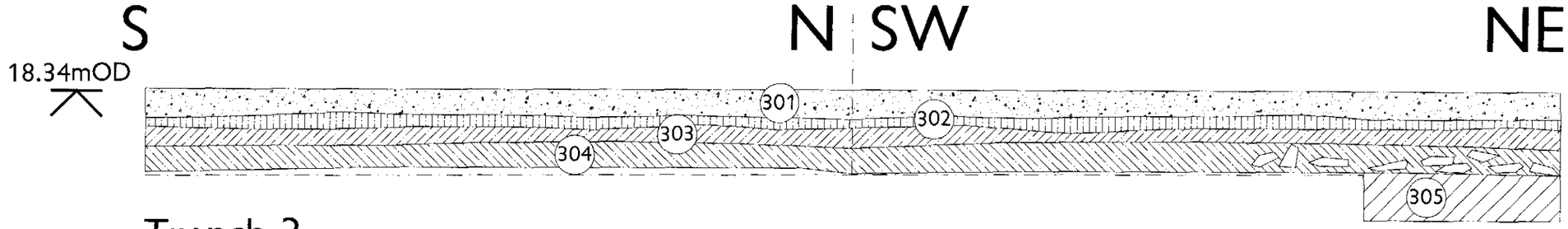

Trench 3

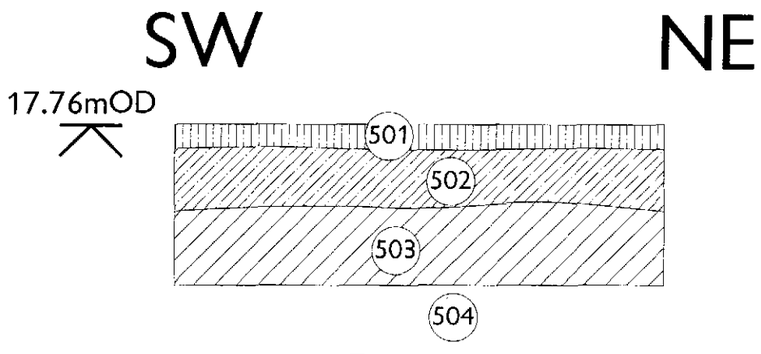

Trench 5

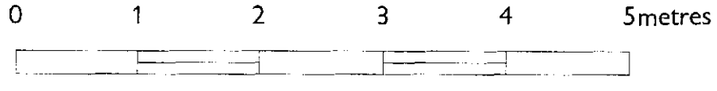

Figure 3.

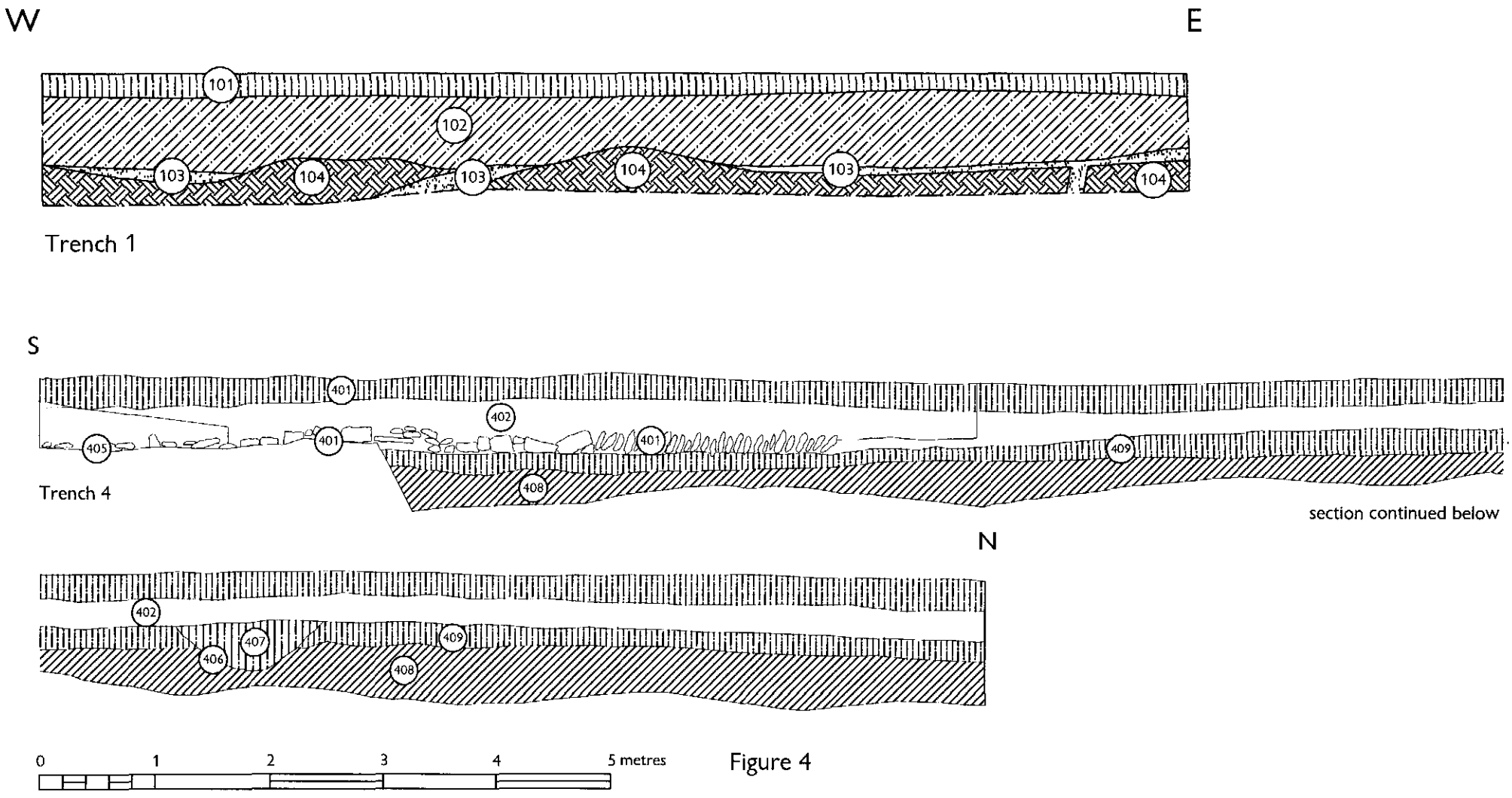
W
E
101
102
103
104
103
104
103
104
Trench 1
S
401
402
405
401
401
409
408
Trench 4
section continued below
N
402
406
407
409
408
0
1
2
3
4
5 metres

Figure 4

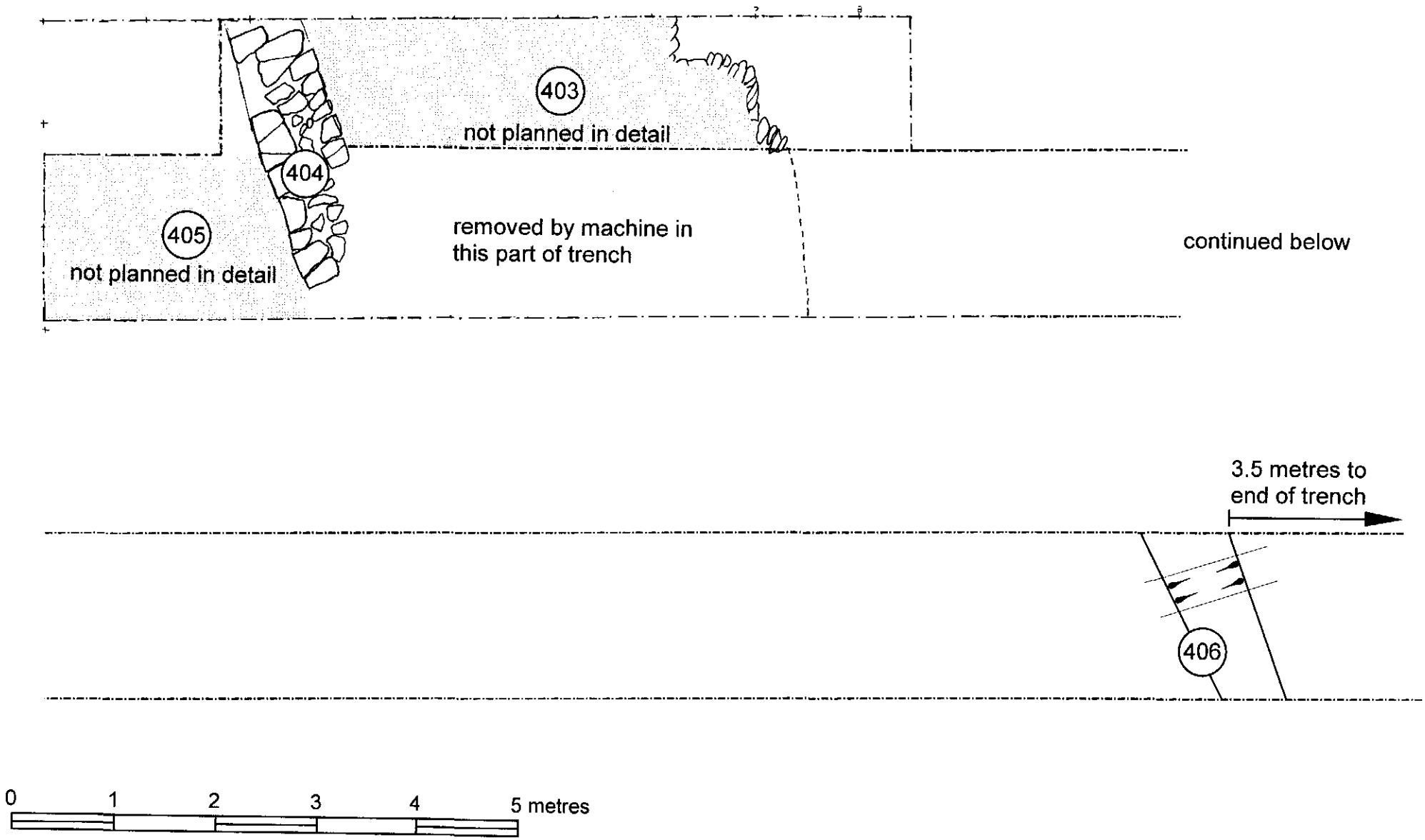

Figure 5. Trench 4 plan

Figure 6. Trench 1 excavated to top of lias clay. An exploratory excavation into the clay is just visible at the front of the photograph.

Figure 7. Trench 2 excavated to the top of the lias clay. The buried soil 203 can be seen as a dark streak at the base of the trench sides under the alluvial clay.

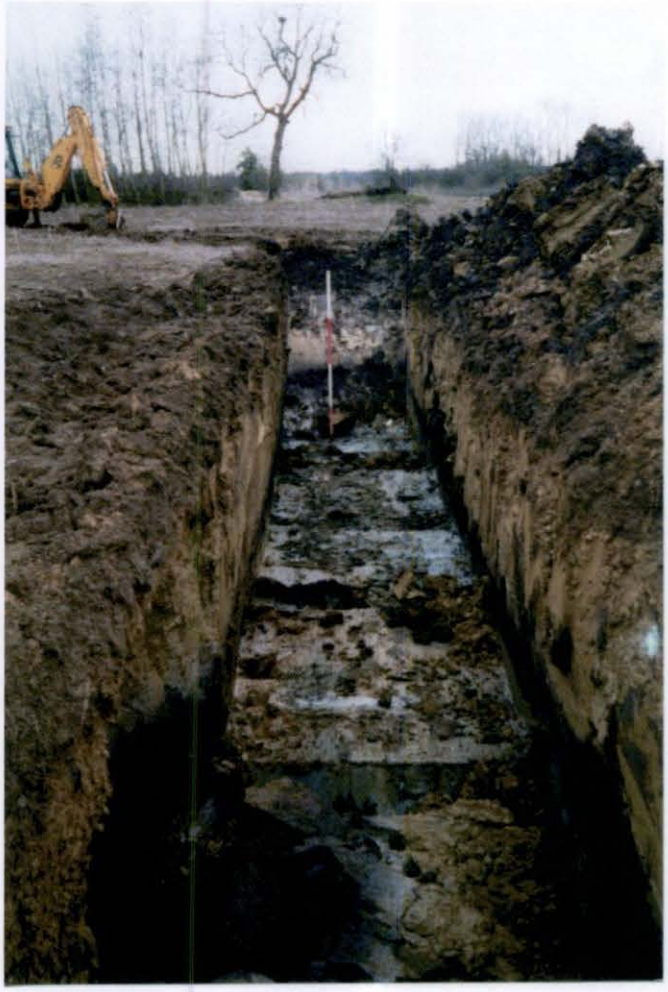

Figure 8. Trench 3 from the NE. The water filled feature at the front is the flooded trial investigation of the lias clay.

Figure 9. Trench 5, sticky alluvial clay over gravel and lias clay.

Figure 10. Trench 4 from the south. The rubble spread 405 is in the foreground and the pitched rubble 403 at rear by the horizontal ranging rods. Wall 404 is just visible between the vertical ranging rods.

Figure 11. Wall 404 from the west. Facing stones at the bottom right have been removed and the further end was damaged by machine excavation. Although the wall was not obviously evident in the further section, the slight depressions visible in this photo suggest stones had been removed from here and the wall probably does continue.

Figure 12. Trench 4 excavated to the gravel over the lias clay. Note the undulating surface also noted in trench 1 (compare fig. 4). The buried soil/archaeological horizon 409 is visible in the section to left. The figure is standing on the unexcavated gully 406.

Figure 13. Gully 406 in trench 4. It has been slightly truncated and the stones in the section above it are actually in its fill. It is sealed by the alluvium 402.

BATH & NORTH
EAST SOMERSET

DESIGN BRIEF FOR ARCHAEOLOGICAL EVALUATION
Built Heritage Group, Bath & North East Somerset Council

Development description: Provision of carpark and new buildings

Company: Avon Valley Country Park

Site name: Avon Valley Country Park

Location: Saltford

NGR: ST 67130 68590

This design brief is only valid for six months after the above date. After this period the Built Heritage Group should be contacted. Any specifications resulting from this brief will only be considered for the same period. Please note that this document is not suitable for tendering against and is written solely to enable archaeological project managers to produce an appropriate archaeological specification; the term project manager is used to denote the archaeological project manager only.

It is expected that the project manager will visit the site and consult the local Sites and Monuments Record before completing their specification. The Built Heritage Group cannot guarantee the inclusion of all relevant information within the design brief.

1.0 Non technical summary

1.1 A planning application dealing with the provision of a carpark and new building at the Avon Valley Country Park has been found to effect an area of archaelogical potential comprising 2nd terrace river gravels and possible Roman occupation in the vicinity. The results of an archaoelogilca assessment of the site has been requested by the local planning authority prior to a determniation of the application.

2.0 Documentation

2.1 There is no documentation associated with this site other than the attatched Sites and Monuments entries.

3.0 Location and site description.

3.1 The site lies to the north of the main Bath to Bristol Road, the A4, betyween Keynsham and Saltford on 2nd terrace river gravels of the Avon Valley. The site forms part of the Avon Valley Country Park, a mixed use farm which includes children's play areas and a rare breeds site.

3.2 During the construction of a mains water pipe in 1980, Roman pottery was observed at ST6715 6860 (BN 5712). The full Sites and Monuments Record entry is attached.

3.3 The presence of Roman pottery at this location on gravel overlooking the River Avon is indicative of settlement within the immediate vicinity

4.0 Development proposal

4.1 The application comprises a stable block, play barn, extensions to existing toilets, picnic shelters and carparking.

5.0 Development impacts

5.1 These are largely associated with the new builidngs which have strip foundations. The provision of services to the new buildings and drainage will also need to be considered as will the treatment of the carpark surface. Foundation levels are not known and will have to be confirmed with the applicants consultant. New ponds and tree planting may also have an impact.

6.0 Circumstances for the project.

6.1 The local planning authority (LPA) have decided, in accordance with the advice contained in PPG16, paragraph 21, that the results of an archaeological evaluation is required to allow the LPA to fully consider the impacts of development on archaeological remains.

6.2 This brief deals with the objectives and requirements of this evaluation programme.

6.3 A detailed project design and specification is invited for this project in accordance with the details contained below. Documentation sent in response to this brief must include the following (unless already communicated as part of a previous project).

- Curricula Vitarum for all key project personnel
- Recording methodology
- Environmental sampling methodology
- Finds processing methodology
- Conservation and storage methodology
- Health and safety policy

6.4 The Project Design and Specification will conform to the guidelines contained in English Heritage's MAP 2 publication (Management of Archaeological Projects, specifically, Appendix 2). This Project Design must demonstrate an appropriate level of understanding of the academic and practical issues associated with this project.

6.5 The Project Design must propose a project timetable that is wholly compatible with the aims and objectives of the project as stated in this brief. The proposed timetable must also consider the need for contingency in the event of unexpectedly complex stratigraphy, surviving structures and adverse weather conditions.

6.6 The Project Design must contain details of all specialists to be dedicated to the project both full time and on contract and explain the mechanisms by which specialist advice and practical work will be integrated. B&NES is particularly concerned to ensure that specialists are fully involved with all aspects of the project and make regular site visits where they are not part of the full time team.

6.7 Responsibility for Project Design approval and any subsequent amendments rests with the B&NES Archaeological Officer.

7.0 Archaeological programme

7.1 The archaeological programme is divided into the following phases:

1. Design and implementation of evaluation.
2. Site monitoring meeting with B&NES archaeologist, Planning Officer, developer's representative.
3. Extension to evaluation programme if necessary
4. Site reinstatement
5. Post-excavation assessment and analysis.
6. Report preparation and circulation
7. Review meeting with B&NES archaeologist, Planning Officer, developer's representative.
8. Archive and storage

8.0 Project details.

8.1 Design and implementation of evaluation

8.1.1 The evaluation should aim to determine, the location, extent, date, character, condition, significance and quality of any surviving archaeological remains liable to be threatened by the proposed development. An adequate representative sample of all areas where archaeological remains are potentially threatened should be studied. This office will be particularly concerned with the amount of truncation to buried deposits, the presence or absence of a palaeosol or 'B' horizon, the preservation of deposits within negative features and site formation processes generally.

8.1.2 The evaluation should also carefully consider any artefactual or economic information in particular, the survival of faunal evidence and provide an assessment of the viability (for further study) of such information. It will be particularly important to provide an indication of the relative importance of such material for any subsequent decision making regarding mitigation strategies.

8.1.3 The project manager must also arrange, through a suitably qualified specialist, the assessment of the environmental **potential** of the site through the examination of suitable deposits. Please note however that this does not mean full analysis. The project manager must also make the their results known to Vanessa Straker of Bristol University Geography Department who coordinates environmental archaeology in the region on behalf of English Heritage.

8.1.4 Care must be taken in the siting of offices and other support structures in order to minimise impact on the environment. Extreme care must also be taken in the structure and maintenance of spoil heaps for the same reasons and to facilitate a high quality reinstatement. This is particularly important in relation to pasture land.

8.1.5 The archaeological project manager must satisfy themselves that all constraints to groundworks have been identified, including the siting of live services, Tree Preservation Orders and public footpaths. **The BHG bears no responsibility for the inclusion or exclusion of such information within this brief**.

8.1.6 Human remains must be left *in situ* , covered and protected when discovered. No further investigation should normally be permitted and the BHG and the local Coroner must be informed immediately. If removal is essential can only take place under appropriate Home Office and environmental health regulations.

8.1.7 All aspects of the evaluation shall be conducted in accordance with the Institute of Field Archaeologist's *Code of Conduct* and the IFA's *Standard and Guidance for Archaeological Field Evaluations*.

8.1.8 **Before commencing work the project manager must carry out a risk assessment and liaise with the site owner, client and the BHG in ensuring that all potential risks are minimised. A copy of this must be given to the BHG before the commencement of works.**

8.2 Site monitoring meeting

8.2.1 A pre-arranged monitoring meeting will be held at an appropriate moment during the evaluation, normally when archaeological deposits are sufficiently exposed and understood. This meeting will be held on-site and in the company of the B&NES Archaeological Officer and the Planning Case Officer. The developer or their representative may also wish to be present.

8.2.2 The purpose of the monitoring meeting is to ensure that the archaeological work is being undertaken to the appropriate standards and in accordance with the approved specification. It is also to allow the above parties to examine the evidence at first hand and to be alerted to significant discoveries at the earliest opportunity. The meeting will also discuss and agree the scope of any further work, if necessary.

8.3 Further works

8.3.1 In the context of 8.1.1 above it may prove necessary to extend the scope of the evaluation. This will be determined during the monitoring meeting..

8.4 Site reinstatement

8.4.1 Site reinstatement shall be in accordance with health and safety procedures and the site owner's specification.

8.5 Post Excavation Assessment and analysis

8.5.1 The results of the evaluation must be assessed by relevant qualified specialists and the detailed analysis of significant artefact and ecofact assemblages should be implemented if the results are likely to contribute significantly to 8.1.1 and 9.2.

8.6 Report preparation and circulation

8.6.1 The evaluation report must written in accordance with the attached document BHG1999/1.

8.6.2 The full report should be made available to the Built Heritage Group and the County Sites and Monuments Record as soon as is practicable after the completion of post-excavation work. This archive must include the full written report, full set of photographs and negatives, catalogues and indexes, original drawings and digital data (see below).

8.6.3 All drawn, written and database material must be presented in digital format on one or more Computer CD disks. Drawings can be either scanned or digitised. Databases must be either, Microsoft Access, FoxPro or Dbase format: databases not compatible with these will not be acceptable. Written material should be in Microsoft Word compatible format. Photo CD's containing black & white and colour photographs must also be provided

8.6.4 Five copies of the written report must be presented to the Built Heritage Group.

8.7 Review meeting

8.7.1 On receipt of the report and after suitable time for examination, the project manager may be required to attend a review meeting with the B&NES Archaeological Officer and the Planning Case Officer in order to clarify the reports conclusions and recommendations, if any.

8.8 Archive and storage

8.8.1 The project archive shall follow the guidelines contained in, "*Guidelines for the Preparation of Excavation Archives for long-term storage*" (United Kingdom Institute for Conservation 1990) and, "*Standards in the Museum care of archaeological collections*" (Museums and Galleries Commission 1992), *Management of Archaeological Projects 2* (English Heritage 1991), and be deposited within the Roman Baths Museum.

8.8.2 The Archive should also conform to any specific requirements of the B&NES Museum Service and the Keeper of Collections should be contacted in this regard.

8.8.3 Arrangements for the long term storage and deposition of all artefacts must be agreed with the landowner and the Built Heritage Group before the commencement of fieldwork.

9.0 Aims and Objectives

9.1 The primary objective is to determine, the location, extent, date, character, condition, significance and quality of any surviving archaeological remains liable to be threatened by the proposed development. However, the following issues should also be considered:

9.2 Site Specific aims

9.2.1 There are no specific aims.

10.0 General Requirements

10.1 Staffing

10.1.1 The project team will comprise professional archaeologists with a minimum of two years continuous experience of urban archaeology.

10.1.2 The Project Manager will normally be a Member of the Institute of Field Archaeologists or equivalent EU professional body and will be dedicated to this project full time. She/he will have an appropriate level of experience and seniority suitable to a project of this size and importance. She/he will be managing the project through to publication.

10.2 Excavation methodology

10.2.1 Excavation of archaeological fills and deposits will be by hand.

10.2.2 Casual "mattock testing" of archaeological features should only be undertaken in exceptional circumstances.

10.2.3 Homogenous horizontal deposits, particularly medieval "garden soil" must be removed in spits, sample sieved (to act as a control) and recorded in spits to allow for a vertical separation of artefacts and ecofacts.

10.2.4 Pits and other non structural intrusions should be excavated in a manner that allows for their stratigraphic recording.

10.2.5 Post holes, post pits and other structurally related intrusions should be excavated in a manner that allows for the identification of post pipes, post packing and any related material and the angles at which posts/stakes were positioned.

10.2.6 Wells and any other deep intrusions must be excavated to a safe depth only and in any case only down to the maximum depth of the proposed basement excavation. Any remaining deposits will be secured through the use of aggregate and geotextile membrane.

10.2.7 Substantial structures of Roman origin will not be excavated in the first instance and may, depending on a review of circumstances, be conserved within the development. On discovery, the B&NES Archaeological Officer must be informed immediately.

10.3 Sampling methodology

10.3.1 All industrial features including "domestic" ovens and hearths will be sampled for analysis.

10.3.2 A programme of regular sampling of all archaeological fills and deposits will be implemented. These samples should be regularly (day-to-day) processed on or off-site to allow a speedy exchange of information between specialist and excavator. Sampling for micro-faunal remains is a priority.

10.3.3 English Heritage's regional environmental archaeology coordinator, Vanessa Straker of Bristol University Geography Department should be contacted prior to the completion of the environmental sampling methodology. The results of environmental analysis must be communicated to Vanessa Straker at the earliest opportunity.

10.3.4 All artefacts, including unstratified material, will be retained, processed and recorded on a regular (day-to-day) basis to allow a speedy exchange of information between specialist and excavator.

10.4 Recording methodology

10.4.1 The recording system will closely follow the format established by the Museum of London Archaeological Recording Manual (1990).

10.4.2 A relational database in common usage must be used for recording purposes. This database must be compatible with Microsoft Access, FoxPro or Dbase, to allow for the integration of data with the Sites and Monuments Record which includes the Bath City UAD.

10.4.3 All plans should be digitised and 3D recording of artefact groups and single significant finds and environmental samples must be implemented.

10.4.4 The basic site record shall be black and white photographs and must be processed on a regular basis throughout the life of the project to allow for quality control.

10.4.5 Colour slides and colour prints must also be maintained as part of the record. A colour slide record for lecture purposes detailing the progress of the excavation must be maintained.

10.4.6 A large format camera must be used to maintain a black and white record of project milestones and significant discoveries for publication purposes.

11.2 Monitoring

11.2.1 The B&NES Council Archaeological Officer will be responsible for monitoring both fieldwork and post-fieldwork aspects of the project. Regular monitoring points coinciding with convenient milestones will be agreed. More informal monitoring on a regular basis will also occur throughout the life of the project.

Bob Sydes
Archaeological Officer

Strategic Policy
Trimbridge House
Trim Street
Bath
BA1 2DP

Bath & North East Somerset Council: Historic Buildings, Sites and Monum *(Full Report)*

22/10/2001

SMR Number	Site Name	Record Type
BN5712 - BN5712	Roman Pottery NW of Stidham Farm	Find Spot

Classification and Scoring

Type and Date		Materials/Evidence
FINDSPOT	Roman - 43 AD to 409 AD	FIND

Class

Rating and Scoring

Location

National Grid Reference

ST671686

Administrative Area

Civil Parish Keynsham, Bath & North East Somerset,

Address

Historic Names

Status and other references

Sites & Monuments Record - BN5712

Description

About 10 sherds of Roman pottery found in an east-west pipeline in 1980. {1} Presumably an archaeological observation of the actual pipeline during monitoring, but the B&NES SMR has no record. {2}

Sources

(1) Verbal communication: , , Iles R, 1980,

(2) SMR enhancement: , , Bob Sydes, 30/10/98,

Associated Finds

Associated Events/Activities

Associated Individuals

Associated Organisations

BATH & NORTH
EAST SOMERSET

Avon Valley Country Park, Pixash Lane, Keynsham. Specification for a programme of archaeological work

by

BATH ARCHÆOLOGICAL TRUST LTD.

Mark Beaton January 2003

A PROPOSAL FOR A PROGRAMME OF ARCHAEOLOGICAL INVESTIGATION TO MEET THE REQUIREMENTS OF A DESIGN BRIEF FOR ARCHAEOLOGICAL EVALUATION SUPPLIED BY BATH AND NORTH EAST SOMERSET COUNCIL BUILT HERITAGE GROUP, BATH.

1. Background

i. The Local Planning Authority (LPA) have decided, in accordance with the advice contained in PPG 16 paragraph 21, that the results of an archaeological evaluation are required to allow the LPA to fully consider the impacts of development on any archaeological remains.

2. Archaeological remains

i. SMR entry BN5712 located in the centre of the site, refers to the discovery of Roman pottery during the excavation of a pipe trench in 1980.

ii. The western edge of the development site lies 1.25 km east-south-east of the substantial Roman villa located on the Keynsham Hams.

iii. The eastern edge of the development site must lie close to the likely route of the Roman road linking Bitton with Charterhouse on Mendip.

iv. The site lies above the 2nd terrace river gravels and therefore has potential for early prehistoric material. The relatively insubstantial nature of the proposed structures on the site, mean that these deposits which lie below later alluvial deposits are likely to remain undisturbed however.

3. Archaeological Investigations

3.1 Outline Programme

i. It is intended to excavate 5 trenches each of which will be two metres wide. The size and location of the trenches is indicated on figure 1. To summarize however there will be three trenches measuring 10x2 metres and two trenches measuring 20x2 metres.

ii. Any deposits encountered will be assessed for their academic potential, and the degree to which they would be affected by the new development. A decision on whether or not a second phase of work or modifications to the design proposal are required would be made in conjunction with the B&NES Archaeological Officer.

3.2 Project design

3.2.1 Aims

i. To determine, the location, extent, date, character, condition, significance and quality of any surviving archaeological remains.

ii. To clarify the extent to which any deposits will be affected by the new development

iii. To provide data to inform a mitigation strategy should one be necessary in the event of significant deposits being encountered.

3.2.2 Strategy

i. A mechanical excavator will be used under archaeological supervision to remove the topsoil in spits across all five trenches.

ii. The need for any further mechanical excavation will be determined by the nature of any material encountered below the topsoil. A subsoil without any negative features or structures would be removed mechanically in spits and soil samples regularly taken for analysis.

iii. The rest of the excavation will be by hand.

iv. The excavation will be directed by Mark Beaton, and will be staffed by additional Trust employees as necessary. Pottery of all periods will be assessed by Lisa Brown, small finds will be assessed by John Clarke of Bath Archaeological Trust, molluscan studies will be carried out by Paul Davies of Bath Spa University College, plant macrofossils will be studied by Julie Jones, pollen by Heather Tinsley and faunal remains by Lorrain Higbee.

3.3 Preparations

i. Upon confirmation of the acceptance of this specification *BAT* will inform the *CAO* of the intended start date and duration of site works.

ii. The appropriate local museum will be informed of the start date and duration of the site works, and the museum's acceptance in principle of the project archive will be sought.

iii. An appropriate conservator will be informed of the intended start date and duration of the works and of the range of materials likely to be recovered.

3.4 Archaeological Evaluation

i. The locations of all investigations would be assigned a unique numerical reference and plotted on a 1:100 scale base map.

ii. The ground level at each location would be calculated relative to OS datum.

iii. All deposits revealed, irrespective of their apparent archaeological significance, would be recorded using elements of the *BAT* recording system of complementary written, drawn and photographic records. The minimum record for each investigation would be: location recorded on site outline plan; a scale section drawing related to OS datum; written *context sheets* describing the stratigraphic, physical and artefactual characteristics of all deposits; and black and white prints and colour slide photographs in 35mm format of the most representative section(s).

iv. The stratigraphic, physical and artefactual characteristics of all individual deposits would be recorded in detail on written *Context records* complemented by plans at 1:50 or 1:20 displaying at least one (1) OS related level for those contexts with a horizontal boundary, and black and white photographs.

v. All intrinsically datable artefacts recovered from each deposit would be retained. All modern materials should be considered intrinsically datable for the purposes of assessing deposit integrity. Typologically significant objects, or objects likely to require individual analysis or conservation, would be assigned unique numerical references, their physical and stratigraphic characteristics would be recorded individually on *Object records* complemented by scale drawings and photographs as necessary, and they would be packaged individually in accordance with current UKIC guidelines.

vi. Bulk samples (nominally 10 litres) would be retained from datable and stratigraphically undisturbed deposits that appeared on visual inspection to contain abundant palaeoenvironmental materials. In addition bulk samples (nominally 5 litres) will be taken at regular intervals during the excavation of any apparently homogeneous horizontal deposits. Materials contained within the samples would be extracted by wet sieving or flotation separation, air dried, fraction sorted to 1mm, curated in stable conditions and the principle material categories catalogued.

vii. No investigations should be backfilled until archaeologically recorded, as determined by the Project Manager.

3.5 Presentation and Review of Results

i. All retained materials would be processed, catalogued and curated temporarily, in accordance with current UKIC guidelines, prior to despatch to analytical specialists. The minimum record for the artefact assemblage of each context would be a written *Context Finds Record* . All records generated during site work would be checked and compiled into a fully indexed and cross-referenced stable archive in accordance with Appendix 6 of MAP2 (English Heritage 1991).

ii. Recovered materials would be despatched to specialists (listed at 3.2.2.iv) for assessment. Assessment would be limited to identifying the date, broad assemblage range, condition and significance of the materials. Detailed analysis, such as of pottery fabrics, plant or animal species, would only be undertaken when a final decision on the scope of the work is taken. Assessments would be presented in text form supported by tables of the basic data. Items requiring conservation would be despatched to the nominated conservator after assessment.

iii. The recorded deposits revealed during archaeological evaluation would be catalogued by trench, and a summary prepared of the principle deposits grouped by site specific criteria. The summary would be in text format supported by tables and illustrations if warranted, and would concentrate on presenting an accurate but succinct description of the range of deposits revealed.

iv. The results of the above would be presented in an evaluation report, concluding with a resource model identifying the extent, nature and integrity of surviving archaeological deposits within the development site. The report would make specific reference to the value of the archaeological deposits. The report would also present the background and

setting of the work, together with the basic data in sufficient level of detail to allow re-assessment of the results without recourse to archive materials.