Castle View School, Sunderland.

Report on Archaeological Mitigation Works

May 2010
SLR Ref: 410-1625-00017

solutions for today's environment

CONTENTS

TABLES

FIGURES

APPENDICES

Non Technical Summary

An archaeological evaluation and mitigation works have been undertaken by SLR Consulting on behalf of Balfour Beatty at Castle View School, Sunderland (NGR 435489 558331).

The work was executed intermittently during 2008 and 2009 around construction activities to facilitate the discharge of a planning condition on consent for a programme to rebuild the school.

The archaeological mitigation works identified significant archaeological remains in the form of a segmented ditch (or pit alignment) and a ditch dated by OSL to the 1st Millennium BC. The archaeological remains are described and considered here.

1.0 INTRODUCTION

This document has been prepared by SLR Consulting on behalf of Balfour Beatty. It describes the results of archaeological mitigation fieldwork undertaken at Castle View School, Sunderland at National Grid Reference (NGR) 435489 558331 during the periods 28th of July to 19th of September 2008, 27th of February to 21st of March 2009, and 11th September 2009 to 21st October 2009.

The mitigation works have been executed in response to planning condition 12 on consent to upgrade the facilities at Castle View School (Planning Reference 07/05268/LAP). The redevelopment work is part of the Building Schools for the Future (BSF) programme.

The mitigation fieldwork is part of an archaeological programme which had previously included an evaluation undertaken in March 2008 (Towle 2008a).

The excavation exposed and recorded significant archaeological features: prehistoric ditches dated to the 1st Millennia BC. One of these linear boundaries was partially constructed from discrete segments; this type of landscape feature is also referred to elsewhere as a “pit alignment” or a “causeway ditch”.

The archaeological remains are described and considered with reference to their regional context.

The archaeological work has been monitored by the Tyne and Wear Archaeology Officer (Jennifer Morrison) on behalf of the local planning authority.

2.0 ACKNOWLEDGEMENTS

SLR would like to thank Robert Bradley, Jonathon Ponton and Stuart Berwick of Balfour Beatty, Jennifer Morrison, Tyne and Wear Archaeology Officer, Steve Speak of Tyne and Wear Museums, Jacqui Huntley, Regional Archaeological Science Advisor for English Heritage, Jean-Luc Schwenninger of Oxford University Research Laboratory for Archaeology and the History of Art, John Carrott and Deborah Jacques of Palaeoenvironmental Research Services, Caroline McHale, Anthony Townson, David Litchfield and students of Castle View School, staff from Sillars, Gerry Martin, John Onraet, Richard Wooley and Seth Kunin of Gerry Martin and Associates for their assistance in the execution of the archaeological fieldwork and in the preparation of this document.

The SLR staff involved in the fieldwork and preparation of this document include:

Andy Towle	Associate	Project Management, fieldwork & text
Laurence Hayes	Associate	Fieldwork and Quality Assurance
Damian Hind	Associate	Fieldwork and Research
Johann Chauveau	Senior CAD Technician	Drawing preparation
Caroline Malim	Senior CAD Technician	Drawing preparation
Adrian Clarke	Landscape Architect	Background Information

3.0 AIMS AND OBJECTIVES

The purpose of the archaeological work was to mitigate the impact of the development on archaeological remains at the site identified during the evaluation. The Tyne and Wear Archaeology officer requested that Balfour Beatty arrange for the archaeological remains in the area of Evaluation Trench 3 to be exposed and excavated ahead of the groundworks associated with the development. Thereafter a watching brief was maintained on the preparatory groundworks in the adjacent areas as the existing school was demolished and new structures erected in a staged process.

3.1 Aims

- To undertake an archaeological site investigation on behalf of Balfour Beatty to mitigate the impact of the development by preservation by record.

3.2 Objectives

- To excavate and record a large trench to the east of the main school building
- To maintain a watching brief on adjacent groundworks
- To recover all artefacts and, where necessary, palaeoenvironmental samples from deposits of potential significance
- Analyse the site records, artefacts and ecofacts to produce a report on the archaeology of the site
- To provide archaeological activities for children at the school in conjunction with teaching staff

4.0 SITE DESCRIPTION AND GEOLOGY

Castle View School is located towards the north western limit of Sunderland, 700m north of the A1231, and 600m east of the A19 roads (Figure 1). The site comprises a sub-rectangular parcel of land centred on National Grid Reference (NGR) 435489 558331 (Figure 2). It comprises a collection of post-war school buildings fronting onto Cartwright Road to the east, with extensive school playing fields to the west.

The site is bounded along its northern side by a steel palisade fence adjacent to the tree-lined watercourse Hylton Dene Burn. The western limit of the site is also defined by such a fence, beyond which is located open woodland landscaped for recreational use. The southern boundary of the site is indicated by a steel palisade fence, separating the playing fields from a post-war housing estate. The south eastern corner of the development area is adjacent to St Margaret's Church.

The site is generally flat, although the northern parts of the playing fields slope down towards the Hylton Dene Burn. The site surface is at approximately 30m AOD.

The underlying solid geology of the site consists of Upper Coal Measures, made up of bands of sandstones and "argillaceous" deposits (Mott MacDonald Geotechnical and Geoenvironmental Report December 2006: 5). These are overlain by drift deposits of stiff boulder clay ("Durham Lower Boulder Clay"). Geotechnical investigations have established that "made ground" above the drift geology is 0.4 - 1.1m deep.

Figure 1: Site Location

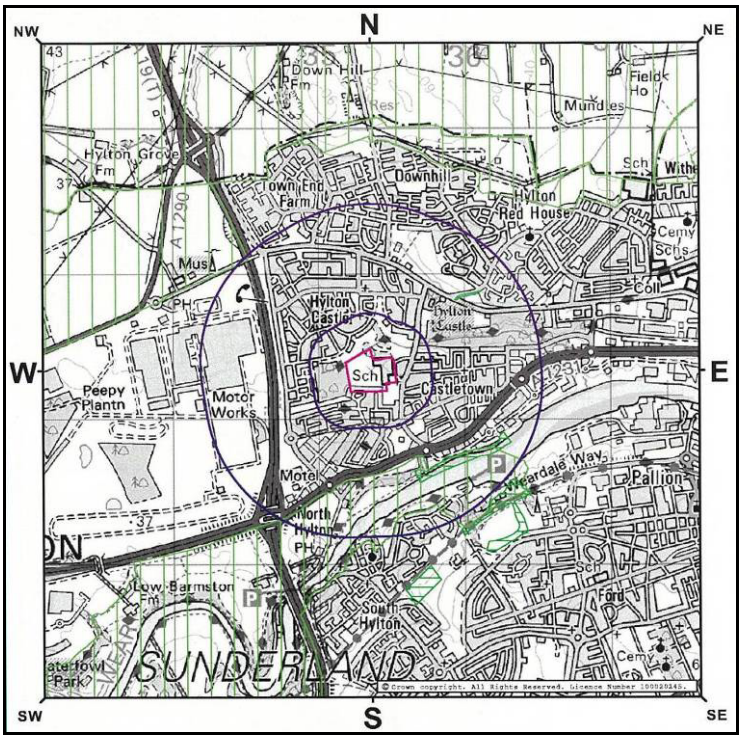

Figure 2: Detail of application site, pre-works layout, showing location of initial evaluation trenches and area of detailed archaeological mitigation works

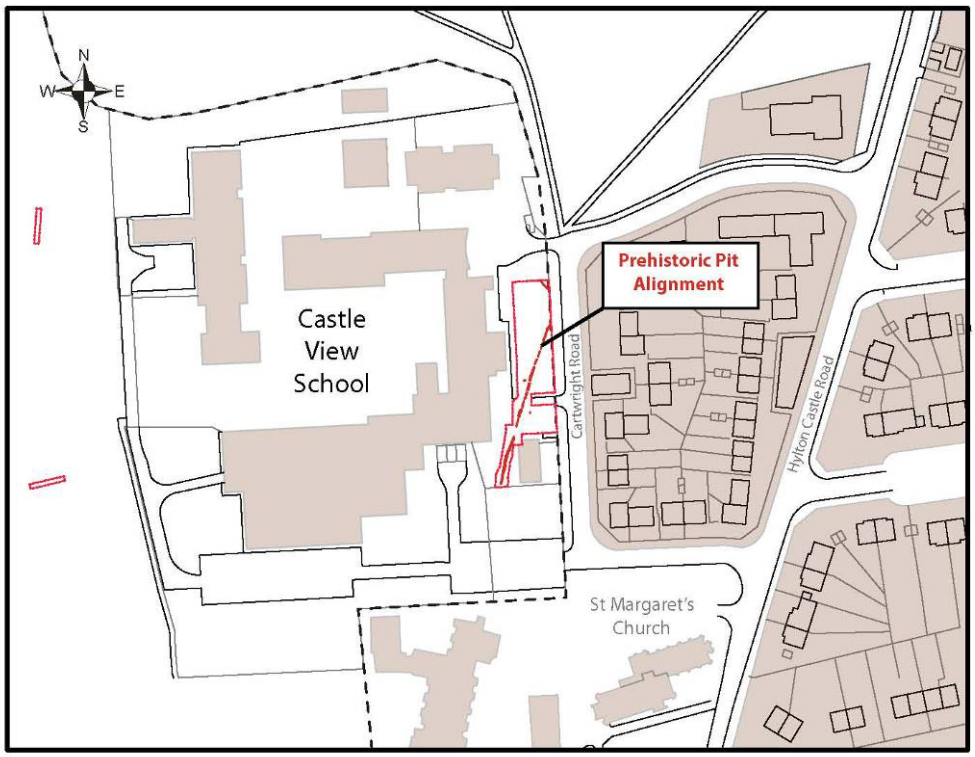

5.0 ARCHAEOLOGICAL BACKGROUND

There were no known archaeological remains located within the site boundary prior to the evaluation.

5.1 Prehistoric Archaeology: Mesolithic (c 12000 – 4000 BC)

Prehistoric worked flints, attributed to the Mesolithic period have been recovered from the southern slopes of Hylton Castle Hill (approximately 800m north east of the development area at NGR NZ 360 590). This group of finds includes a hollow scraper, food chopper, pyramidal core and two flakes all of which were recovered in 1931 (HER number 384; McKelvey 2003: 4).

A further scatter of Mesolithic flint artefacts has been recorded in the North Hylton area at approximately NGR NZ 345 565, consisting of a side scraper, two retouched flakes and five waste flakes (HER number 343).

5.2 Prehistoric Archaeology: Neolithic (c 4000 – c 1800 BC)

A fragment of a prehistoric greenstone axe hammer has been recorded as originating north of Hylton Castle (HER number 381, NGR NZ 35 58). This may be the same as a similar HER entry (number 383, NGR NZ 360 590) which records a broken greenstone axe from Hylton Castle Hill, although the recorded dimensions differ.

A gritstone adze was excavated from the top of Hylton Castle Hill during the First World War indicating prehistoric activity across this area (HER number 382; McKelvey 2003: 4).

These hafted tools are from locations some distance from Castle View School, and can be taken as indicative of activity in the general area during this period.

5.3 Prehistoric Archaeology: Bronze Age (c 1800 – 600 BC)

A Bronze Age socketed axe head was recovered from the River Wear close to Hylton, at approximately NGR NZ 35 57 (HER number 375; McKelvey 2003: 4).

Two late Bronze Age swords were dredged from the Wear at Ford, Hylton in 1830 and 1910 (NGR NZ 350 569, HER number 346).

High value/High status items such as these are often associated with watery locations during both the Bronze Age and Iron Age, and are usually interpreted as votive offerings.

5.4 Prehistoric Archaeology: Iron Age (c 600 – AD43)

A Late Bronze Age/Early Iron Age log boat was found in the Wear near Hylton in 1880 at approximately NGR NZ 35 57 (HER number 346). There are no other known archaeological remains from this period in the vicinity of Castle View School.

5.4.1 Regional Iron Age Context:

There is evidence for cereal crops from palaeoenvironmental analyses of samples from numerous sites dating to the 1st Millennium BC, demonstrating widespread woodland clearance (Petts and Gerrard 2006: 35). There is only weak evidence for settlement hierarchy in the lowland north east during the 1st Millennium BC, suggesting that settlement was organised around household groups rather than larger social formations (ibid: 36). A Late Bronze Age enclosure has been identified at the Vaux Brewery site in Sunderland, but there are no indications of later, large fortified settlements such as the Iron Age hill forts

known from the Cheviots. There is a general tendency for open settlements to be replaced by enclosed settlements surrounded by ditches and associated with wider field systems, although the absolute chronology of this development is unclear (ibid: 38). The almost total absence of funerary data for the Iron Age in the region is thought to reflect the adoption of archaeologically invisible practices (such as excarnation), rather than simply a function of preservation (ibid: 39).

The regional archaeological research framework identifies the need for the application of absolute dating techniques to sites, in the face of an uncertain chronological framework for the 1st Millennium BC. The relative paucity of artefacts demands a better understanding of the dating of the respective contexts for the material being recovered. Improved dating of sites will also inform an understanding of the shifting settlement patterns across the 1st Millennium BC, in particular the desertion of upland sites during the Bronze Age and commensurate intensification of settlement on lowland sites (Petts and Gerrard 135-137). Settlement morphology is too poorly understood to offer a clear chronological framework. Optically Stimulated Luminescence (OSL) dating of archaeological sediments is specifically identified as a key technique to be used at sites considered to be from this period.

5.5 Romano-British Archaeology (AD 43 – AD 410)

There are no known Romano-British archaeological remains in the vicinity of Castle View School. Five Roman coins are claimed to have been recovered from Hylton Dene (HER number 4606, NGR NZ 35 58). The provenance of these coins is questionable, and they cannot therefore be considered as indicative of activity adjacent to the site during this period.

5.6 Early Medieval Archaeology (AD 410 – 1066)

A bronze Anglo-Saxon brooch has been recovered from Hylton at NGR NZ 343 567 (HER number 347). This stray find is difficult to interpret in isolation, and does not necessarily indicate the presence of a site such as a settlement or cemetery, but simply activity in the general area during this period. There is nothing to connect the find to the development site.

5.7 Medieval Archaeology (1066 – 1500)

The earliest reference to Hylton (or Hilton) is of Henry Hilton establishing the castle in 1072 ("Castle in the Community: a brief history and guide to Hylton Castle" prepared by Bill Higham and Friends of Hylton Dene 2007: 7) (HER number 12; McKelvey 2003: 6-7; NGR NZ 3578 5879). Nothing survives above ground of this earliest castle, and its exact location is uncertain (although it is assumed to be at the site of the present castle). The present roofless remains at the site are largely part of the gatehouse tower, built between 1395 and 1430. This structure is located approximately 350m north east of Castle View School. Archaeological work (trial trenching and geophysical survey) to the east of the gatehouse has established the presence of substantial contemporary buildings arranged on the same axis. An extensive 15th Century castle organised around an open courtyard has been postulated on the basis of the available evidence (McKelvey 2003: 6). The castle was reduced to the existing gatehouse, with additional wings during the 18th Century. Further modifications to the gatehouse took place in 1869, and by 1950 it had fallen into a state of disrepair when it was taken into the care of the Department of Works (subsequently DOE and then English Heritage). The Castle is a Scheduled Monument (No 32074) and Grade I Listed Building.

Hylton Chapel, dedicated to St Catherine, at NGR NZ 3584 5882, adjacent to Hylton Castle, is thought to have been established during the 12th Century. The earliest documentary reference is the granting of permission for Romanus of Hylton to appoint a chaplain for his chapel at the site in 1157 (McKelvey 2003: 7). The Hylton family was subsequently allowed

to bury its family members there, leading to the establishment of chantries with the presence of three chantry priests in place by 1370. The last recorded chaplain was in 1536, after which the building has been noted in various states of disrepair. The surviving ruinous fabric largely consists of 15th and 16th Century rebuilds of the chancel (HER number 13).

Hylton Village is known from documentary references only, the earliest identified to date being from 1323 when Robert Hilton referred to the "freemen and cotmen" of Hilton in a grant. The location of the village is yet to be established archaeologically, but is thought to be at approximately NGR NZ 355 591, north of Castle View School, north west of Hylton Castle, on the basis of cartographic evidence (HER number 14).

Similarly, Hylton (water) mill is only known from documentary sources, with a late 12th Century reference to Alexander de Hilton making a grant from the mill at Hylton (McKelvey 2003: 5). The most likely location for such a structure would be adjacent to Hylton Dene, north and east of Castle View School. A later windmill is known from a map of 1768, located to the north of Hylton Castle (HER number 15; McKelvey 2003: 5).

Whilst there is extensive evidence for medieval settlement in the vicinity of the development area, it is focussed to the north and east of the site under consideration here. This means that the area of the school is likely to have been located within open farmland during the medieval period, with archaeological remains likely to consist of field boundaries (i.e. ditches) and trackways rather than buildings.

5.8 Post- Medieval Archaeology (1500 – 1800)

During the English Civil War (1642 -6), there was a nearby inconclusive skirmish between Royalist forces based at Hylton and the (Parliamentarian) Scots army encamped at Monkwearmouth. The skirmish, also known as the Battle of Bolden Hills, took place in March 1644 and ranged over the high ground between Hylton, Bolden and Southwick. There are no known earthworks or archaeological remains associated with the encounter, and no reason to assume that there might be related material within or close to the site of Castle View School.

5.9 19th and 20th Century Archaeology (1800 – 2000)

There are no known archaeological remains from the 19th Century within the site boundary. A review of the historic Ordnance Survey Maps from 1856 to the present day does not identify any structures indicative of archaeological remains at the site. In 1856 the site was located over three large post-enclosure fields containing a number of mature trees within the field boundaries (suggesting relative antiquity). Whilst clay quarrying and brick manufacture was taking place to the west of the site during this period, there are no indications of similar industrial activities within the development area. St Margaret's Church was established south west of the area of interest by 1896, with an associated cemetery further south between 1919 and 1939. There is no reason to believe there are burials within the development area linked to St Margaret's. At the end of the 19th Century, the development site and its immediate vicinity were essentially rural in nature, with industry gradually creeping into the area from the bank of the Wear to the south and housing being established in Castletown to the east.

5.10 Previous Investigations

An archaeological evaluation was undertaken at the site in March 2008. Three trenches were excavated (Figure 2). Trenches 1 and 2 contained no significant archaeological remains. Trench 3, located to the east of the main school buildings contained undated,

probably prehistoric features. This triggered the requirement for mitigation fieldwork in that area ahead of any groundworks (Towle 2008a).

6.0 METHODOLOGY

The excavation and recording were undertaken in the manner specified in the Project Design (Towle 2008a) and the Supplementary Method Statement (Towle 2008b). The works were undertaken during four separate periods as portions of the site became available for archaeological investigation during the development programme. The area examined was that adjacent to Trench 3 of the evaluation, located to the front of the existing school on its eastern side, adjacent to Cartwright Road. The initial area was approximately 50m x 15m. This was then extended southwards beneath the location of the school caretaker's bungalow following its demolition in early September 2008. The second area was an additional 16m x 5m. The total area investigated will form a car park to the new school. Subsequently the groundworks on adjacent areas were monitored as they were exposed during demolition and clearance activities.

The modern surfaces (road, turf and building foundations) were removed using a mechanical excavator equipped with a toothless ditching bucket, under archaeological supervision. The archaeologically significant deposits were identified against a buried soil in some parts of the site, and against the upper surface of the drift geology elsewhere (indicating widespread modern truncation). The individual archaeological features were all investigated by hand, and selectively sampled for palaeoenvironmental analysis and OSL (Optically Stimulated Luminescence) dating. Preliminary review of the palaeoenvironmental samples for carbon-rich material suggested that they were not suitable for carbon-14 dating, and the allocated resources for this were deployed for OSL dating. There was occasional sieving of fills through a 5mm mesh to ensure that artefacts were not being missed during the excavation: no additional finds were identified from the sieving, so a wider programme was not adopted.

Figure 3 : View to North, cleaning by hand after topsoil strip using machine excavator

Whilst reviewing the methodology during the post-excavation analysis it was noted that the remnant buried soil was poorly recorded: during the machine-strip, this was removed with the topsoil in those areas where there were no cut features showing in its upper surface. This permitted the field staff to ensure that the buried soil did not obscure more significant archaeological remains beneath, but meant that its extent was not recorded. Nor was it sampled for palaeoenvironmental analysis, as sampling was targeted at fills of the linear features. In retrospect, it would have been useful to sample this deposit for comparison with the fills, and better record its extent. Future work in the vicinity should take care to note the potential of this deposit.

The linear features were hand-excavated and sampled as described in the method statement, with each segment terminus excavated to check for votive offerings. However, on reflection, it would have been worthwhile excavating a longitudinal section along the longest segments, to investigate the possibility of stratigraphic evidence for a two-phase construction.

The evaluation was undertaken during term time, and included educational activities for pupils from the school, arranged with the help of staff (Towle 2008a). It was hoped to continue the involvement of the students in the mitigation works, however the second phase of controlled excavation took place during the summer holiday period, and it was not possible to create a additional opportunities for educational activities. The watching brief work, undertaken amidst demolition and clearance work was not suitable for involving students.

The OSL dating proved an effective technique for dating the prehistoric features, and the palaeoenvironmental analysis added useful information into the interpretation, clearly justifying the selection of these techniques.

SLR is a Registered Archaeological Organisation (RAO) with the Institute for Archaeologists (IfA). SLR undertakes work to the highest professional standards. This report has been produced with reference to the IfA's *Standard and Guidance for Archaeological Excavation* (2008).

SLR operates a quality management system to ISO 9001 which helps to ensure all projects are managed in a professional and transparent manner.

7.0 RESULTS

The evaluation, excavation and watching brief results are considered together here. The stratigraphic sequence is described, supplemented with information from the specialist reports which are also reproduced in full as appendices. A total of 83 contexts were recorded, 40 site drawings made, 23 samples recovered for palaeoenvironmental and OSL dating analysis and 141 photographs taken. Three phases were identified: Natural, Prehistoric and Modern.

A single phase of significant archaeological activity was defined, consisting of two linear cut features. The only archaeological artefacts recovered were burnt stones, interpreted as "pot boilers" found in the fills of one of the linear features.

Figure 4 : Hand excavation of terminus of ditch segment

7.1 Natural

The underlying drift geology (context numbers 13 and 16) consisted of mottled yellowish-brown boulder clay containing approximately 10% silt. The boulder clay contained frequent inclusions of naturally occurring coal, as well as fragments of sandstone and pockets of coarse sand. It is assumed that these localised variations in the clay's nature are a consequence of the original deposition out of water and the subsequent glacial action. During the evaluation, a potential post-pit was identified (contexts 1, 2, 3 and 5). This feature consisted of a circular "cut" 1m in diameter, 0.45m deep with a fill of greyish clay and a discrete "post pipe" of coarse sand. When the wider area under investigation was stripped of topsoil, a number of similar features, of varying form and dimensions were exposed (contexts 40 and 41; 34, 35 and 36). Several of these were tested by hand excavation, and all proved to be natural in origin, from periglacial action. The post-pit from the evaluation is therefore reinterpreted as localised variation in the naturally deposited boulder clay.

Figure 5: North Facing Section through peri-glacial feature in the upper surface of the drift geology. 1m scale.

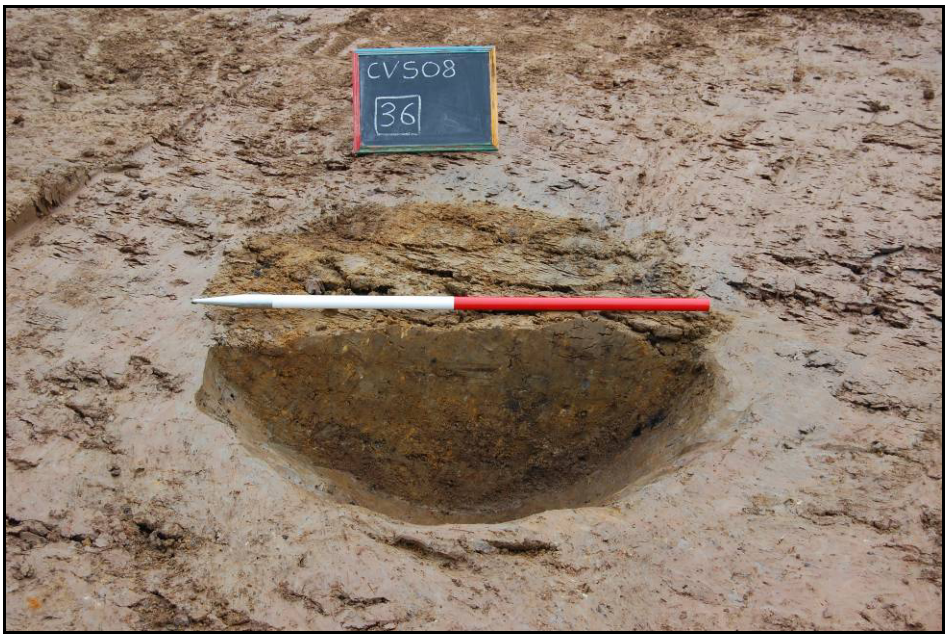

The upper surface of the boulder clay was located at 30.03m AOD at the northern limit of the excavation, rising to 30.27m AOD and falling to 29.81m AOD at the southern limit of the excavation.

7.2 Buried Soil Horizon

A deposit of mid greyish brown silty clay was identified, located at the north-eastern limit of the trench. This was identified as remnant subsoil beneath the modern topsoil and above the natural boulder clay. The linear feature 25 (dated to 1271 BC +/- 310 by OSL dating) was observed cutting through this deposit giving a *terminus ante quem* for its formation (although see below for further discussion of this dating evidence). The buried soil was investigated by hand, no finds were identified, and it was removed by machine to ensure that it did not obscure any cut features. No archaeological remains were masked by this deposit. This soil horizon was limited in its distribution to the north-east corner of the area of investigation. It is thought to have been truncated elsewhere on site by ploughing and/or groundworks associated with the construction of the first school on the site. It was not sampled for palaeoenvironmental analysis, and on reflection this was an oversight: further investigations in the area should ideally examine this deposit where it survives, as a potential cultivation soil with evidence for the agricultural regime pre-dating or broadly contemporary to the linear feature 25.

Figure 6: Stratigraphic matrix for the site

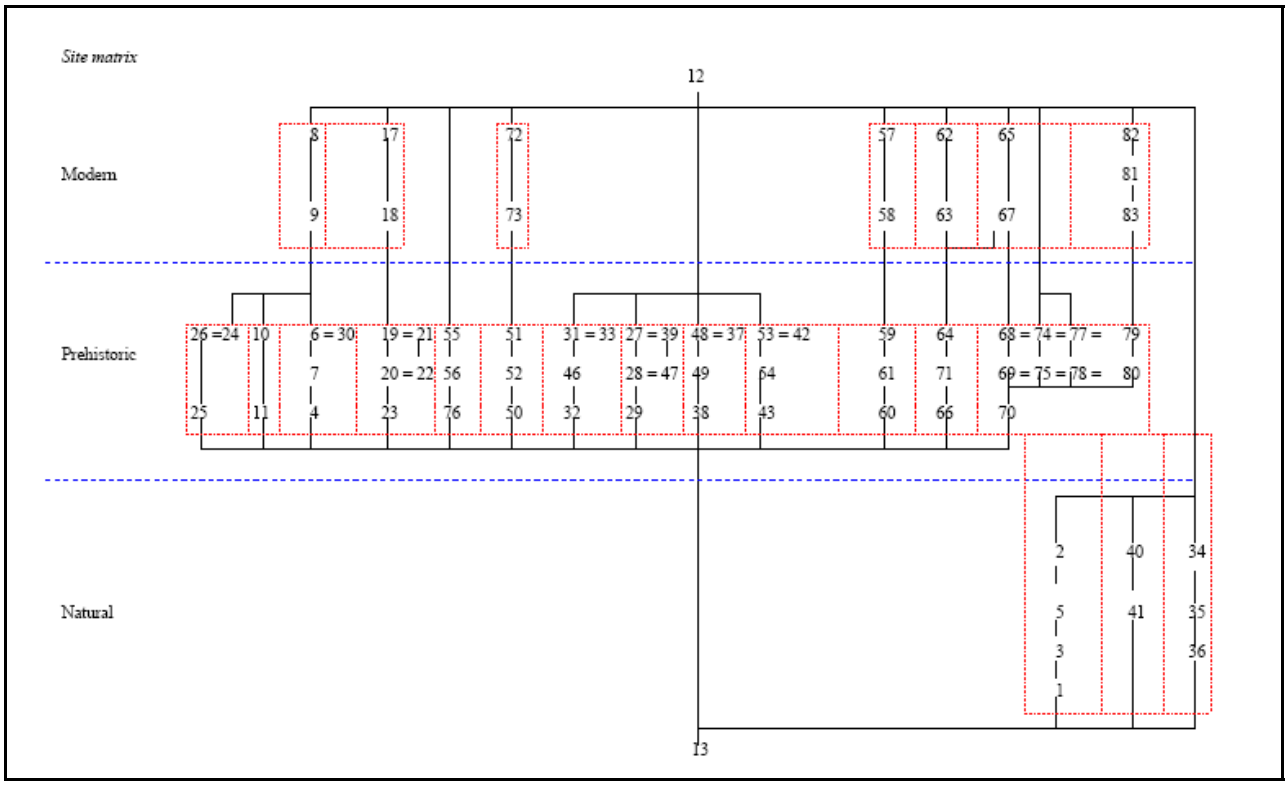

7.3 Segmented Ditch ("Pit Alignment") (Figure 7)

During the evaluation, a ring ditch was identified in Trench 3: this consisted of two shallow cut features 0.4m apart. This was interpreted as the surviving part of a ring-ditch. After the stripping of topsoil during the mitigation works, it became apparent that the separated shallow features were in fact part of a linear feature. This consisted of a series of sub-oval and a linear cut aligned in a north east to south west direction, extending beyond the area investigated. Overall it was at least 54m long and up to 0.9m wide.

In total 12 discrete cuts were identified (from north-east to south-west: 23, 32, 4, 11, 29, 38, 50, 76, 43, 60, 66, 70). Their respective dimensions are indicated in Table 1 below.

This segmented ditch comprised 12 discrete cuts, varying in length from 2.2 to over 16m, the width of the cuts was between 0.45 and 0.9m and the depth was 0.12 to 0.6m. The interval between the segments varied between 0.2 and 0.6m.

The individual segments were typically linear, with rounded termini and steep straight sides to a concave base. Several representative sections are shown below.

The fills of the segments were very similar, with either one or two distinct deposits identified. The main fill in each case was a dark, greyish-brown silty clay, containing occasional fragments of burnt sandstone ("pot boilers"). A number of these were collected for OSL dating. Several of the segments contained either a distinct initial fill of yellow silty clay, or lenses of yellow silty clay within the main fill: this material is interpreted as a water-deposited fraction of the up-cast redeposited within the cut from the adjacent bank. Where this deposit has an asymmetric form in section, the bulk of the deposit is distributed in an even number

of sections on the eastern and western sides. This makes it impossible to identify which side (if either) of the feature had an associated earthwork bank.

Table 1: Components of Segmented Ditch

Cut Number	Length (m)	Width (m)	Depth (m)	fills
23	>3.4	0.6	0.46	19=21, 20 = 22
32	2.6	0.6	0.34	46, 31 = 33
4	2.7	0.5	0.27	7, 6 = 30
11	2.3	0.5	0.12	10
29	2.2	0.5	0.27	28 = 47, 27 = 39
38	5.2	0.75	0.35	49, 48 = 37
50	2.5	0.75	0.38	52, 51
76	2.5	0.75	0.31	56, 55
43	2.65	0.5	0.55	53, 54
60	2.8	0.9	0.45	61, 59
66	2.9	0.45	0.4	71, 64
70	>16 <18.3	0.85	0.6	69 = 75 = 78 = 80, 68 = 74 = 77 = 79

Table 2: Intervals between segments

Cuts	Interval (m)
23-32	0.2
32-4	0.2
4-11	0.3
11-29	0.45
29-38	0.35
38-50	0.25
50-76	0.3
76-43	0.35
43-60	0.25
60-66	0.3
66-70	>0.6 <2.8

Segments 43 and 60 were encountered at the south western limit of the trench during the initial mitigation works. At the commencement of the excavation, this appeared to be a continuous linear feature (recorded as fill 44 and cut 45). However, it soon resolved into two distinct segments (subsequently recorded as cuts 43 and 60 respectively).

Segment 70 (>16m long, < 18.3m long) was sectioned at several points along its length, to establish whether or not it was constituted from several shorter cuts. No indications were found that this might have been the case. In retrospect, it might have been useful to have cut a longitudinal section down this entire length of ditch to look for evidence of a two-phase construction (see below for further discussion).

Figure 7: Detailed plan of area investigated during mitigation works showing pit alignment

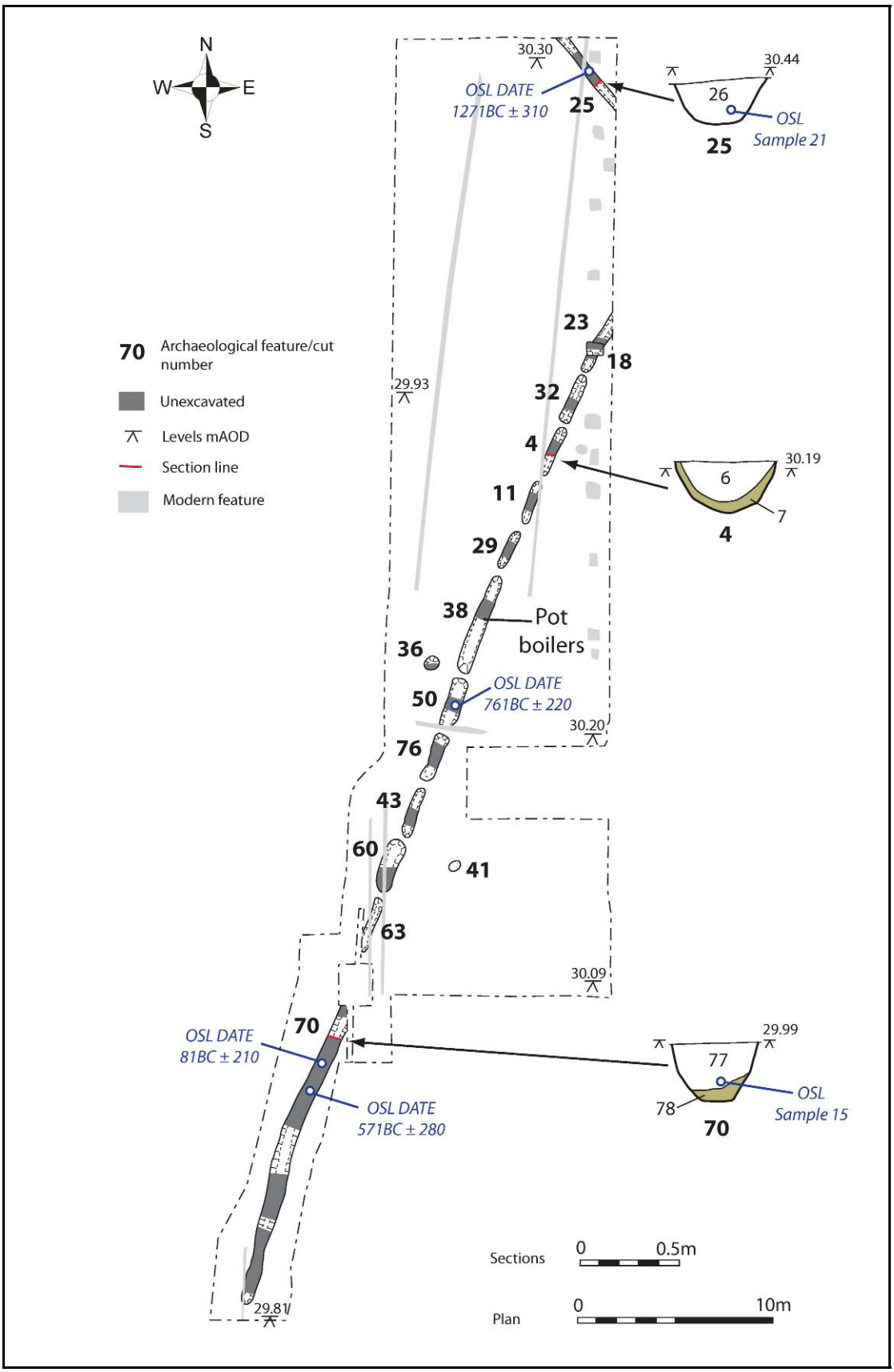

Figure 8: North-facing section through segmented ditch cut 70 (fills 77 and 78)

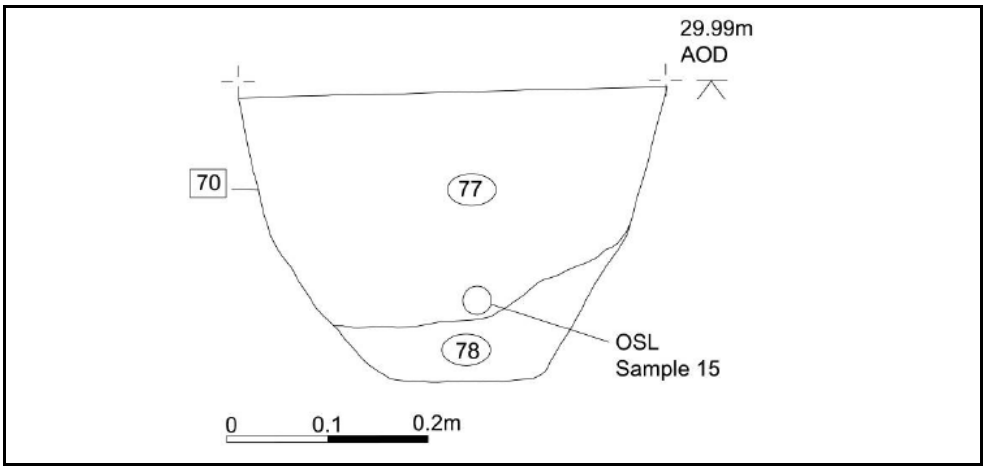

Figure 9: South facing section through ditch cut 4, fills 6 and 7.

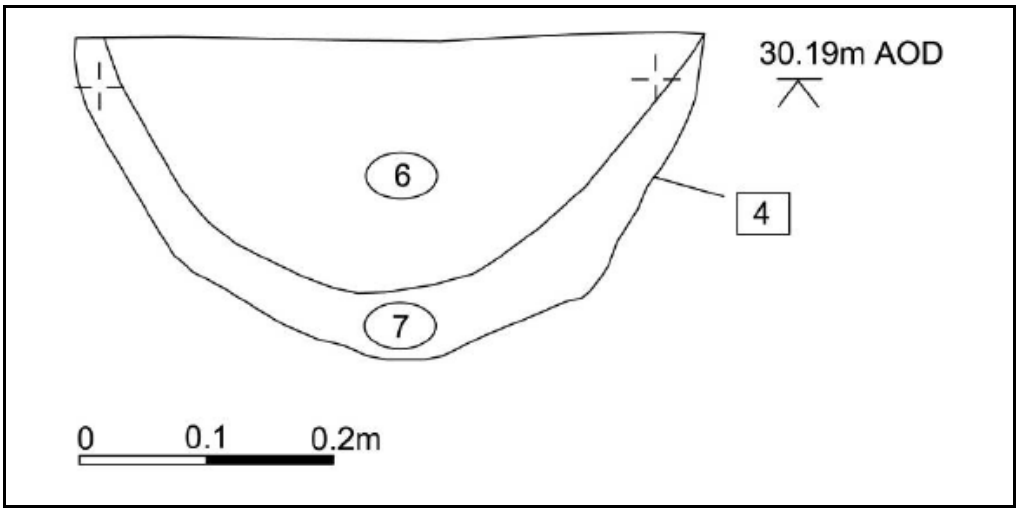

Figure 10: South facing section through ditch cut 25, fill 26

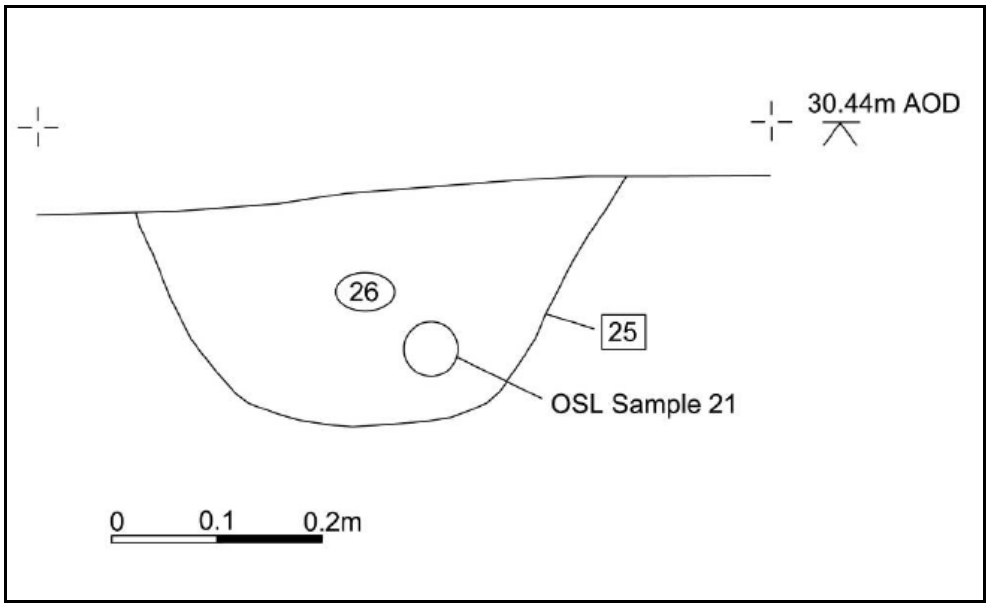

Figure 11: View to South West along line of segmented ditch during excavation, note position of caretaker's bungalow which was subsequently demolished and the line of the ditch followed through.

Figure 12: View to North East from southern limit of investigation showing the line of the segmented ditch. The area between the two metal fences was previously located behind and beneath the caretaker's bungalow.

Figure 13: South facing section through cut 38. Note lenses of yellowish clay within the fill. 1m scale

Figure 14: North facing Section through northern terminus of segment cut 11. Note line of modern land drain cutting across the feature. 20cm scale.

The segmented ditch was subject to truncation by later activities at the site: ploughing, the excavation of drainage ditches, the insertion of a sewer and inspection hole and groundworks for construction of the first school on the site. The level from which it was originally cut can therefore be considered to have been lost. Levels at the base of the cut decrease gradually from the northern limit (30.02m AOD) to the southern limit (29.59m AOD). The surviving depth of the cuts increases slightly from 0.46m to 0.6m, although there is some variation along its length (0.12- 0.6m). This indicates that the depth of the individual segments from the contemporary ground surface was not critical in their excavation, with the depth reflecting the underlying topography. Because the feature was not continuous, it did not have a primary water-management or drainage function.

Figure 15: Burnt Stone "Pot Boilers" from ditch fill 37 (cut 38)

7.4 Palaeoenvironmental analysis

Soil samples were recovered from nine fills from the segmented ditch (fills 6, 10, 21, 30, 31, 33, 37, 48 and 49 respectively). The samples were processed and analysed by Dr Deborah Jacques and her colleagues at PRS Limited. A full description of the findings is given in Appendix A below. In general, the preservation was poor, with ample evidence of contamination with modern material via bioturbation (i.e. modern rootlets in all samples examined). Most of the plant remains were restricted to fragments of unidentified charcoal. A single unidentified charred cereal grain, chaff from emmer/spelt wheat and crop weeds were recovered from the fills indicating cereal production and/or processing were taking place in the vicinity of the ditch prior to or during the time it was open. The species are characteristic of prehistoric or Romano-British period agriculture. The single burnt grain fragment was not used for carbon-14 dating- the potential for contamination suggested that OSL dating might be a more reliable use of the resources available for scientific dating. The assemblage was too small to be worthy of further analysis. However it clearly indicates that the segmented ditch was located in a cleared landscape adjacent to cereal production and processing.

7.5 Dating

Soil samples were taken from fills of two ditch segments (fills 77 and 51, cuts 70 and 51 respectively), and a sample of burnt stone potboilers were recovered from fill 77. These samples were forwarded to Dr Jean-Luc Schwenninger of the University of Oxford Laboratory for Archaeology and the History of Art. In addition a sample was recovered from the adjacent ditch cut 25 (fill 26). The samples, including adjacent samples of the natural clay were processed and analysed using the OSL dating technique, and the results are indicated in Table 3 below.

Figure 16: OSL dating sampling in progress

Table 3: OSL Dates for Segmented Ditch and Linear Cut 25

Oxford Lab Sample No	*sample type*	*CVS 08 Sample No*	*Fill*	*Cut*	*age before 2009*	*error margin*	*date*
X3405	sediment	15	77	70	2090	+/-210	81 BC
X3406	sediment	18	51	50	2770	+/-220	761 BC
X3408	burnt stone	24	77	70	2580	+/-280	571 BC
X3407	sediment	21	26	25	3280	+/-310	1271 BC

The dates from the segmented ditch are consistently located in the 1st Millennium BC. The dates have large error margins, but clearly place the infilling/silting of the ditch in the Mid to Late Iron Age, rather than Late Bronze Age-Early Iron Age (920 BC +/- 395) as suggested for a similar feature in the region (Brogan and Speak 2006, Speak pers.comm).

7.6 Initial Discussion

The operation and function of the segmented ditch at the site is open to interpretation. A number of observations and interpretations are suggested.

The segmented ditch is a significant boundary in the landscape, designed to signal the separation of the land to other humans.

The segmented ditch is unlikely to have been primarily used for stock control, since it is not continuous, although the gaps could be bridged with other materials (there were no signs of a palisade or stockade post-holes within or between the excavated portions).

The segmented ditch was not used for drainage: it was discontinuous and would not therefore have functioned in the manner of the later land drains, the desirability of which at this location is indicated by the modern drains observed at the site. It has been suggested that the cuts would have functioned as watering troughs for grazing animals. This is perfectly possible as an accidental outcome of their excavation, but would not appear to be a primary function: there is no evidence for erosion, metalling or routeways approaching any of the segments investigated here which might be expected from frequent use as a watering point for stock.

Evidence from Cambridgeshire has identified hedge-laying debris in the backfill of individual pits, suggesting that they are associated with adjacent hedges at least at one site, possibly established in a bank associated with the pits (Pollard 1996: 105-106). However at Castle View School there is no evidence with which to test for the presence or absence of an adjacent hedgerow.

The presence of burnt stone “potboilers” in several (but not all) of the segments may be part of a structured deposition, as has been posited elsewhere (Pollard 1996: 100, Luke 2008: 33).

It might be argued that the individual cuts were less significant than the upcast material, with the cuts serving as quarries for a continuous bank: this would account for the presence of both separate and continuous linear cuts in the same feature. Alternatively, the different forms within the same boundary feature may be indicative of “gang” working, with variation explained as arising from separate groups of workers (Luke 2008: 33).

It is possible that the linear feature was constructed in either a single or several phases. It may be posited that the feature was originally constructed from a series of separate pits, which have subsequently been cleared-out or re-established which has either deliberately or accidently transformed the form into continuous lengths of ditch. However, there is no stratigraphic evidence to test this hypothesis against and it can only remain a possibility.

The segmented ditch can only be related to one further feature: ditch cut 25.

7.7 Ditch Cut 25 (Figures 7 and 17).

Figure 17: Section through ditch cut 25. Scale 1m

This linear cut was located at the north eastern corner of the area of investigation. It was aligned north west to south east, 0.5m wide, >4.8m long and 0.25m deep. The ditch continued beyond the limit of excavation to the north and east. The cut was filled with a dark grey silty clay fill (24=26) which contained lenses of yellowish brown clay. The fill was partially truncated by a later land drain (9).

The fill was similar in nature to those filling the segmented ditch, and the alignment approximately (but not precisely) perpendicular to the segmented ditch. It was considered likely to be contemporary to the segmented ditch described above.

7.8 Dating

Samples were recovered from its fill and adjacent drift geology for OSL dating by the Oxford University Laboratory. The results of a single sample from fill 26 are indicated in Table 3 above alongside results for the segmented ditch. The date for fill 26 (sample number 21), was given as 3280 years before 2009, +/- 310, i.e. 1271 BC +/- 310 years. However, this date should be treated with some caution since repeat measurements gave scattered results, suggesting the presence of “older” grains in the sample, which had not been reset at the time of deposition (Jean-Luc Schwenninger, pers.comm 03.02.09). This gives an early date, from the Bronze Age, which significantly pre-dates the other archaeologically significant structure at the site. The uncertainty over the dating, and absence of a stratigraphic relationship with the segmented ditch means that it is not possible to confidently assert whether or not ditch cut 25 predates, is contemporary to or even post-dates the segmented ditch. The dating technique establishes that the fill was an ancient deposit, and therefore of archaeological significance.

Figure 18: OSL Sampling of the fill of ditch cut 25

7.9 Discussion

There was no direct physical or stratigraphic relationship between the segmented ditch and ditch 25: the projected point of interception is beyond the eastern limit of the excavation in Cartwright Road, where road construction is likely to have badly damaged or destroyed both features. It cannot be confidently asserted that the two linear features are contemporary: ditch 25 appears to be a continuous cut, in an area where the segmented ditch is constructed from shorter cuts, suggesting that even if they are broadly contemporary, they were not constructed at the same time. Since ditch 25 is narrower than the elements of the segmented ditch, it might be interpreted as a secondary feature. The two ditches constitute part of the division of the landscape into separate zones, a process which represents a shifting human perspective on relationships between groups and the landscape itself.

7.10 Modern Land Drains (Figure 19).

The site had a series of three parallel late 19th / early 20th Century land drains aligned approximately north east to south west (cuts 9, 58, 83, filled with 8, 57 and 81/82 respectively). These were recorded where they truncated the earlier segmented ditch. The cuts were narrow (0.18 – 0.3m wide) and up to 0.45m deep. The drain cuts were steep, straight-sided, tapering to a base 0.15m wide, and contained lengths of ceramic drain pipe. Individual pipes had an inverted 'U-section' with a flat base. The land drains related to the use of the area for agriculture during the late 19th and early 20th century. It can also therefore be assumed that the area was also subject to ploughing, either for crops or pasture improvement during the same period, which will have involved horizontal truncation of archaeological deposits in the area. This, as with any earlier ploughing, will have contributed to the formation of topsoil on the site and obscured the level from which the earlier ditches were cut.

Figure 19: Land drain cutting accross line of segmented ditch

7.11 Truncation from establishment of the school during the 1960's

The western and southern sides of the area of investigation were heavily disturbed, with a mixed deposit of modern building rubble (including plastic) located between the modern topsoil and upper surface of the boulder clay. This was interpreted as material from the construction of the school and caretaker's bungalow during the 1960s. The absence of a buried soil between the rubble and the underlying clay indicates that the area had been stripped of topsoil during the preparatory groundworks. This process will have partially or totally truncated archaeological deposits within the footprint of the adjacent school buildings. The rubble was removed using a machine excavator at the commencement of the archaeological investigation, and no archaeologically significant remains were identified beneath. The watching brief on the demolition and clearance of the school buildings identified widespread intrusion and disturbance during their construction: discrete areas were hand-cleaned to ensure that remains were not being missed.

Figure 20: Demolition debris from caretaker's bungalow overlying southern portion of site

7.12 Inspection chamber and sewer

A late 20th Century sewer and inspection chamber (cut 67, fill 65) partially truncated the segmented ditch towards the southern limit of investigations. This was not recorded in any further detail: it does illustrate how modern services can destroy archaeological remains, and their insertion gives an opportunity to look for ancient deposits.

7.13 Gas pipes

Two separate gas pipes were recorded within the area of investigation (cuts 73 and 63, fills 72 and 62). The pipes delivered gas to the school and caretaker's bungalow. The gas pipes were both late 20th Century in date, partially truncated the segmented ditch and are of no archaeological interest.

7.14 Tree Plantation Holes

A line of square cuts were observed adjacent to the eastern limit of investigation. These were clearly modern holes excavated to plant decorative trees next to the eastern boundary of the school. A single example was excavated (cut 18, fill 17), where it truncated a segment of the ditch (cut 23, fills 19=21 and 20=22). The cut was 0.7 x 0.8m and 0.46m deep with straight near vertical sides to a flat base. The fill of the tree-hole contained a modern steel nail and fragments of brick.

7.15 Modern topsoil

The topsoil at the site was a mid to dark grey clayey silt (context 12). This deposit was formed from both the post-medieval cultivation soil to the east of the area of investigation, and from more recently laid topsoil associated with the landscaping after the construction of the school.

8.0 DISCUSSION

The archaeological remains recorded at Castle View School represent a small, but significant contribution to our understanding of the prehistoric archaeology of the region.

Segmented ditches, or "pit alignments" are a well-established phenomenon in the archaeological record across England and Scotland (Lowe 1992, Martin 2008, Pollard 1996 Wilson 1978, Luke 2008), usually dated to the 1st Millennium BC, but also possibly as early as the Neolithic (Miket 1981, Lowe 1992: 135). The form of the individual pits is quite variable, with rectangular, circular, and sub-oval shapes identified to date.

Their presence in the landscape is clearly an act of division and definition of territory: however purely functional explanations do not adequately explain their role. The construction of earthworks was clearly within the technical capacity of Iron Age communities, and therefore the choice of this form, of separate pits or ditch segments is a deliberate selection from a repertoire of possibilities (including: fences, hedgerows, continuous ditches, standing stones).

There are numerous examples of boundary-marking having highly symbolic associations for the communities involved: for example the "beating of bounds" (Pollard 1996: 110) in which parishioners process around their boundary in the company of the local priest giving sacred value to the act of re-establishing the parish boundary. The ritual would end with the blessing of the land to encourage its productivity. It is worth noting that it is often difficult to distinguish between the functional and symbolic in many human activities, and the interpretation of the segmented ditch can be regarded in this light.

The establishment (and possible maintenance) of the boundary may be the key activity, and the defining characteristic here is the fragmentary nature of the boundary. It is possible to suggest a collective activity taking place, in which a community defines temporal and spiritual boundaries in the landscape, employing a practise which is highly individualised. It is suggestive of a tension between collective and individual identities within the communities.

The presence of potboilers in the backfill is no pure accident or functional disposal of domestic waste. It is the only artefact type recovered from the ditch fills, and reflects a deliberate selection. If it were simply the disposal of domestic waste from an adjacent settlement, a wider assemblage of finds including flint tools or working waste, ceramics and burnt bone would be expected. Structured artefact deposition in fills has been noted elsewhere (Pollard 1996: 111), although no continuous threads of meaning have been defined. The selection of potboilers for deposition at Castle View School is of interest: one possible explanation is that this artefact type, produced in the "heart" of the home and associated with the domestic, nourishing preparation of food, is selected to be carried out to the boundary, thereby projecting the domestic realm beyond the immediate household to the margins of the territory. It may be an act redolent of the relationship between the human community and the land- which is regarded as part of a holistic system of nourishment. Embedded within this could easily be either a collective or individual appropriation of land. The paucity of uniquely ritual or religious sites dating to the Iron Age may reflect the location

of such significance in other activities, for example the placing of votive offerings into ditch terminals, and pits during the Iron Age in the region (Petts and Gerrard 2006: 40).

The position and relationship between field boundaries in prehistoric landscapes are key pieces of information to inform debate of how early farming communities developed, related to each other and defined their relationship to the land (for example see Johnston, 2005). Any additional information on further boundaries in the vicinity and their respective sequence are critical in developing an understanding of this period in the region.

The arrival of pit alignments as a landscape feature elsewhere has been discussed as a product of wider societal change in their location. The features are not associated with otherwise marginal land, being colonised for the first time, and must therefore reflect a shift in perceptions of the relationship between human groups and the landscape they have inhabited for a long period of time.

The widespread adoption of this form of earthwork is intriguing: whilst its rationale may vary from one community to another, it would seem to provide a social activity suitable for many groups, and might therefore resolve a shared sociological challenge, such as a desire to define land rights at a time of increased pressure on the occupation of lowland sites (Luke 2008: 33).

There is insufficient data from the region to confidently model the structure of Iron Age communities. The construction of the pit alignments constitutes an activity which cannot be directly related to agricultural production, would absorb significant quantities of labour and is not likely to be the product of household-level decision-making. A degree of social authority extending across multiple families is indicated, consistent with large-scale communities rather than isolated small groups.

The Castle View School segmented ditch is aligned perpendicular to the grain of the landscape, which runs approximately east-west at this point, with the Wear to the south and Hylton Dene Burn to the north. This means that the boundary is not reinforcing a natural boundary, such as a water-course or topographic feature as noted elsewhere (Pollard 1996: 112-113). The alignment here cuts across the landscape, and is a more direct assertion of human control than might otherwise be the case.

The nearest comparable feature to the Castle View School segmented ditch is the pit alignment excavated at Fox Covert, Dinnington, 17 miles to the north west. This linear feature consisted of 131 individual sub-rectangular pits aligned approximately north north east to south south west and was at least 375m long (Brogan and Speak 2006: 13; unpublished notes kindly provided by Steve Speak of Tyne and Wear Museums). The earliest deposit in a Fox Covert pit has been dated to c900 BC by OSL dating, with the latest fill of the same pit dated to c280 AD. This indicates a Late Bronze Age/Early Iron Age establishment of the system, with a potentially very long period of maintenance into the third century AD.

The nearby site of Dehli Opencast at Blagdon Hall Estate, 2km north east of Fox Covert, had evidence for a further (undated) pit alignment on an approximate north north west to south south south east alignment (Jenkins 2006: 12). This was constructed from 20 sub-oval pits and was at least 114m long, continuing beyond the limit of investigation.

Elsewhere in the region, pit alignments have identified from aerial photos (e.g. at Dinnington, County Durham. Petts and Gerrard 2006: 35). At Dinnington the pit alignment was associated with a rectilinear Iron Age enclosure (ibid: 36).

The regional research framework notes the relative lack of field systems from the Iron Age in Lowland areas of the North East. At present the Castle View School remains are isolated from any adjacent contemporary settlements: future work in the area will hopefully link these findings into a broader understanding of settlements and landscape during the Iron Age. The excavation of, and application of OSL dating to the segmented ditch/pit alignment at Castle View School is consistent with objectives laid out in the regional research framework (Petts and Gerrard 2006: 135-141).

The work at Castle View School contributes to our understanding of the Iron Age in the lowland region: it has absolute dates locating it in the Iron Age, identifies an area under cultivation, extends our knowledge of the cleared landscape, identifies a divided and claimed landscape, and offers information for the exploration of social action in the form of the creation of the linear boundaries and structured deposition in their fills. The successful dating of potboilers using OSL demonstrates the potential for applying this technique to burnt stone recovered from archaeological contexts.

9.0 CONCLUSIONS

This report reflects the successful execution of part of a programme of archaeological work at Castle View School for Balfour Beatty Limited. The work represents mitigation of the impact of the construction programme on archaeological remains, as required in Condition 12 of planning consent reference 07/05268/LAP. The programme of works was undertaken at short notice, and was organised to facilitate the construction programme, which was not delayed by the archaeological fieldwork. It was possible to engage school students and staff in the works, providing an opportunity to contribute positively to the relationship between local residents and the construction team.

The archaeological work involved: the excavation and recording of a large area to the east of the main school building; a watching brief on adjacent groundworks; artefacts and palaeoenvironmental samples were recovered; the site records, artefacts and ecofacts have been analysed to produce a report on the archaeology of the site and the results have been discussed in relation to similar findings both in the region.

The excavation, recording and dating of the remains have made a small, but significant contribution to our understanding of the archaeology of the region. The results have been offered for publication in a forthcoming edition of the Durham Archaeological Journal.

10.0 BIBLIOGRAPHY

Brogan G and Speak S 2006 “Fox Covert”, in Archaeology in Northumberland Volume 16: 2006 by Northumberland County Council and Northumberland National Park

Haselgrove C., Armit I., Champion T., Creighton J., Gwilt A., Hill JD., Hunter F., Woodward A., 2001 Understanding the British Iron Age: an Agenda for Action ISBN 1 874350 37 X. Published by Wessex Archaeology. Available online at: http://www.personal.reading.ac.uk/~lascretn/IAAgenda.htm. Accessed 16th February 2009.

Jenkins C 2006 “The Archaeology of Opencast: Delhi, Ponteland” in Archaeology in Northumberland Volume 16: 2006 by Northumberland County Council and Northumberland National Park.

Johnston R 2005 Pattern without a plan: rethinking the Bronze Age co-axial Field Systems on Dartmoor, South West England. Oxford Journal of Archaeology Volume 24, Issue 1: 1–21 Blackwell Publishing Ltd.

Luke, M 2008 Life in the Loop: Investigation of a Prehistoric and Romano-British Landscape at Biddenham Loop, Bedfordshire. East Anglian Archaeology Report No 125.

Martin G 2008 Archaeological Desk-Based Assessment and Archaeological Evaluation on Land at Monkhill, Carlisle. Unpublished Archive Report Gery martin and Associates Report Number 25.

Petts D and Gerrard C 2006 Shared Visions: The North-East Regional Research Framework for the Historic Environment. Published by Durham County Council. ISBN 1-897585-86-1

Speak S (pers.comm) Extract from Fox Covert Excavation. Unpublished Report from Tyne and Wear Museums.

Strong P 1988 "Pit alignment and earthworks between Marygoldhill Plantation and Drakemire, Berwickshire", in Proceedings of the Society of Antiquities of Scotland Volume 118: 111-129

Towle A 2008a Castle View School, Sunderland: Report on an Archaeological Evaluation and Method Statement for Mitigation Works. March 2008, Unpublished SLR Consulting Report Ref 410-1625-00017b.

Towle A 2008b Castle View School, Sunderland: Supplementary Method Statement for Mitigation Works. August 2008, Unpublished SLR Consulting Report Ref 410-1625-00017c.

11.0 CLOSURE

This report has been prepared by SLR Consulting Limited with all reasonable skill, care and diligence, and taking account of the manpower and resources devoted to it by agreement with the client. Information reported herein is based on the interpretation of data collected and has been accepted in good faith as being accurate and valid.

This report is for the exclusive use of Balfour Beatty Limited; no warranties or guarantees are expressed or should be inferred by any third parties. This report may not be relied upon by other parties without written consent from SLR.

SLR disclaims any responsibility to the client and others in respect of any matters outside the agreed scope of the work.

Appendices

Appendix A: Palaeoenvironmental Report by PRS Limited

Palaeoecology Research Services

Assessment of biological remains from excavations at Castle View School, Sunderland, Tyne and Wear (site code: CVS08)

PRS 2008/72

Palaeoecology Research Services PRS
2008/72

Assessment of biological remains from excavations at Castle View School, Sunderland, Tyne and Wear (site code: CVS08)

by

Alexandra Schmidl, John Carrott, Deborah Jaques and Alex Beacock

Summary

Ten sediment samples recovered from deposits encountered during excavations at Castle View School, Sunderland, Tyne and Wear, were submitted for an assessment of their bioarchaeological potential. Archaeological features, including a post-hole and segmented ditch of possible late Bronze Age/Iron Age date, were encountered in an area located close to the school buildings.

Ancient biological remains recovered from the sediment samples were mostly restricted to small quantities of unidentifiable charcoal and traces of other charred plant remains, including an occasional cereal grain and a little chaff and a few seeds/fruits of crop weeds. Remains of onion couch and charred rhizome/root fragments were also identified and these may have derived from the burning of peat or turves. Overall, the remains were too few to be of any significant interpretative value. The charred cereal grain recovered from Context 30 (and possibly the charred chaff and seeds from Contexts 6 and 49) could provide material for radiocarbon dating, if required.

The assemblages of biological remains recovered were too small and too poorly preserved to warrant any further consideration.

KEYWORDS: CASTLE VIEW SCHOOL; SUNDERLAND; TYNE AND WEAR; ASSESSMENT; PREHISTORIC; LATE BRONZE AGE/IRON AGE; PLANT REMAINS; CHARRED PLANT REMAINS; CHARCOAL; CHARRED CEREAL GRAIN

Contact address for authors:

Palaeoecology Research Services
Unit 8
Dabble Duck Industrial Estate
Shildon
County Durham DL4 2RA

Prepared for:

SLR Consulting Ltd
Suite 9
Beech House
Padgate Business Park
Warrington
Cheshire WA1 4JN

22 September 2008

Assessment of biological remains from excavations at Castle View School, Sunderland, Tyne and Wear (site code: CVS08)

Introduction

Archaeological excavations were undertaken by SLR Consulting Ltd at Castle View School, Sunderland, Tyne and Wear (centred on NGR NZ 353 583) in August 2008, prior to a major programme of redevelopment at the site.

An initial evaluation in March 2008 found archaeological features, including a post-hole and ditch, of possible prehistoric date in one (Trench 3) of the three trenches examined. Further investigation (in August 2008) in the area (Trench 3 was located just to the east of the main school buildings) revealed a segmented ditch of probable late Bronze Age/Iron Age, constructed from discrete sections 1.5 – 4 metres long, separated by gaps of up to 0.5 metres wide.

Ten bulk sediment samples ('GBA'/'BS' *sensu* Dobney *et al*. 1992) were submitted to Palaeoecology Research Services Limited (PRS), County Durham, for an assessment of their bioarchaeological potential.

Methods

The lithologies of the samples were recorded using a standard *pro forma*. Subsamples from each were processed for the recovery of plant and invertebrate macrofossils, broadly following the techniques of Kenward *et al*. (1980). Prior to processing, the subsamples were disaggregated in water for 24 hours or more and their volumes recorded in a waterlogged state.

Plant and invertebrate remains in the processed subsample fractions (washovers and residues) were recorded briefly by 'scanning' (using a low-power microscope where necessary), identifiable taxa and other components being listed on paper. All of the residues were primarily mineral in nature and were dried before being recorded. Similarly, eight of the washovers were largely composed of mineral material and/or charred remains and were also dried prior to recording, whilst two washovers appeared to contain waterlogged plant material and invertebrate remains and were examined wet. Nomenclature for plant taxa follows Stace (1997).

During recording, consideration was given to the suitability of the remains for submission for radiocarbon dating by standard radiometric technique or accelerator mass spectrometry (AMS).

Results

The results are presented in context number order. Archaeological information, provided by the excavator, is given in square brackets. A brief summary of the processing method and an estimate of the remaining volume of unprocessed sediment follows (in round brackets) after the sample numbers.

Context 2 [secondary fill of post-pipe]
Sample 1/T (8 kg/6 litres sieved to 300 microns with washover; no unprocessed sediment remains)

Moist, mid grey (with some areas of slightly brownish-grey), stiff (working plastic), clay, with a minor component of moist, mid brown to mid orange-brown, unconsolidated, gritty, silty clay sand (clay often in 1-2 mm indurated lumps). Stones (2 to 20 mm) were present.

The small washover (~50 ml) was mostly of modern rootlets, with some sand, charcoal (to 12 mm), a few small pieces of coal (to 8 mm) and a trace of ?cinder (to 4 mm). Additionally, there were some ?beetle larvae fragments, earthworm egg capsules and a single seed of elder (*Sambucus nigra* L.) – almost certainly modern contaminants.

The large residue (dry weight 4.1 kg) consisted entirely of stones (to 38 mm) and sand.

Context 6 [ditch fill]
Sample 2/T (6.5 kg/5 litres sieved to 300 microns with washover; no unprocessed sediment remains)

Moist, light to mid grey to light to mid orange-brown to mid to dark grey (with some flecks of orange and yellow-orange), brittle to crumbly (working plastic) clay with some areas rather indurated. There was a minor matrix component of almost dry very light grey crumbly clay. Stones (6 to 20 mm), flecks of charcoal/charred seeds and modern rootlets were present in the sample.

The small washover (~100 ml) was mostly of modern rootlets, with some sand, charcoal (to 5 mm), traces of coal (to 7 mm) and cinder (to 6 mm), numerous earthworm egg capsules, occasional other modern invertebrate remains (including beetle legs), and more than 50 fragments of root/rhizome/twig (to 6 mm). In addition, a few charred botanical remains could be identified – including one bulb of onion couch (*Arrhenatherum elatius* (L.) P. Beauv. ex J. & C. Presl var. *bulbosum* (Willd.) St-Amans), two glume bases of emmer/spelt wheat (*Triticum dicoccum* Schübl./*T. spelta* L.), one cotyledon of tare (*Vicia hirsuta* (L.) Gray/*V. tetrasperma* (L.) Schreb.) and one very poorly preserved spikelet fork of ?hulled wheat.

The small residue (dry weight 0.986 kg) was mostly stones (to 90 mm) and sand, with a few fragments of 'mineralised' charcoal (to 20 mm; 1 g).

Context 10 [ditch fill]
Sample 7/T (3 kg/2 litres sieved to 300 microns with washover; approximately 12 litres of unprocessed sediment remain)

Moist, varicoloured (jumbled shades of brown, grey and grey-brown from light to mid to dark, with occasional patches of light to mid orange-brown and light yellow-brown), stiff and slightly sticky to soft (working plastic), slightly silty clay. Stones (2 to 6 mm) and occasional flecks of charcoal were present

The small washover (37 g, dried) was mostly of sand, with some modern rootlets, unidentified charcoal (to 10 mm), a little coal (to 5 mm), and seven charred fragments of root/rhizome (to 5 mm).

The small residue (dry weight 0.220 kg) was of stones (to 44 mm) and sand, with traces of ?charcoal (to 6 mm; <1 g).

Context 21 [fill of cut 23]
Sample 12/T (3kg/2.5 litre sieved to 300 microns with washover; approximately 12 litres of unprocessed sediment remain)

Moist, predominantly mid grey and mid grey-brown (colours jumbled), with patches of light to mid orange and dark grey, stiff (working plastic), very slightly silty clay, with a minor component of mid yellowish-orange clay. Stones (6 to 20 mm), occasional fragments of ?charcoal and modern rootlets were present.

The small washover (21 g, dried) was almost entirely of sand, with some modern rootlets and unidentified charcoal (to 5 mm), traces of coal (to 5 mm) and four charred fragments of root/rhizome (to 5 mm).

The tiny residue (dry weight 0.221 kg) was of stones (to 32 mm) and sand, with a few fragments of charcoal (to 10 mm; 1g).

Context 30 [fill of ditch 4]
Sample 3/T (3 kg/2.5 litres sieved to 300 microns with washover; approximately 12 litres of unprocessed sediment remain)

Moist, jumbled mix of light yellow-brown, mid brown and mid blueish-grey, with some patches of dark grey, stiff and slightly sticky (working more or less plastic), silty clay. Stones (of over 60 mm) and flecks of ?charcoal were present.

There was a small washover (22 g, dried) which was mostly of sand, with some modern rootlets, a little unidentified charcoal (to 5 mm), coal (to 10 mm) and a few stones (to 10 mm). Other charred botanical remains were restricted to a single unidentifiable cereal grain (distorted and puffed) and seven fragments of root/rhizome (to 5 mm).

The small residue (dry weight 0.288 kg) was almost entirely of stones (to 65 mm) and sand, with a little coal (to 23 mm; 1 g) and charcoal (to 7 mm; <1 g).

Context 31 [fill of ditch 32]
Sample 4/T (3 kg/2 litres sieved to 300 microns with washover; approximately 13 litres of unprocessed sediment remain)

Just moist, varicoloured (a jumble of mid orange-brown and mid to dark grey, with occasional patches of light brown and more frequent areas of dark grey), brittle to crumbly (working plastic and slightly sticky when wetted), slightly sandy silty clay. Stones (6 to 20 mm), modern rootlets and occasional flecks of charcoal were present

The very small washover (12 g, dried) was mostly of sand and modern rootlets, with some coal (to 6 mm) and unidentified charcoal (to 5 mm), together with fourteen charred fragments of root/rhizome/twig (to 7 mm).

The small residue (dry weight 0.277 kg) was of stones (to 38 mm) and sand, with a few fragments of charcoal (to 8 mm; 1 g).

Context 33 [fill of ditch 32]
Sample 6/T (3 kg/2.5 litres sieved to 300 microns with washover; approximately 12 litres of unprocessed sediment remain)

Just moist, predominantly mid to dark blueish-grey, with patches of brown (shades from light to mid to dark) and mid yellow-brown (also hints of mid orange-brown, probably from decayed root trace), brittle and crumbly (working more or less plastic), slightly silty clay. Stones (6 to 20 mm) were also present, as were some modern rootlets.

The tiny washover (12 g, dried) consisted mostly of sand, undisaggregated sediment lumps and modern rootlets, with a little coal (to 10 mm), unidentified charcoal (to 10 mm) and 18 charred fragments of root/rhizome (to 10 mm).

The small residue (dry weight 0.21 kg) was mainly stones (to 33 mm) and sand, with a little charcoal (to 8 mm; <1 g) and a few charred fragments of root/rhizome (to 8 mm).

Context 37 [fill of ditch 38]
Sample 5/T (3 kg/2.5 litres sieved to 300 microns with washover; approximately 12 litres of unprocessed sediment remain)

Just moist, varicoloured (jumble of light yellow-brown, light to mid and mid brown, and mid grey, with some patches of/streaks of light and dark grey), stiff and very slightly sticky (working more or less plastic), very slightly sandy silty clay.

The small washover (22 g, dried) was mostly sand, with some modern rootlets, a little unidentified charcoal and traces of coal (to 5 mm). Additionally, five charred fragments of root/rhizome (to 5 mm) were noted.

The tiny residue (dry weight 0.196 kg) consisted of stones (to 24 mm) and sand, with a little coal (to 9 mm; <1 g) and an unidentified land snail (4 mm in maximum dimension; < 1g).

Context 48 [upper fill of cut 50]
Sample 13/T (3 kg/2.5 litres sieved to 300 microns with washover; approximately 12 litres of unprocessed sediment remain)

Moist, predominantly mid brown to mid grey-brown (colours jumbled), with patches of light orange/orange-brown and streaks of grey, stiff (working plastic), very slightly silty clay. Coal and modern rootlets were present.

There was a small washover (18 g, dried) which was almost entirely of sand, with some modern rootlets, unidentified charcoal (to 5 mm), coal (to 5 mm), traces of cinder (to 3 mm) and four charred fragments of root/rhizome (to 5 mm).

The small residue (dry weight 0.212 kg) was mainly of stones (to 34 mm) and sand, with a little slag (to 10 mm; <1 g), cinder (to 22 mm; 2 g) and traces of charcoal (to 6 mm; <1 g).

Context 49 [lower fill of cut 50]
Sample 14/T (3 kg/2.5 litres sieved to 300 microns with washover; approximately 12 litres of unprocessed sediment remain)

Moist, varicoloured (a jumble of light to mid orange-brown, mid brown and mid and mid to dark grey, with occasional patches of light blueish-grey), stiff (working plastic), very slightly sandy slightly silty clay. Stones (6 to 20 mm) and occasional flecks of ?charcoal were present.

The small washover (30 g, dried) was mostly of sand, with some modern rootlets, unidentified charcoal (to 5 mm), coal (to 5 mm) and nine charred fragments of root/rhizome (to 5 mm). Other identifiable charred plant remains were restricted to a single glume base of emmer/spelt wheat and one nut of sedge (*Carex*).

The small residue (dry weight 0.197 kg) was mainly sand and stones (to 24 mm), with a few fragments of charcoal (to 9 mm; <1 g) and a small fragment of ceramic (to 7 mm; <1 g) of modern appearance.

Discussion and statement of potential

Ancient plant remains recovered from the processed subsamples were mostly restricted to small amounts of unidentified charcoal. A single charred cereal grain and traces of chaff (glume bases and spikelet fork) and crop weeds were also recovered from three of the deposits (Contexts 6, 30 and 49); these were

presumably charred accidentally during crop processing or food preparation, but were few in number suggesting that such activities were not undertaken in the immediate locality. The assemblage was too small to be of any further interpretative value.

All of the subsamples gave trace amounts of charred fragments of rhizome/root (together with a single bulb of onion couch from Context 6) which may have derived from the burning of peat or turves (see Hall 2003) but, again, these were too few for reliable interpretation.

The charred cereal grain from Context 30 (and possibly the charred chaff and seeds from Contexts 6 and 49) would provide sufficient suitable material for radiocarbon dating via accelerator mass spectrometry (AMS), if required.

Recommendations

No further study of the current material is warranted and, in view of the scarcity of the remains and their poor preservation, it is unlikely that any future archaeological interventions at this site will recover interpretatively valuable assemblages of biological remains.

However, processing of the remaining sediment from Contexts 30 and 49 *may* provide additional material suitable for radiocarbon dating should this be required. [No unprocessed sediment remains for Context 6].

Retention and disposal

The small quantities of remains recovered from the evaluation subsample should be retained as part of the physical archive of the site.

Unless required for purposes other than the study of biological remains or the recovery of suitable material for radiocarbon dating, the remaining sediment may be discarded.

Archive

All material is currently stored by Palaeoecology Research Services (Unit 8, Dabble Duck Industrial Estate, Shildon, County Durham), along with paper and electronic records pertaining to the work described here.

Acknowledgements

The authors are grateful to Andy Towle, of SLR Consulting Ltd, for providing the material and the archaeological information.

References

Dobney, K., Hall, A. R., Kenward, H. K. and Milles, A. (1992). A working classification of sample types for environmental archaeology. *Circaea, the Journal of the Association for Environmental Archaeology* **9** (for 1991), 24-6.

Hall, A. (2003). Recognition and characterisation of turves in archaeological occupation deposits by means of macrofossil plant remains. *Centre for Archaeology Report* **16/2003**. English Heritage.

Kenward, H. K., Hall, A. R. and Jones, A. K. G. (1980). A tested set of techniques for the extraction of plant and animal macrofossils from waterlogged archaeological deposits. *Science and Archaeology* **22**, 3-15.

Stace, C. (1997). *New flora of the British Isles: 2nd edition*. Cambridge: Cambridge University Press

Appendix B: Index to Archive

The site records consist of: 83 context sheets, 40 site drawings and 141 photographs with supporting indices. Further elements in the archive include copies of the evaluation report and mitigation method statement as well as this report. Arrangements are in place to submit the archive to Alexandra Croon, Arbeia Roman Fort, Baring Street, South Shields, Tyne and Wear, NE33 2BB. On approval of this report by the Tyne and Wear Archaeologist, an OASIS form will be completed.

Queries concerning the results should be addressed to:

Dr Andy Towle, SLR Consulting, Suite 9, Beech House, Padgate Business Park, Padgate, Warrington, WA1 4JN, tel: 01925 827218, e-mail: atowle@slrconsulting.com

AYLESBURY
7 Wornal Park, Menmarsh Road, Worminghall, Aylesbury, Buckinghamshire, HP18 9PH
T: 01844 337380 / F: 01844 337381

BATH
Westcross House, 73 Midford Road, Bath, Somerset, BA2 5RT
T: 01225 832832 / F: 01225 834343

BRADFORD-ON-AVON
Treenwood House, Rowden Lane, Bradford-on-Avon, Wiltshire, BA15 2AU
T: 01225 309400 / F: 01225 309401

BRISTOL
109 Pembroke Road, Clifton, Bristol, Avon, BS8 3EU
T: 0117 906 4280 / F: 0117 317 9535

CAMBRIDGE
8 Stow Court, Stow-cum-Quy, Cambridge, Cambridgeshire, CB25 9AS
T: 01223 813805 / F: 01223 813783

CARDIFF
Fulmar House, Beignon Close, Ocean Way, Cardiff, CF24 5HF
T: 02920 491010 / F: 02920 487903

CHELMSFORD
Unit 77, The Waterhouse Business Centre, 2 Cromer Way, Chelmsford, Essex, CM1 2QE
T: 01245 392170 / F: 01245 392171

EDINBURGH
No. 4 The Roundal, Roddinglaw Business Park, Gogar, Edinburgh, EH12 9DB
T: 0131 335 6830 / F: 0131 335 6831

EXETER
The Innovation Centre, Rennes Drive, University of Exeter Campus, Exeter, EX4 4RN
T: 01392 247913 / F: 01392 425246

FARNBOROUGH
The Pavilion, 2 Sherbourne Road, South Farnborough, Hampshire, GU14 6JT
T: 01252 515682 / F: 01252 512274

GLASGOW
4 Woodside Place, Charing Cross, Glasgow, G3 7QF
T: 0141 353 5037 / F: 0141 353 5038

HUDDERSFIELD
Westleigh House, Wakefield Road, Denby Dale, Huddersfield, West Yorkshire, HD8 8QJ
T: 01484 860521 / F: 01484 868286

KNARESBOROUGH
Conyngham Hall Business Centre, Knaresborough, Yorkshire, HG5 9AY
T: 01423 799175 / F: 01423 799173

MAIDSTONE
19 Hollingworth Court, Turkey Mill, Maidstone, Kent, ME14 5PP
T: 01622 609242 / F: 01622 695872

NEWCASTLE-UPON-TYNE
Sailors Bethel, Horatio Street, Newcastle-Upon-Tyne, Tyne and Wear, NE1 2PE
T: 0191 261 1966 / F: 0191 230 2346

NOTTINGHAM
Aspect House, Aspect Business Park, Bennerley Road, Nottingham, NG6 8WR
T: 0115 964 7280 / F: 0115 964 1576

REDDITCH
Brockhill Court, Brockhill Lane, Redditch, Worcestershire, B97 6RB
T: 01527 597000 / F: 01527 584408

SHREWSBURY
Mytton Mill, Forton Heath, Montford Bridge, Shrewsbury, Shropshire, SY4 1HA
T: 01743 850170 / F: 01743 850868

WARRINGTON
Suite 9 Beech House, Padgate Business Park, Green Lane, Warrington, Cheshire, WA1 4JN
T: 01925 827218 / F: 01925 827977

www.slrconsulting.com

solutions for today's environment