ARCHAEOLOGICAL
SERVICES
DURHAM UNIVERSITY

on behalf of
Swaledale and Arkengarthdale
Archaeology Group

High Harker Hill
Richmondshire
North Yorkshire

archaeological excavation

report 3032
September 2013

Durham
University

Contents

Figures

South Road · Durham · DH1 3LE · tel 0191 334 1121 · fax 0191 334 1126
archaeological.services@durham.ac.uk · www.dur.ac.uk/archaeological.services

1. Summary

The project

1.1 This report presents the results of an archaeological excavation conducted on the side of Grove Beck Gill at High Harker Hill, Richmondshire, North Yorkshire. The works comprised the excavation and recording of a section through part of the Grinton-Fremington Cross-Valley Dyke System, with associated palaeoenvironmental sampling and radiocarbon dating.

1.2 The works were conducted by the Swaledale and Arkengarthdale Archaeology Group under the supervision of Archaeological Services Durham University.

Results

1.3 Detailed profiles were recorded for each ditch. No artefacts were recovered. Palaeoenvironmental samples were taken from the fills of both ditches. Analysis of these, together with radiocarbon dating, suggests a pre-conquest context for the construction of the earthworks, as this is the date of the earlier silts, with the remainder of the ditches probably silting up during the 11th-15th centuries AD in an environment dominated by open heathland vegetation.

2. Project background

Location (Figure 1)

2.1 The site is located at High Harker Hill, near Grinton, Swaledale, Richmondshire, North Yorkshire (NGR centre: SE 02297 96863). It lies within the Yorkshire Dales National Park, with open moorland extending to all sides and with the village of Grinton to the north-east.

Objective

2.2 The objective of the scheme of works was to excavate and record a coherent section through the dyke system, in order to understand the construction of the monument, and to recover dating and palaeoenvironmental evidence, in advance of its further erosion.

Methods statement

2.3 The works have been undertaken in accordance with a Project Design provided by Archaeological Services Durham University (reference PC12.119rev2) and approved by English Heritage, and in accordance with Scheduled Monument Consent (ref. S00037542, SAM 24560).

Dates

2.4 Fieldwork was undertaken between the 6th and the 10th of August 2012. This report was prepared for September 2013.

Personnel

2.5 Fieldwork was conducted by a volunteer team from the Swaledale and Arkengarthdale Archaeology Group (SWAAG), supervised by Mark Randerson. This report was prepared by Mark Randerson, with illustrations by David Graham and Janine Watson. Plant macrofossil assessment and report preparation were conducted by Lorne Elliott. Pollen analysis was undertaken by Dr Jim Innes and Dr Bruce Albert. Pollen preparation was by Dr Carrie Drew. Bulk sample processing was by Janet Beveridge. The Project Manager was Peter Carne. The project was overseen by Andy Hammon and Neil Redfern on behalf of English Heritage and Robert White on behalf of the Yorkshire Dales National Park Authority.

Archive/OASIS

2.6 The site code is **SHH12**, for **S**waledale **H**igh **H**arker Hill 20**12**. The archive is currently held by Archaeological Services Durham University and will be transferred to Reeth museum in due course. The palaeoenvironmental residues were discarded following examination. The flots and charred plant remains will be retained at Archaeological Services Durham University. Archaeological Services Durham University is registered with the **O**nline **A**cces**S** to the **I**ndex of archaeological investigation**S** project (**OASIS**). The OASIS ID number for this project is **archaeol3-155572**.

3. Landuse, topography and geology

3.1 At the time of the works, the excavation area comprised an area of open, managed moorland. The sections were excavated on the eastern side of a washout gully associated with Grove Beck Gill, serving a storm gutter to the north.

3.2 The survey area was locating on steeply-sloping ground on a north-facing dipslope on the south side of Swaledale. Ground level generally fell to the north, dropping to the River Swale in the valley bottom. The washout watercourse reached a depth of over two metres, with steep, irregular, loose sides. The sections were cut into ground which sloped sharply downwards to the west, where the base of the washout ran.

3.3 The underlying solid geology of the area comprises Tournaisian and Viséan limestone of the Lower Carboniferous series, with Upper Carboniferous Millstone Grit further to the south. These are overlain by bolder clay and morainic drift.

4. Historical and archaeological background

4.1 The Grinton-Fremington Dyke system is the most visible man-made feature in Swaledale that pre-dates lead mining. The earthworks consist of a series of banks and ditches, running on both sides of the Swale valley. The system has been discussed in several previous works. A brief overview of these is given here.

Previous archaeological works

4.2 In the area of High Harker Hill, the dyke system consists of a substantial southern ditch positioned high on the natural scarp, with a counterscarp bank to the north. A slighter, less defined ditch and bank lie further downslope to the south, following a parallel course (Figure 6). No previous excavations through the earthwork have been identified. Charcoal from a sample of a possible old turf line exposed by erosion near to the base of the one of the ditches has provided a late medieval radiocarbon date.

Historical assessment

4.3 The Grinton-Fremington Dyke System has been interpreted as dating from several different periods. The system has been seen as being constructed as part of a series of Brigantian defences against Roman conquest, protecting Stanwick against a rear attack or to cover a postulated line of retreat (Raistrick 1968, 64), or as part of native British resistance to Anglo-Saxon invasion. They have been interpreted as elements of medieval deer management, possibly connected to a deer park. Because of the relationship which part of the dyke system has to a series of later prehistoric or Romano-British fields and earthworks near to Reeth, an early medieval date has been proposed (Flemming 1998, 24). The earthwork system was studied and catalogued in 1985 (Laurie 1985, 135-162).

5. The excavation

Introduction

5.1 Three separate sections were excavated on the east side of Grove Beck, where natural erosion from the watercourse had exposed elements of the ditch system (Figure 3). The excavation of these sections involved the cleaning and cutting back of the eroded slope, with the minimal amount of disturbance caused to the monument in each area. The lower, northern ditch and possible bank were exposed in one continuous section. However, land slippage and erosion of the bank caused by the washout meant that a ‘stepped’ section was necessary for the southern part of the earthwork, with the section through the embankment set 2.1m to the east of that of

the ditch excavation. Animal disturbance, particularly rabbit burrowing, was evident in all of the excavation area, most notably in the southern ditch section.

The southern (upper) ditch

5.2 Natural subsoil, a moderately compact light yellow-brown slightly sandy silty clay [28] was exposed across the whole of the base of the southern Section 4 (Figure 7). This was cut through by a wide, shallow ditch cut [F26: 1.6m wide, 0.73m deep] with moderate to gently sloping sides and a smooth, rounded base. Toward the centre of this base, the cut formed a narrow, steeply-sided gully, making a shallow gully (like an 'ankle-breaker') which ran along the length of the ditch cut. This had a smooth, flat base, and may have been used for drainage within the ditch or for clearing out washed-in material, suggesting that the ditch was initially maintained. This channel contained a fill of light yellowish grey moderately compact clayey silt [27: 0.32m wide, 0.09m thick], with moderate inclusions of small to medium angular gravel. This was overlain by a more substantial deposit of soft light grey sandy clay [3: 4.6m wide, 0.18m thick] which lay across the base of the ditch. This was interpreted as the first main silting-up of the ditch. It was covered by a thin layer of soft, plastic fine black silt [2: 4.58m wide, 0.04m thick], which may have been laid down by the accumulation of organic material in the ditch.

5.3 These layers were sealed by a main fill deposit [1: 4.55m wide, 0.47m thick] of loose, friable mid yellow-brown fine silty sand. Numerous thin horizontal layers and lenses, ranging in colour from yellow to brown, were visible throughout this deposit, indicating that it had been laid down when the ditch contained standing water. Above this, a deposit of soft, black loose organic silt containing occasional pea grit [25: 3.85m wide, 0.2m thick] was exposed. This was a far more homogenous layer, and may have been caused by the formation of topsoil or a turf line in the mainly backfilled ditch. It was covered by a layer of soft dark brown clayey silt, with very frequent inclusions of small to medium sub-angular and sub-rounded gravel [24: 3.85m wide, 0.26m thick]. This was very different in character to the underlying deposit [25]. However, it did not appear to be a deliberate backfill, and was more probably hillwash, deposited by water action from the higher southern side of the ditch. The ditch was sealed by a layer of topsoil and turf [23: 0.12m thick].

5.4 To the north, the remains of the upcast bank were investigated by Section 3 (Figure 8). Natural subsoil [20] was again exposed across the base of the whole section, with the northern edge of the ditch cut [F22] and continuation of main fill [21=1] observed on the south side of the excavation area. In the centre of the area, a narrow lens of moderately compact mid grey-brown clayey silt [18: 1.95m wide] was exposed. This reached a maximum thickness of 0.18m in the centre of the deposit, but tapered away to both the north and the south, lying directly on top of natural subsoil [20]. This was interpreted as the eroded remains of the upcast bank, which could be seen in the ground further east of the excavation area. It was covered by a thin layer of hillwash [19: 0.25m thick], a continuation of deposit [24] to the south, and sealed by a layer of topsoil and turf [17: 0.18m thick].

The northern (lower) ditch

5.5 A natural subsoil of moderately compact light yellow-brown slightly sandy silty clay [15] containing frequent medium sub-angular stones was exposed across the base of the northern section. A wide, gently-sloping ditch cut [F16: 4.17m wide, 0.6m deep] with a rounded, smooth base cut through these natural deposits. In the very base of

the ditch, a series of three very thin laminated deposits was exposed. These layers [14: 0.03m thick], [13: 0.06m thick], and [12: 0.09m thick], made of light grey silty clay and soft black silt, had been formed by the initial silting-up of the ditch. They were sealed by a further thin layer of loose black silt [11: 3.45m wide, 0.05m thick] which appeared to have been formed by an equal process to deposit [2] further to the south, and which also lay across the width of the ditch. This was overlain by a main fill of loosely compact light yellow-brown fine sandy silt [10: 3.45m wide, 0.35m thick], which contained frequent thin horizontal lenses, and was very similar in character to deposit [1] and which had been formed in standing water.

5.6 Deposit [10] was truncated to the north and south by two narrow recuts, intended to re-define the partially backfilled ditch (Figure 9). Both these recuts [F7: 2.15m wide, 0.32m deep] and [F9: 1.85m wide, 0.2m deep] were very similar in profile, with gently sloping sides and smooth, rounded bases, and both contained homogenous fills [6] and [8] of loosely compact friable yellow-brown sandy silt with inclusions of occasional small sub-angular gravel. To the south of ditch cut [F16], a narrow deposit of mid to light grey-brown clayey silt [30: 2.35m wide, 0.1m thick] was exposed. This lay on top of subsoil [15] and ran down the natural slope of the ground from the ditch. It is possible that, like [18] to the south, this was the remains of the upcast bank associated with the cutting of the ditch. However, this area had been truncated by former washout channels and land slippage, and so it is not possible to be certain about this interpretation. Both [30] and ditch [F16] were overlain by a deposit of very dark brown soft slightly sandy organic silt [5], similar to [25] to the south, which was in turn overlain by a layer of hillwash [29: 2.05m wide, 0.11m thick]. A layer of topsoil and turf [4: 0.4m thick] lay across the whole of the excavation area.

6. Palaeoenvironmental evidence and radiocarbon dating

Plant macrofossil assessment

Methods

6.1 An assessment was carried out on bulk samples of several of the ditch fills and the possible remains of the upper bank. The samples were manually floated and sieved through a 500μm mesh. The residues were examined for fruitstones, nutshells, small bones, charcoal, shells, pottery, glass and industrial residues, and were scanned using a magnet for ferrous fragments. The flots were examined at up to x60 magnification using a Leica MZ7.5 stereomicroscope for waterlogged and charred botanical remains. Identification of these was undertaken by comparison with modern reference material held in the Environmental Laboratory at Archaeological Services Durham University. Plant nomenclature follows Stace (1997). Habitat classification follows Preston *et al.* (2002).

6.2 Where possible, charcoal fragments were identified, in order to provide material suitable for radiocarbon dating. The transverse, radial and tangential sections were examined at up to x600 magnification using a Leica DMLM microscope. Identification was assisted by the descriptions of Hather (2000) and Schweingruber (1990), and modern reference material held in the Environmental Laboratory at Archaeological Services Durham University.

Results

6.3 Finds and diagnostic plant macrofossil remains were absent from the samples. Charred remains consisted of a few sedge nutlets from ditch fill context [3] and heather twigs and flower heads from six of the samples. These were abundant in layer [2], a black, organic-rich layer which also comprised large quantities of humified material. Fly puparia and insect remains were recorded in contexts [1] and [2]. A small fragment of oak charcoal (20mg) was identified from context [2] and a small fragment of willow/poplar charcoal (22mg) was identified from context [3]. These charcoal fragments were sent for radiocarbon dating. A bulk sediment sample of context [11] was also sent for radiocarbon dating. The results of the assessment are presented in Appendix 1 Table 1.2.

Discussion

6.4 Due to the absence of diagnostic palaeoenvironmental remains the plant macrofossil assessment provides little information about the age or nature of the deposits. The charred remains of heather and sedges are consistent with moorland clearance burning.

Pollen analysis

Methods

6.5 The sediments in the two ditch profiles at High Harker Hill were investigated for pollen content and the results are presented in Figures 4 and 5. Samples were sub-sampled and processed using standard techniques for the extraction of pollen and spores (Moore *et al.* 1991). A pollen sum of at least 200 grains of dry land taxa was counted for each level, and in many cases more.

Results

6.6 The upper ditch assemblage was dominated by *Calluna* (heather) pollen which accounted for over 60% of total land pollen in every counted level, rising to over 90% in the thin black humic layer (context 2). The sediments below this black layer, in context [3], have high values for woody taxa, particularly *Corylus* (hazel) and *Betula* (birch), although a change to very high *Calluna* percentages occurs higher in the unit, perhaps because of clearance of this scrubby woodland, although microscopic charcoal percentages are low. There is some recovery of woody taxa in the sandy silt sediments of context [1], above the thin black layer, but the dominance of *Calluna* remains very strong. There are some pollen records of open ground with Poaceae (grass) and a variety of grassland herbs in this upper assemblage, suggesting that some open areas existed, but contemporary pollen studies have shown that *Calluna* percentages of this magnitude reflect an almost entirely heather covered ground surface on the moorland around the site (Evans & Moore 1985). This heather moorland pollen assemblage supports the early to late medieval radiocarbon dates for the site.

6.7 The pollen results from the sediment profile of the lower ditch are very similar to those of the upper ditch deposits, being heavily dominated by *Calluna*, with background levels of Poaceae and *Corylus*. Frequencies vary little through the whole profile and although there is some slight increase in values for tree types in the upper levels, this is insignificant. Heather moorland persisted throughout the profile. There is nothing to differentiate this record from that of the upper ditch, and it is likely that both formed during the same, or very similar, time period.

6.8 The results from these profiles are very similar to those of a preliminary pollen assessment undertaken by Dr Jim Innes on a sample of the thin black humic layer in the upper ditch section, collected during an initial site visit. As above, *Calluna* made up approximately 90% of the pollen count, with lower values of Poaceae, *Corylus* and herbaceous species recorded. Radiocarbon analysis of this sample produced a late medieval date (550-495 cal BP).

Discussion

6.9 The almost complete *Calluna* pollen dominance in sediments dated to the medieval period after *c*. 1000AD suggests closed heath vegetation of the kind seen in many modern uplands of northern England. The pollen record for this time from elsewhere in upland North Yorkshire, such as above Nidderdale (Tinsley 1975), however, suggests a more agricultural, grass-dominated environment due to intensive grazing, with only moderate heather frequencies. It may be that the Harker Hill pollen data reflect very local heather dominance and do not represent the wider landscape. Pollen evidence from peat bog sites on these more northerly moorlands above Swaledale, however, agrees with a major upland cover of ericaceous plants at this time (Gear & Turner 2001). Innes (2001) recorded a *Calluna*-dominated pollen assemblage, with frequencies of over 80% heather, from medieval ditch-fill profiles on Ravock Moor, above Stainmore, and concluded that fully-established heather moor covered the area surrounding the site, which had radiocarbon dates of medieval age closely analogous to those from Harker Hill. The evidence from Harker Hill appears to be an acceptable record of the upland vegetation in this part of North Yorkshire during the 11th to 15th centuries AD.

Radiocarbon dating

6.10 The small charcoal fragments from context [2] and [3], and a bulk sediment sample from context [11], were sent for AMS radiocarbon dating at the Scottish Universities Environmental Research Centre, East Kilbride (SUERC). A summary of the results is presented in Appendix 1 Table 1.3. The fragment of willow/poplar charcoal from context [3], the silty clay layer at the base of the upper ditch section, provided a date of 897-1025 cal AD. The oak charcoal from context [2], the black humic layer above context [3], provided a date of 3080-2904 cal BC. The bulk sediment sample from context [11], the black humic layer in the lower ditch section, provided a date of 880-990 cal AD.

Palaeoenvironmental conclusions

6.11 Pollen analysis of the ditch profiles indicates that heather moorland persisted at the site. Macrofossil remains of heather were noted in all but one of the bulk samples. The indication of open heathland vegetation with limited tree cover supports the early and late medieval radiocarbon dates obtained from the ditch sections. The open landscape recorded within the black humic layer, coupled with the medieval dates obtained for this layer, suggests that the small isolated fragment of oak charcoal which provided a Neolithic date represents in-washed material, probably deriving from upslope blanket peat. Although the date from context [3] was also from a fragment of isolated charcoal, the similarity of the results with context [11] supports the validity of the date. The similarity of the pollen records within the upper and lower ditch sections suggests that both formed during the same, or very similar, relatively recent time period.

7. Conclusions

7.1 Detailed profiles were recorded for each ditch, with the upcast bank identified with reasonable certainty to the south. No artefacts were recovered. Palaeoenvironmental samples were taken from the fills of both ditches. Analysis of these, together with radiocarbon dating, suggests a pre-conquest context for the construction of the earthworks, as this is the date of the earlier silts, with the remainder of the ditches probably silting up during the 11th-15th centuries AD in an environment dominated by open heathland vegetation. This project has addressed the need for further radiocarbon-dated pollen data in order to more fully understand the wider environmental context in which early and later medieval upland activity took place, as highlighted in the regional research agenda for North East England (Petts & Gerrard 2006).

8. Sources

Evans, A T, & Moore, P D, 1985 Surface pollen studies of *Calluna vulgaris* (L.) Hull and their relevance to the interpretation of bog and moorland pollen diagrams. *Circaea* **3**, 173-178

Fleming, A, 1998 *Swaledale, Valley of the Wild River*. Edinburgh University Press

Gear, A, & Turner, J, 2001 Palynological evidence for changing patterns of land use, in B E Vyner (ed) *Stainmore: the Archaeology of a North Pennine Pass*, 24–34. Tees Archaeology Monograph Series 1, Hartlepool

Hather, J G, 2000 *The identification of the Northern European Woods: a guide for archaeologists and conservators*. London

Innes, J B, 2001 The results of pollen analyses from Ravock Moor, in B E Vyner (ed) *Stainmore: the Archaeology of a North Pennine Pass*, 41–47. Tees Archaeology Monograph Series 1, Hartlepool

Laurie, T C, 1985 Early land division and settlement in Swaledale and on the eastern approaches to the Stainmore Pass over the North Pennines, in Spratt, D, and Burgess, C, 1985 *Upland Settlement in Britain*. BAR British Series 143

Moore, P D, Webb, J A, & Collinson, M E, 1991 *Pollen Analysis*. Oxford

Petts, D, & Gerrard, C, 2006 *Shared Visions: The North-East Regional Research Framework for the Historic environment*. Durham

Preston, C D, Pearman, D A, & Dines, T D, 2002 *New Atlas of the British and Irish Flora.* Oxford

Raistrick, A, 1968 *The Pennine Dales*. London, Eyre and Spottiswoode

Schweingruber, F H, 1990 *Microscopic wood anatomy*. Birmensdorf

Stace, C, 1997 *New Flora of the British Isles*. Cambridge

Tinsley, H M, 1975 The vegetation of upper Nidderdale: Man's impact in the post-Roman period, in A D M Phillips & B J Turton (eds) *Environment, Man and Economic Change*, 146-163. London

Appendix 1: Data tables

Table 1.1: Context data

No	Area	Description
1	S#4	Main (laminated) fill of upper ditch [F26]
2	S#4	Thin black fill layer
3	S#4	Clay and silt lower fill of [F26]
4	S#1	Topsoil and turf S#1
5	S#1	Dark layer – probable buried turf
6	S#1	Fill of [F7]
F7	S#1	Recut of ditch [F16]
8	S#1	Fill of [F9]
F9	S#1	Recut of ditch [F16]
10	S#1	Main (laminated) fill in lower ditch [F16]
11	S#1	Thin black fill layer
12	S#1	Clay and silt fill
13	S#1	Black organic-rich fill layer
14	S#1	Base fill of [F16]
15	S#1	Natural S#1
F16	S#1	Cut of lower ditch
17	S#3	Topsoil and turf S#3
F18	S#3	Probable remains of upcast bank
19	S#3	Hillwash deposit (possible redeposited upcast)
20	S#3	Natural S#3
21	S#3	Upper fill of ditch
F22	S#3	Ditch cut (equivalent to [F26]
23	S#4	Topsoil and turf S#4
24	S#4	Hillwash deposit
25	S#4	Dark layer – probable buried turf
F26	S#4	Cut of upper ditch
27	S#4	Fill of 'anklebreaker' – primary fill of [F26]
28	S#4	Natural S#4
29	S#1	Soil buildup overlying [5] – probable hillwash
30	S#1	Possible remains of lower upcast bank
31	S#1	Subsoil / reworked natural

Table 1.2: Data from palaeoenvironmental assessment

Sample	**1**	**2**	**3**	**4**	**6**	**11**	**12**
Context	**1**	**3**	**2**	**27**	**18**	**10**	**11+12**
Feature	**ditch**	**ditch**	**layer**	**ditch**	**bank**	**ditch**	**layer**
Material available for radiocarbon dating	-	(✓)	(✓)	-	-	-	-
Volume processed (l)	32	41	28	4	9	19	18
Volume of flot (ml)	500	250	2000	6	400	200	100
Flot matrix							
Charcoal	+	+	+	-	-	-	-
Earthworm egg case	-	-	-	-	-	-	-
Heather flower heads (charred)	+	++	++	-	-	-	-
Heather twigs (charred)	++	+++	++++	+	-	++	++
Humified organic material	-	-	+++	-	-	-	-
Insect / beetle	+	-	+	-	-	-	-
Puparia	-	-	+	-	-	-	-
Roots (modern)	+++	++	+	-	+++	++	++
Charred remains (total count)							
(w) *Carex* sp (Sedges) trigonous nutlet	-	2	-	-	-	-	-

[w-wet/damp ground. (+): trace; +: rare; ++: occasional; +++: common; ++++: abundant
(✓) there may be insufficient weight of carbon available for radiocarbon dating]

Table 1.3: Summary and results of AMS radiocarbon dating

Lab code	Context	Sample	Material	Weight	Radiocarbon age	$\delta^{13}C$ relative to VPDB	95.4% (2σ) cal age range
Wk-25556	-	HHH	Bulk charred material	-	490 ± 31 BP	-27.3 ‰	550 (95.4%) 495 cal BP
SUERC-44494 (GU29480)	3	2	Willow/poplar charcoal	22mg	1055 ± 29 BP	-27.4 ‰	897 (12.8%) 921 cal AD 943 (82.6%) 1025 cal AD
SUERC-44495 (GU29481)	2	3	Oak charcoal	20mg	4354 ± 27 BP	-27.3 ‰	3080 (2.4%) 3070 cal BC 3025 (93.0%) 2904 cal BC
SUERC-47701 (GU31074)	11	9	Bulk sediment	2500mg	1119 ± 25 BP	-27.7 ‰	880 (95.4%) 990 cal AD

Appendix 2: Stratigraphic matrices

Section 1

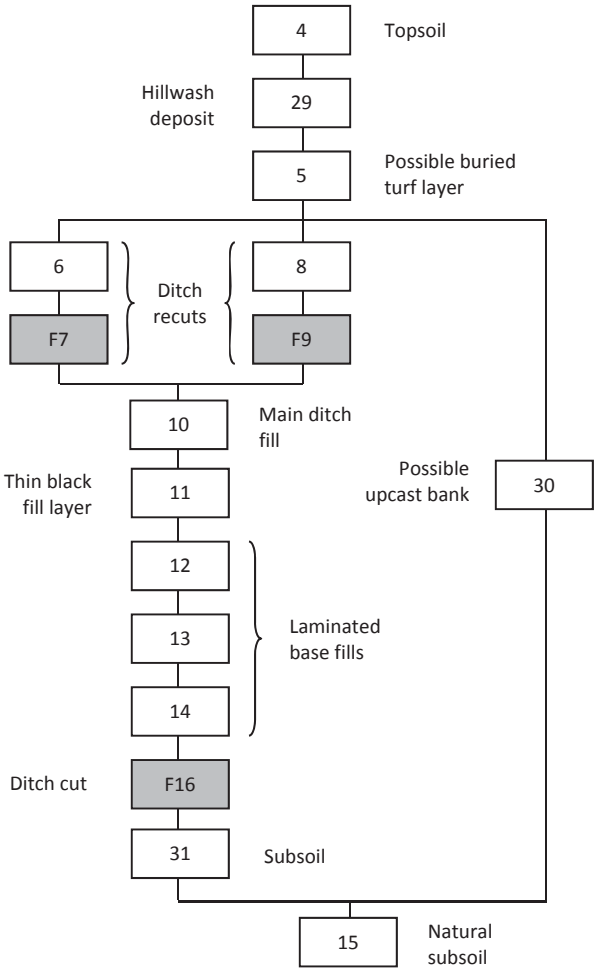

Section 3

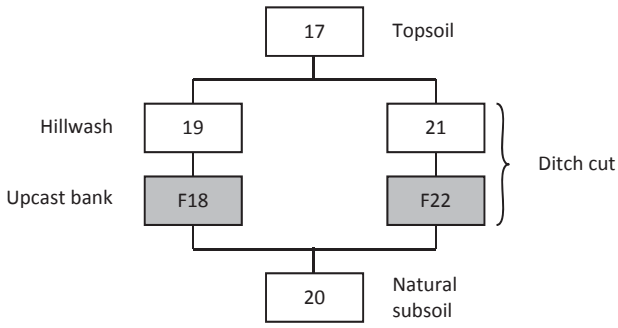

Section 4

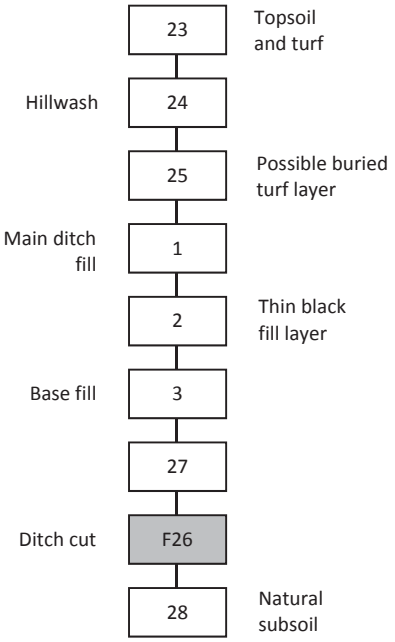
23
Topsoil and turf
Hillwash
24
25
Possible buried turf layer
Main ditch fill
1
2
Thin black fill layer
Base fill
3
27
Ditch cut
F26
28
Natural subsoil

Appendix 3: Radiocarbon certificates

Scottish Universities Environmental Research Centre

Director: Professor R M Ellam

Rankine Avenue, Scottish Enterprise Technology Park,
East Kilbride, Glasgow G75 0QF, Scotland, UK
Tel: +44 (0)1355 223332 Fax: +44 (0)1355 229898 www.glasgow.ac.uk/suerc

RADIOCARBON DATING CERTIFICATE
19 February 2013

Laboratory Code	SUERC-44494 (GU29480)
Submitter	Charlotte O'Brien Archaeological Services Durham University South Road Durham DH1 3LE
Site Reference	Harker Hill Swaledale, North Yorkshire
Context Reference	3
Sample Reference	2
Material	Charcoal : Willow/poplar
δ^{13}C relative to VPDB	-27.4 ‰
Radiocarbon Age BP	1055 ± 29

N.B.
The above ^{14}C age is quoted in conventional years BP (before 1950 AD). The error, which is expressed at the one sigma level of confidence, includes components from the counting statistics on the sample, modern reference standards, background standards and the random machine error.

The calibrated age ranges are determined using the University of Oxford Radiocarbon Accelerator Unit calibration program OxCal 4.1 (Bronk Ramsey 2009). Terrestrial samples are calibrated using the IntCal09 curve while marine samples are calibrated using the Marine09 curve.

Samples with a SUERC coding are measured at the Scottish Universities Environmental Research Centre AMS Facility and should be quoted as such in any reports within the scientific literature. Any questions directed to the Radiocarbon Laboratory should also quote the GU coding given in parentheses after the SUERC code. The contact details for the laboratory are email g.cook@suerc.gla.ac.uk or Telephone 01355 270136 direct line.

Conventional age and calibration age ranges calculated by :- Date :-

Checked and signed off by :- Date :-

Calibration plot

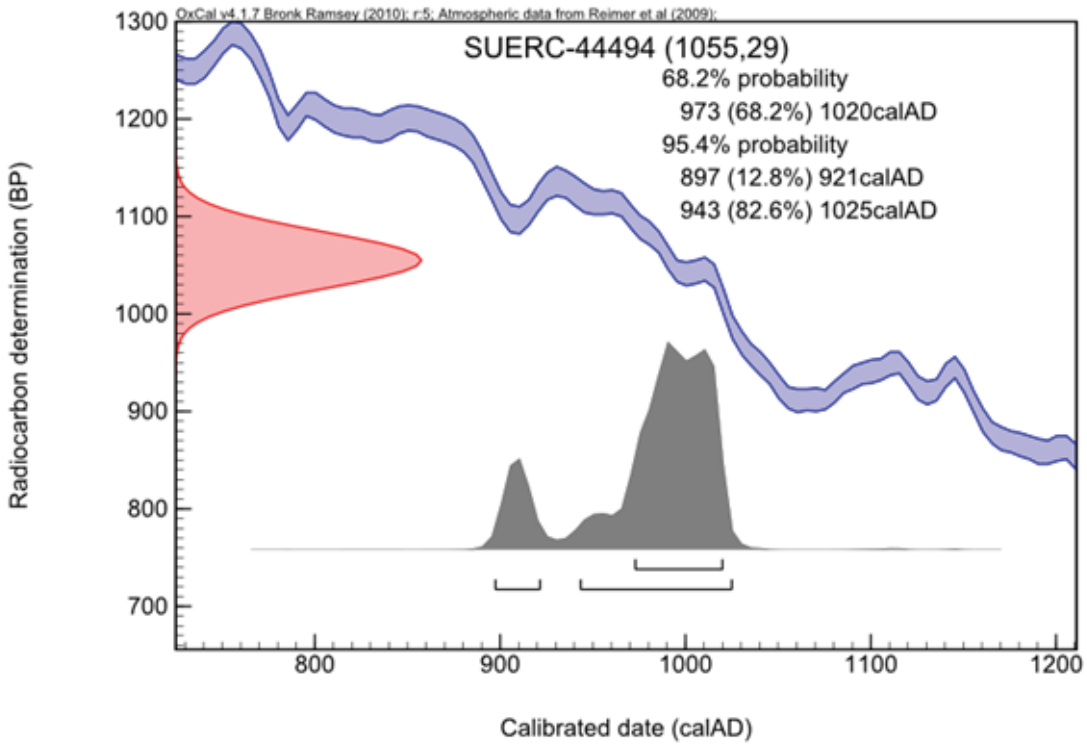

Scottish Universities Environmental Research Centre

Director: Professor R M Ellam

Rankine Avenue, Scottish Enterprise Technology Park,
East Kilbride, Glasgow G75 0QF, Scotland, UK
Tel: +44 (0)1355 223332 Fax: +44 (0)1355 229898
www.glasgow.ac.uk/suerc

RADIOCARBON DATING CERTIFICATE

19 February 2013

Laboratory Code	SUERC-44495 (GU29481)
Submitter	Charlotte O'Brien Archaeological Services Durham University South Road Durham DH1 3LE
Site Reference	Harker Hill Swaledale, North Yorkshire
Context Reference	2
Sample Reference	3
Material	Charcoal : Oak
$\delta^{13}C$ relative to VPDB	-27.3 ‰
Radiocarbon Age BP	4354 ± 27

N.B.
The above ^{14}C age is quoted in conventional years BP (before 1950 AD). The error, which is expressed at the one sigma level of confidence, includes components from the counting statistics on the sample, modern reference standards, background standards and the random machine error.

The calibrated age ranges are determined using the University of Oxford Radiocarbon Accelerator Unit calibration program OxCal 4.1 (Bronk Ramsey 2009). Terrestrial samples are calibrated using the IntCal09 curve while marine samples are calibrated using the Marine09 curve.

Samples with a SUERC coding are measured at the Scottish Universities Environmental Research Centre AMS Facility and should be quoted as such in any reports within the scientific literature. Any questions directed to the Radiocarbon Laboratory should also quote the GU coding given in parentheses after the SUERC code. The contact details for the laboratory are email g.cook@suerc.gla.ac.uk or Telephone 01355 270136 direct line.

Conventional age and calibration age ranges calculated by :- Date :-

Checked and signed off by :- Date :-

Calibration plot

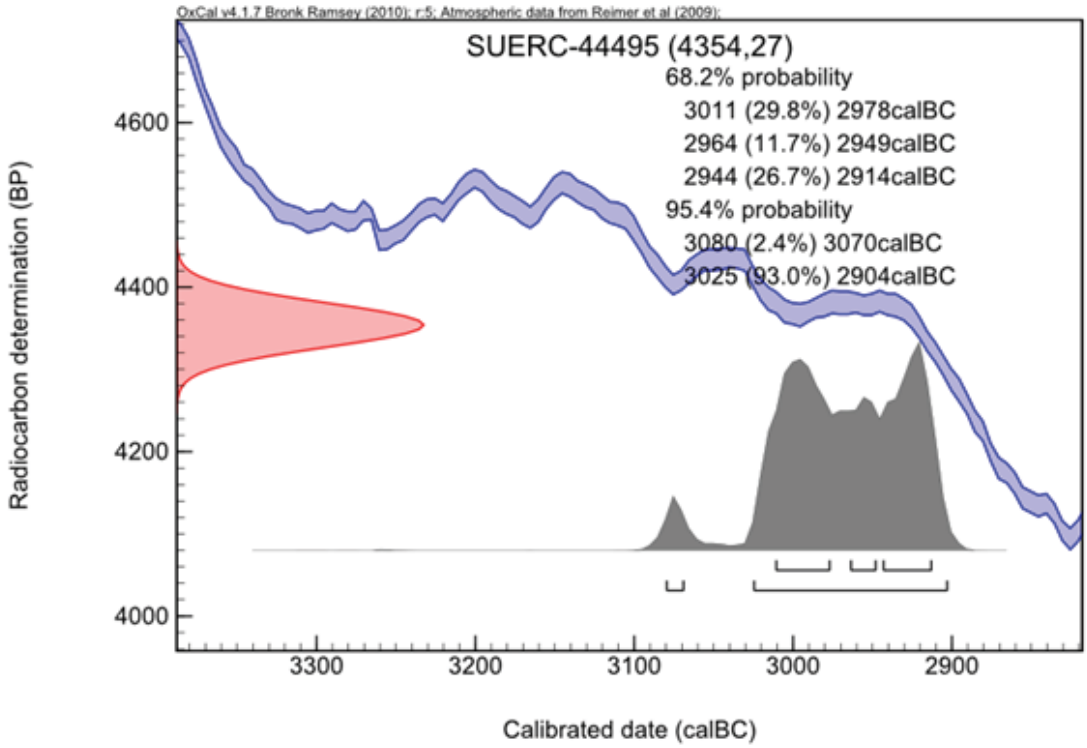

The University of Waikato

Radiocarbon Dating Laboratory

Private Bag 3105
Hamilton,
New Zealand.
Fax +64 7 838 4192
Ph +64 7 838 4278
email c14@waikato.ac.nz
Head: Dr Alan Hogg

Report on Radiocarbon Age Determination for Wk- 25556

(AMS measurement)

Submitter	J B Innes
Submitter's Code	HHH
Site & Location	High Harker Hill, Swaledale, North Yorkshire, United Kingdom
Sample Material	Black silty organic material
Physical Pretreatment	Visible contaminants removed.
Chemical Pretreatment	Sample washed in hot HCl, rinsed and treated with multiple hot NaOH washes. The NaOH insoluble fraction was treated with hot HCl, filtered, rinsed and dried.

$\delta^{13}C$	-27.3 ± 0.2	‰
$D^{14}C$	-59.2 ± 1.9	‰
$F^{14}C\%$	94.1 ± 0.2	%
Result	**490 ± 31 BP**	

Comments

AGHogg
24/6/09

- Result is *Conventional Age or % Modern* as per Stuiver and Polach, 1977, Radiocarbon 19, 355-363. This is based on the Libby half-life of 5568 yr with correction for isotopic fractionation applied. This age is normally quoted in publications and must include the appropriate error term and Wk number.
- Quoted errors are 1 standard deviation due to counting statistics multiplied by an experimentally determined Laboratory Error Multiplier.
- The isotopic fractionation, $\delta^{13}C$, is expressed as ‰ wrt PDB.
- $F^{14}C\%$ is also known as pMC (percent modern carbon).

Scottish Universities Environmental Research Centre
Director: Professor R M Ellam
Rankine Avenue, Scottish Enterprise Technology Park,
East Kilbride, Glasgow G75 0QF, Scotland, UK

RADIOCARBON DATING CERTIFICATE

09 September 2013

Laboratory Code	SUERC-47701 (GU31074)
Submitter	Charlotte O'Brien Archaeological Services Durham University South Road Durham DH1 3LE
Site Reference	Harker Hill Swaledale, North Yorkshire
Context Reference	11
Sample Reference	9
Material	Bulk sediment : N/A
$\delta^{13}C$ relative to VPDB	-27.7 ‰
Radiocarbon Age BP	1119 ± 25

N.B. The above ^{14}C age is quoted in conventional years BP (before 1950 AD). The error, which is expressed at the one sigma level of confidence, includes components from the counting statistics on the sample, modern reference standard and blank and the random machine error.

The calibrated age ranges are determined from the University of Oxford Radiocarbon Accelerator Unit calibration program (OxCal4).

Samples with a SUERC coding are measured at the Scottish Universities Environmental Research Centre AMS Facility and should be quoted as such in any reports within the scientific literature. Any questions directed to the Radiocarbon Laboratory should also quote the GU coding given in parentheses after the SUERC code. The contact details for the laboratory are email g.cook@suerc.gla.ac.uk or telephone 01355 270136 direct line.

Conventional age and calibration age ranges calculated Date :-

Checked and signed off by Date :-

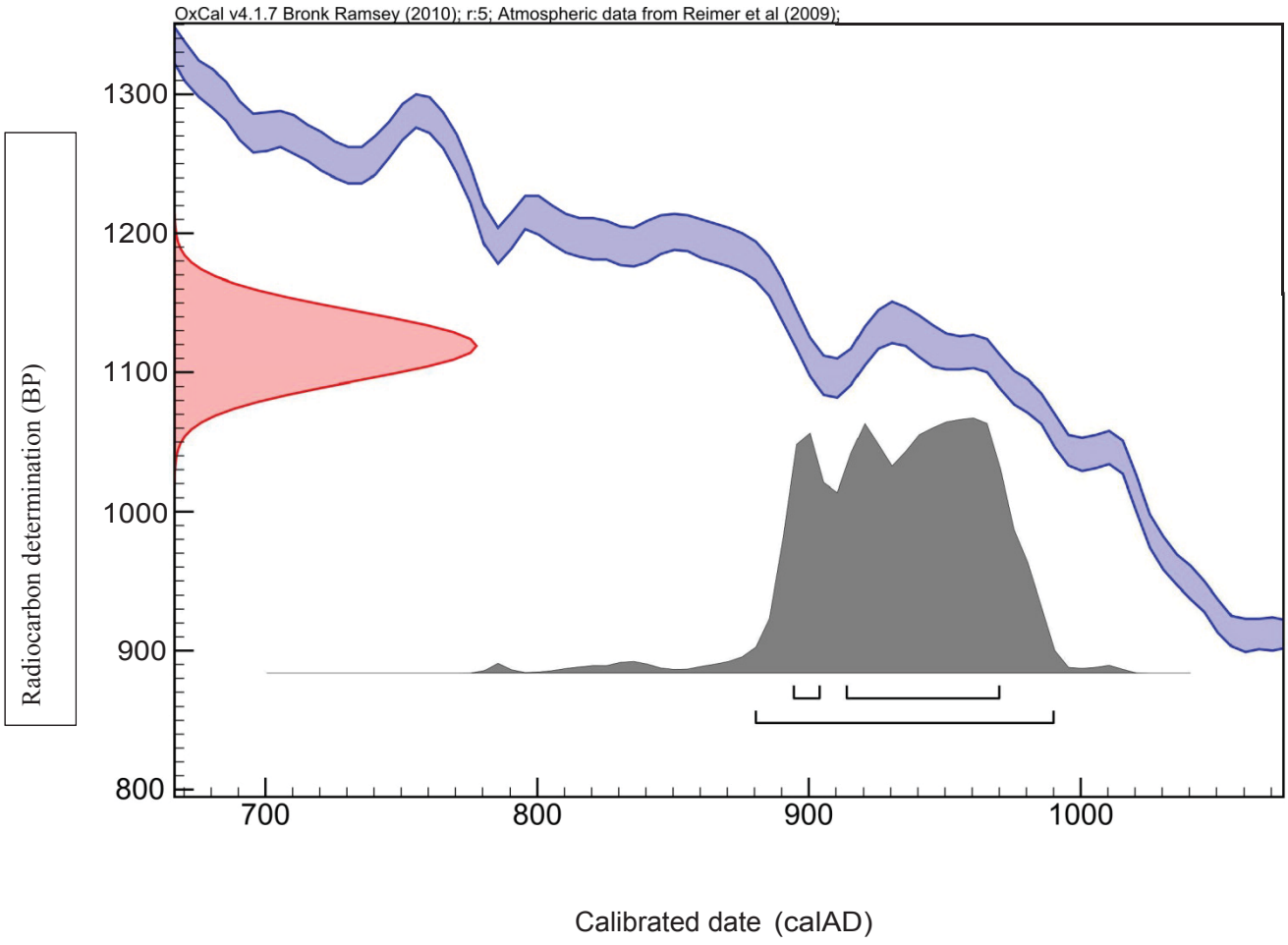
OxCal v4.1.7 Bronk Ramsey (2010); r:5; Atmospheric data from Reimer et al (2009);
Radiocarbon determination (BP)
1300
1200
1100
1000
900
800
700
800
900
1000
Calibrated date (calAD)

ARCHAEOLOGICAL SERVICES
DURHAM UNIVERSITY

on behalf of
Swaledale and Arkengarthdale Archaeology Group

High Harker Hill
Richmondshire
North Yorkshire

archaeological excavation
report 3032

Figure 1: Site location

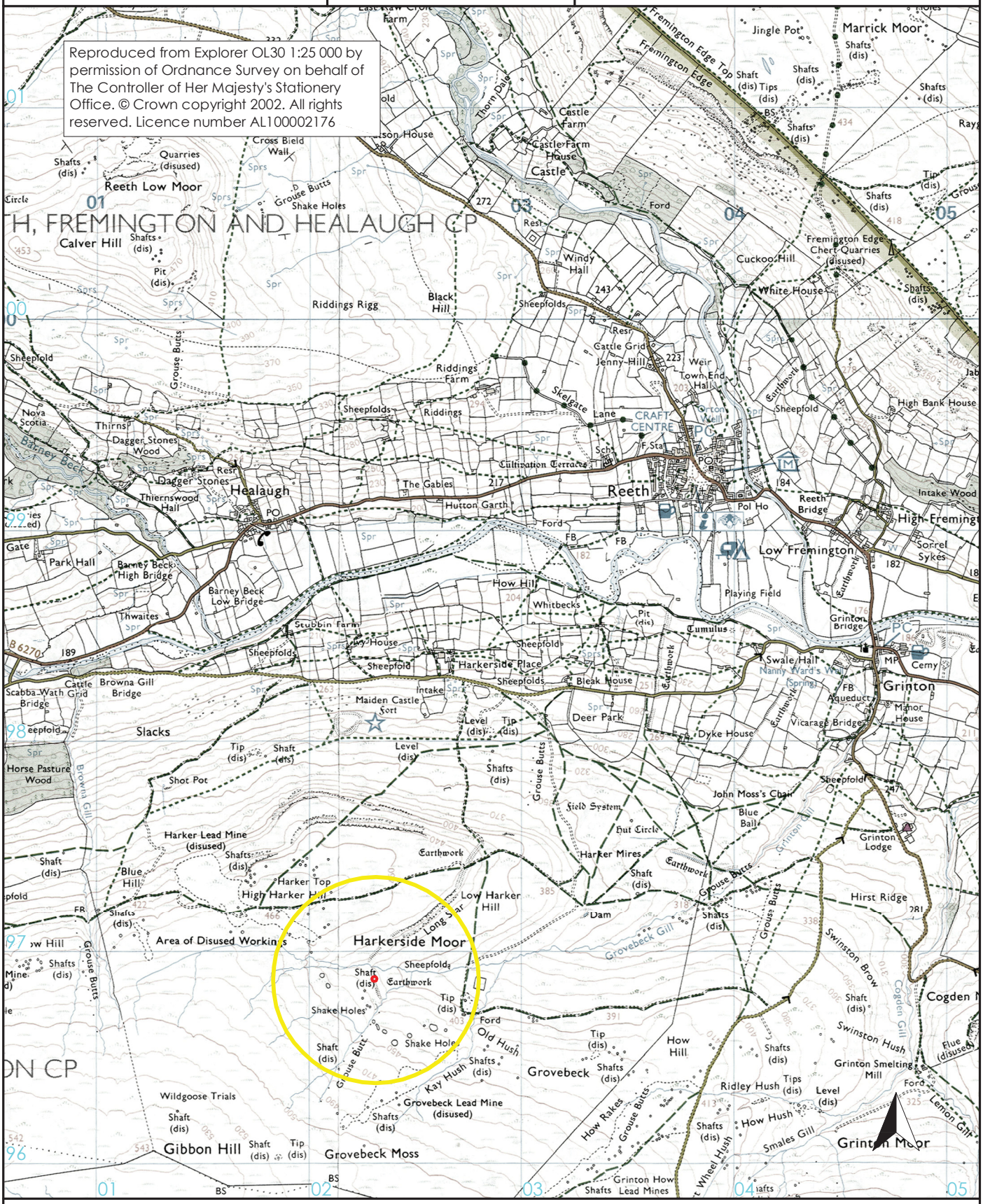

site location

0 1km
scale 1:25 000 for A4 plot

ARCHAEOLOGICAL SERVICES
DURHAM UNIVERSITY

on behalf of
Swaledale and Arkengarthdale Archaeology Group

High Harker Hill
Richmondshire
North Yorkshire

archaeological excavation
report 3032

Figure 2: Trench location

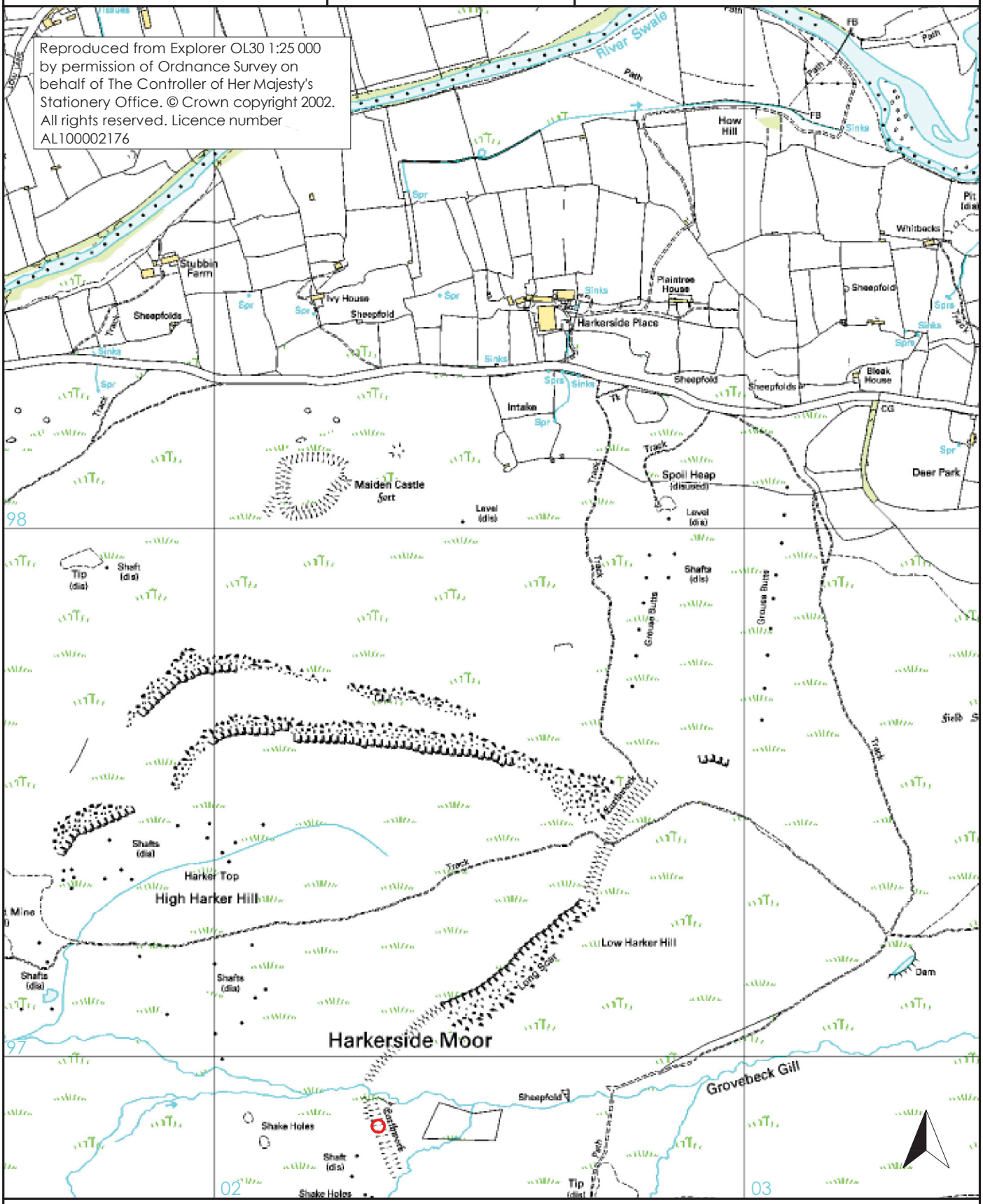

trench location

0 500m
scale 1:10 000 for A4 plot

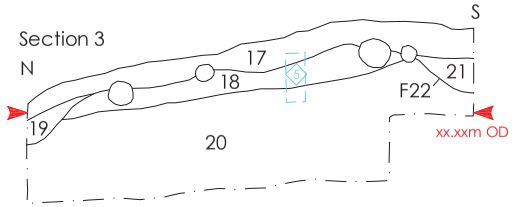

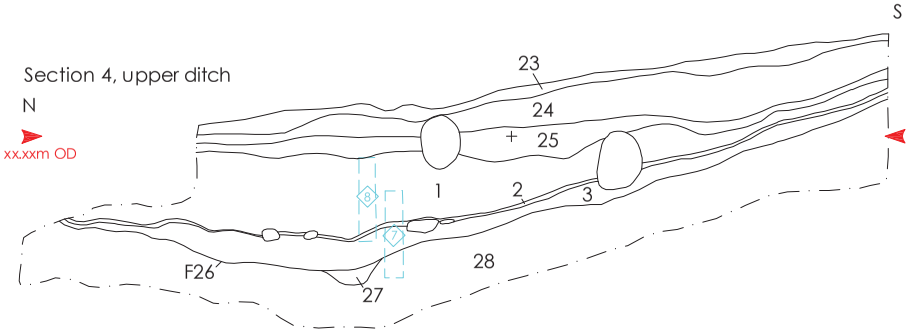

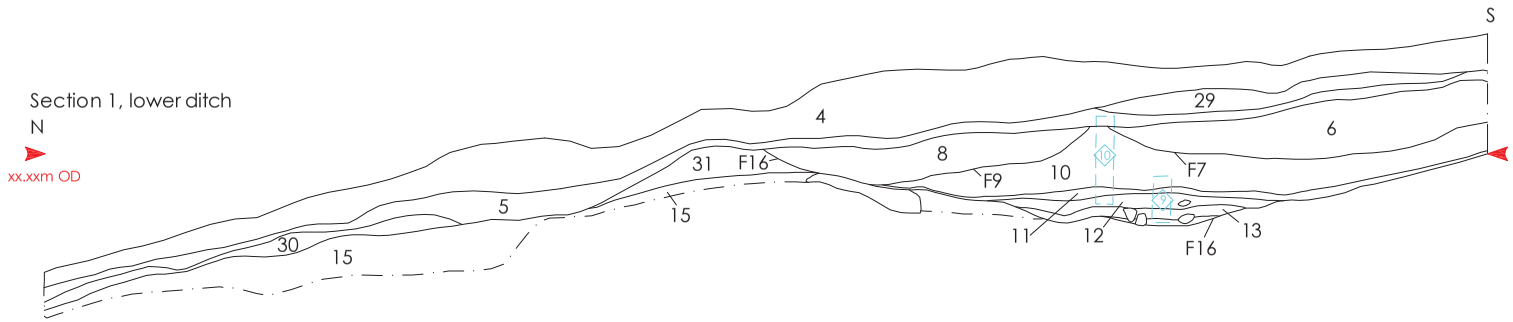

ARCHAEOLOGICAL SERVICES
DURHAM UNIVERSITY

on behalf of
Swaledale and Arkengarthdale Archaeology Group

High Harker Hill
Richmondshire
North Yorkshire

archaeological excavation
report 3032

Figure 3: Sections

0 1.5m
scale 1:30 for A3 plot

extent of excavation

environmental sample

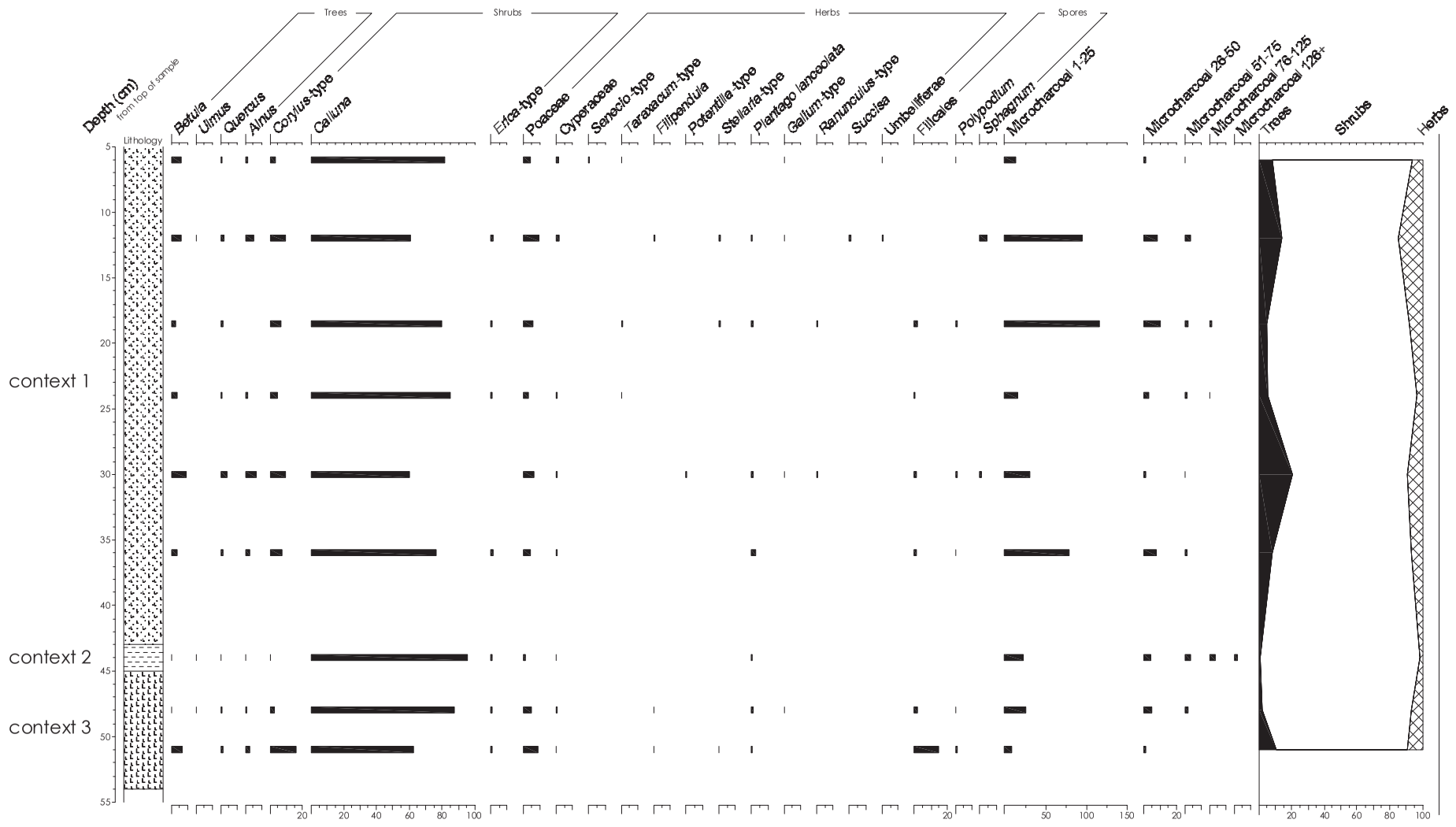

ARCHAEOLOGICAL SERVICES
DURHAM UNIVERSITY

on behalf of
Swaledale and Arkengarthdale Archaeology Group

High Harker Hill
Richmondshire
North Yorkshire

archaeological excavation
report 3032

Figure 4: Upper ditch pollen diagram

sandy silt
silty clay
humic layer

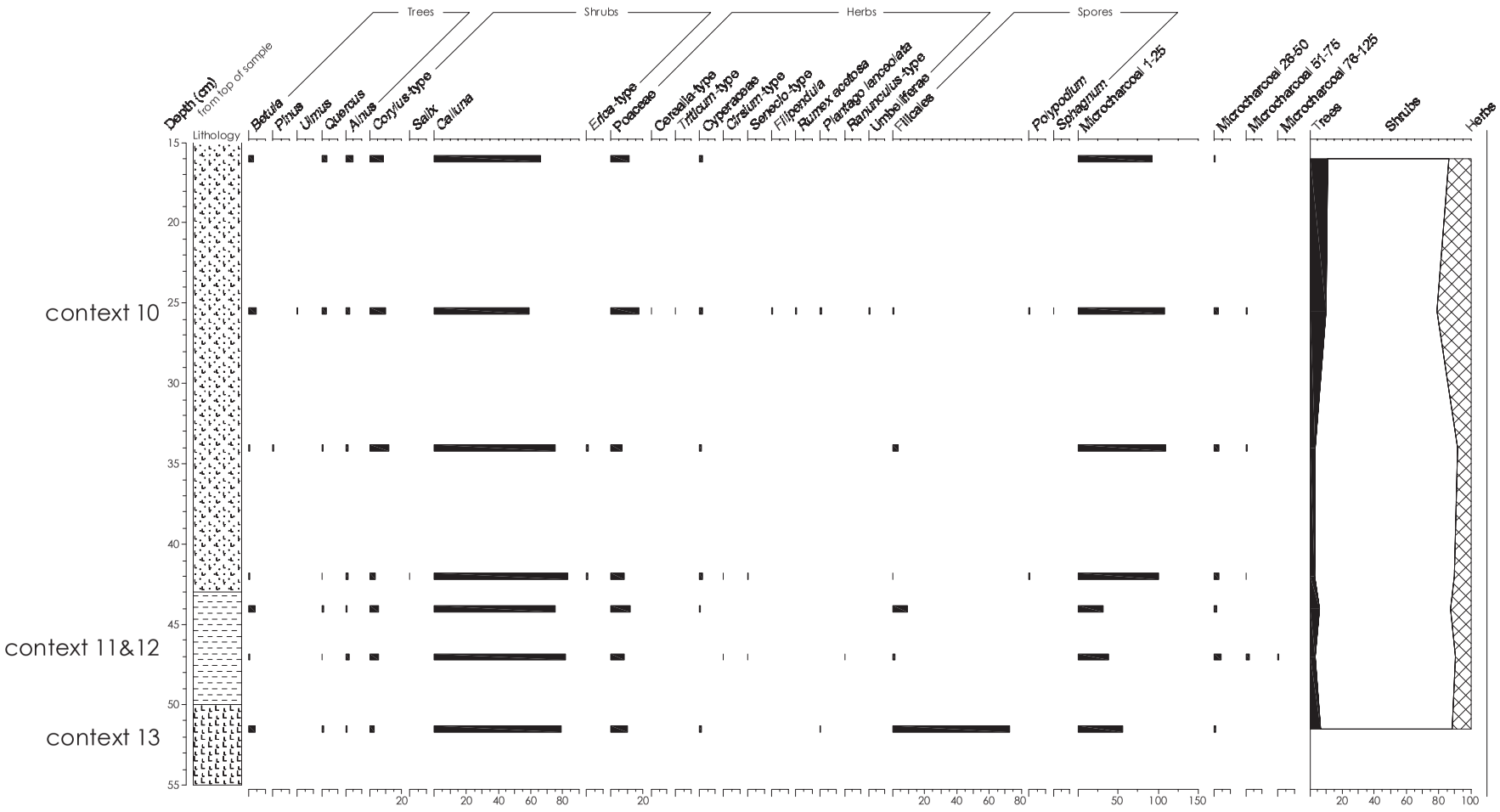

ARCHAEOLOGICAL SERVICES
DURHAM UNIVERSITY

on behalf of
Swaledale and Arkengarthdale Archaeology Group

High Harker Hill
Richmondshire
North Yorkshire

archaeological excavation
report 3032

Figure 5: Lower ditch pollen diagram

sandy silt
silty clay
humic layer

Figure 6: The dyke system, looking east across High Harker Hill from the dig site. The lower (northern) ditch runs through the centre of the frame (indicated), with the upcast bank of the southern ditch visible to the right

Figure 7: The southern ditch section, looking east. Disturbance from rabbit burrowing is evident in the centre of the section

Figure 8: Section 3, showing the remains of the southern upcast bank, looking east

Figure 9: The northern ditch, with the two recuts indicated, looking east