AN ARCHAEOLOGICAL WATCHING BRIEF MAINTAINED ON THE EXCAVATION OF A NEW SERVICE TRENCH AT ALL SAINTS CHURCH, ALL SAINTS STREET, HASTINGS, EAST SUSSEX.

N. G. R. TQ 82820 09880

Project Number 09 / 11

November 2009

Christopher Greatorex BA, MIFA and Annalie Seaman

2 OTTEHAM CLOSE, POLEGATE, EAST SUSSEX BN26 5AZ

TEL: 01323 488852 EMAIL: christopher.greatorex@mypostoffice.co.uk

CONTENTS.

LIST OF ILLUSTRATIONS.

ABSTRACT.

An archaeological watching brief was maintained on the excavation of a new service trench (drainage and gas) across the cemetery of All Saints Church, All Saints Street, Hastings.

No significant fresh information concerning the origin or early history of All Saints Church and / or its immediate locale was discovered during the fieldwork. Nevertheless, a human skull exposed within the new service trench is believed to represent the remains of an in-situ adult inhumation. No archaeological excavation of this undated interment was required. A small assemblage of disarticulated / displaced human bone indicative of earlier graveyard disturbance was also recovered from the deposits stripped from the route of the trench.

As a result of the watching brief, the footings of the church's early 15th century north aisle were demonstrated to be of sandstone and flint construction. The sandstone and brick footings of the 19th century vestry were also recorded.

A significant quantity of 19th century tile and brick was noted during the project. It would seem likely that at least some of this material was derived from the later 19th century demolition of four buildings once located at the north – west corner of the cemetery.

1.0. INTRODUCTION.

1.1. This document presents the results of an archaeological watching brief maintained on the excavation of a new service trench (drainage and gas) within the cemetery of All Saints Church, All Saints Street, Hastings, East Sussex (N. G. R. TQ 82820 09880) (figures 1, 2 and 3).

1.2. In December 2008, the potential impact of the proposed service trench was considered as part of an archaeological desk – based assessment of All Saints Church carried – out by C. G. Archaeology (Dunkin and Greatorex 2008). As a result of this study it was concluded that any groundworks undertaken within the church cemetery may expose *in-situ* human remains, funerary monuments, layers, cut features, structures and artefacts of archaeological significance.

1.3. C. G. Archaeology was thus commissioned by Peter Pritchett of John D Clarke and Partners (Chartered Architects) on behalf of All Saints, Hastings PCC to maintain a constant archaeological watching brief on the excavation of the new service trench.

1.4. The archaeological watching brief followed the advice given by the Diocesan Advisory Committee for the Care of Churches (DAC) namely that:

No development shall take place until the applicant has secured the implementation of a programme of archaeological works in accordance with a Written Scheme of Investigation (WSI) submitted to and approved by the Diocesan Archaeological Advisor and all works shall be carried – out in accordance with the WSI.

1.5. The archaeological methodology employed during the project (see Section 5.0.) was based upon a targeted Written Scheme of Investigation prepared by Christopher Greatorex of C. G. Archaeology and agreed with Casper Johnson the East Sussex County Council Archaeologist and Vivienne Coad the

Archaeological Advisor to the Diocesan Advisory Committee for the Care of Churches (DAC). A faculty authorising the intended works was granted by the Consistory Court of the Diocese of Chichester.

1.6. The archaeological fieldwork was carried – out by Annalie Seaman and Christopher Greatorex of C. G. Archaeology between the 15th and 24th September 2009.

2.0. TOPOGRAPHICAL AND GEOLOGICAL BACKGROUND.

2.1. All Saints Church is located on the north-west facing side of the Bourne Valley at the north-eastern end of the old Medieval core of Hastings. The location is close to the contact of the 'natural' Wadhurst Clay and Ashdown Sand deposits. These formations of the Hastings Beds comprise part of a former Wealden lake and its delta(s) and are dated to the Cretaceous period (Gallois 1965).

2.2. The church is terraced into the side of the valley and surrounded by the sloping churchyard.

3.0. HISTORICAL AND ARCHAEOLOGICAL BACKGROUND.

3.1. The origin, development and historical / archaeological context of All Saints Church is described within the archaeological desk – based assessment previously prepared by C. G. Archaeology (Dunkin and Greatorex 2008) (see Section 1.2.) and need not be reviewed here. However, a short architectural summary of the current church is presented below.

3.2. All Saints Church is a Grade I Listed Building. The raised chancel, nave with aisles, south porch and tower all date from the early 15th century. The entrance is through the west door into the tower. 'This is stone vaulted, the ribs springing from corbels with grotesque heads; a circular opening for the bell ropes is carved with animals. The nave is of four bays with octagonal pillars and capitals; above the chancel arch is a 15th century Doom painting with Christ seated on two rainbows' (Whiteman and Whiteman 1994). The rood loft stairs can be seen within the east buttress of the south aisle, while the 'chancel has a piscina and triple sedilia with four – centred arches under a flat hoodmould' (*ibid*). The vestry and organ chamber are 'modern'.

3.3. In 1896, a survey of All Saints Church cemetery (Bax 1896) confirmed that all of the observed gravestones were then dated to the 18th or 19th centuries, with the earliest recorded date being 1716 (Ann Stevenson).

4.0. PROJECT OBJECTIVES.

4.1. The approved Written Scheme of Investigation for the project (see Section 1.5.) defined the primary objectives of the archaeological fieldwork as follows.

- Confirm the stratigraphic formation of the cemetery.

- Ensure that all funerary remains and other deposits, cut features, structures, artefacts and ecofacts exposed during the watching brief are investigated, recorded, sampled and interpreted to an acceptable standard.

- Ensure that all *in-situ* human remains discovered during the watching brief are exposed, cleaned, recorded and lifted in accordance with defined professional standards.

- Determine the extent, character, condition and date of any other revealed archaeologically significant deposits, cut features and structures.

- Establish the palaeoenvironmental potential of located archaeologically significant deposits and cut features.

- Assess the impact of modern activity on any located funerary remains, and other deposits, cut features and structures of archaeological significance discovered during the watching brief.

- Provide information on which to base future decisions concerning the treatment of any archaeologically significant deposits, cut features and structures found during the watching brief.

5.0. INVESTIGATIVE METHODOLOGY.

5.1. Background research.

5.1.1. An examination of the East Sussex County Council Historical Environment Record and historic maps held at the East Sussex Record Office, Lewes was carried – out as part of the desk – based assessment previously prepared by C. G. Archaeology (Dunkin and Greatorex 2008) (see Section 1.2.). Relevant published papers concerning the history and archaeological context of All Saints Church and the surrounding settlement were also consulted during this preliminary study.

5.2. Fieldwork.

5.2.1. The trench shown on figures 2 and 3 was excavated by the authorised groundworks contractors (Darren Bird Construction Ltd.) under the constant supervision of C. G. Archaeology. Even spits were removed from the cutting by hand until the depth required by the groundworks contractor (between c.0.35m. and 1.20m. below original ground level: see Figure 3) or the top of the seemingly *in-situ* human skull described in Section 6.4. had been reached. The monitored groundworks did not impact upon any standing headstones or other visible funerary monuments.

5.2.2. Each archaeological context revealed during the fieldwork was investigated manually in order to assess its archaeological / palaeoenvironmental potential and then documented on an individual Context Record Sheet.

5.2.3. A groundworks location plan was prepared at a scale of 1: 250 and a full photographic record of the project maintained as appropriate.

5.2.4. The footings of the north aisle and vestry exposed by the monitored groundworks were drawn in section / elevation at a scale of 1:10. The

footings of the cemetery boundary wall (north – west corner of graveyard) were also recorded in sketch form.

5.2.5. An unmarked human skull exposed within the new service trench was investigated by hand, documented on a Skeleton Record Sheet, planned at a scale of 1: 10, plotted on the main 1: 250 scale groundworks location plan (see Section 5.2.3.) and preserved *in-situ* (see Section 6.4.).

5.2.6. A small collection of disarticulated / displaced human bone recovered from the excavated trench deposits was bagged and boxed for subsequent re-interment within the church cemetery. It should be noted that none of the human bones discovered during the project were subject to quantification or specialist osteological analysis.

6.0. RESULTS OF FIELDWORK.

6.1. A c.50mm. to 0.20m. – thick layer of fairly loose, mid grey – brown silty clay topsoil **(1)** was stripped from the entire length of the monitored service trench. The topsoil **(1)** removed from the short section of trench that ran parallel to the 19th century church vestry contained c.80% 19th / 20th century tile fragments (source not ascertained). Significantly fewer topsoil inclusions (c.1% 19th / 20th century tile pieces) were recorded along the remainder of the cutting.

6.2. The excavation of Context 1 from the north-western end of the new service trench exposed an immediately underlying dump of 19th century tile and brick fragments **(4)** clearly piled - up against the internal face of the cemetery's boundary wall footings **(5)**. The true character / extent of Context 4 proved impossible to ascertain within the confines of the investigated cutting. Nevertheless, it was observed that the dump **(4)** possessed a maximum thickness of at least c.0.70m. but became gradually thinner towards the south-east, before seemingly petering – out c.4.00m. away from the aforementioned wall footings **(5)**. The source of the numerous broken tiles and bricks that comprised Context 4 remains a matter of conjecture. However, the 1875, 1899, 1909, 1928 and 1938 Ordnance Survey sheets examined as part of the desk – based assessment previously undertaken by C. G. Archaeology (Dunkin and Greatorex 2008) do all document a number of now demolished buildings in close proximity to the monitored trench (see Section 7.5. for further discussion). The cemetery boundary wall footings exposed as a result of the groundworks were built of large, roughly – faced sandstone blocks **(5)**. A representative sketch section / elevation of this wall (probably that shown on the 1839 tithe map for the parish of All Saints Hastings and all subsequent Ordnance Survey sheets of the area: see Dunkin and Greatorex 2008) is held within the Project Archive (see Section 8.0.).

6.3. The complete removal from the service trench of both contexts 1 and 4 revealed an underlying c.0.10m. – 0.15m. – thick layer of compact, light grey – brown silty clay **(2)** across the entire length of the cutting. Context 2 was characterised by the presence of c.60% 19th century tile, sandstone, chalk and flint inclusions (c.10mm. – 0.20m.) perhaps derived (at least in part) from one or more long - since demolished structures once located in the vicinity of the church (also see sections 6.2. and 7.5.).

6.4 Context 2 was itself found to overlie a compact but friable, mid yellow – brown silty clay graveyard soil **(3)** containing c.2% sandstone and chalk inclusions (c.5mm. – 40mm.). During the excavation of Context 3, the top of a single human skull indicative of a probable *in-situ* adult inhumation **(S1)** was exposed at a depth below the original ground surface of c.1.05m. (see Figure 2 for location). It is true that no other bones or signs of any discernible grave cut / fill were found in association with this undated discovery. Nevertheless, two iron nails recorded alongside the cranium are here interpreted tentatively as the only surviving elements of an otherwise decayed wooden coffin. No unnecessary intrusive archaeological investigation of the suggested burial was undertaken by C. G. Archaeology. As a consequence the interred individual's precise age at death, sex and pathology was not ascertained. On completion of the archaeological documentation, a bespoke wooden box was placed over the skull and nails as a protective measure. The new service pipes were then positioned in a way that enabled the described remains to be preserved *in-situ*. A 1: 10 scale plan of the skull is held within the Project Archive (see Section 8.0.).

6.5. A small collection of disarticulated / displaced human bone indicative of earlier graveyard disturbance was also recovered from contexts 1, 2 and 3. This assemblage (not subject to quantification of specialist osteological analysis) will be returned to the church for eventual reburial.

6.6. The footings of the church's early 15th century north aisle exposed during the monitored groundworks were constructed from roughly – faced sandstones

(c.70mm. – 0.49m.) and rarer flint nodules (c.40mm. – 0.14m.) all set within a hard lime mortar **(6)** (Figure 4). The uncovered footings of the 19th century church vestry comprised carefully aligned and closely packed rows of faced sandstone blocks located above at least three courses of brick (size range of individual stones and bricks not apparent within confines of trench) **(7)** (Figure 4).

6.7. No other funerary remains, deposits, cut features, structures, artefacts or ecofacts of archaeological significance were discovered during the watching brief.

Table 1: Context Record Sheet.

CONTEXT NUMBER.	SUMMARY DESCRIPTION / PHYSICAL RELATIONSHIPS.	THICKNESS.
1.	A layer of mid grey – brown silty clay topsoil. Above 2, 4. Abuts 5, 6, 7.	50mm. – 0.20m.
2.	A layer of light grey – brown silty clay. Above 3. Below 1, 4. Abuts 5, 6, 7.	0.10m. – 0.15m.
3.	A layer of mid yellow – brown silty clay graveyard soil. Below 2. Cut by S1? Abuts 5, 6, 7	Full profile not revealed.
4.	A dump of 19th century tile and brick fragments. Above 2. Below 1. Abuts 5.	0.70m. (max. observed).

5.	Sandstone footings of cemetery boundary wall. Abutted by 1, 2, 3, 4.	N / A.
6.	Sandstone and flint footings of north aisle. Abutted by 1, 2, 3.	N / A.
7.	Sandstone and brick footings of vestry. Abutted by 1, 2, 3.	N / A.
S1.	Probable *in-situ* inhumation. Cuts 3?	N / A.

7.0. SUMMARY.

7.1. The archaeological watching brief discussed within this report did not give rise to any significant fresh information concerning the origin or early history of All Saints Church and / or its immediate locale. The monitored groundworks also failed to uncover a single context of palaeoenvironmental interest.

7.2. Nevertheless, a human skull exposed within the new service trench is believed to represent the visible remains of an *in-situ* adult inhumation **(S1)** (see Section 6.4.). No archaeological excavation of this undated interment was required. As a consequence, the buried individual's precise age at death, sex and pathology was not ascertained.

7.3. A small assemblage of disarticulated / displaced human bone indicative of earlier graveyard disturbance was also recovered from the deposits stripped from the route of the service trench (**1, 2, 3)** (see Section 6.5.). The number of individuals represented within this collection, their respective ages at death, sex and pathology has not been established by specialist osteological analysis. Instead, it is intended that these bones will simply be returned to the church for reburial.

7.4. As a result of the watching brief, the footings of the church's early 15th century north aisle were demonstrated to be of sandstone and flint construction. The sandstone and brick footings of the 19th century vestry were also recorded.

7.5. A significant quantity of 19th century tile and brick was noted during the fieldwork **(1, 2, 4)** (see sections 6.1., 6.2. and 6.3.). The source(s) of this material remains a matter of conjecture. However, each of the historic Ordnance Survey sheets examined as part of the desk – based assessment previously undertaken by C. G. Archaeology (Dunkin and Greatorex 2008)

document a number of long – since vanished structures in the immediate vicinity of All Saints Church. Perhaps of greatest relevance are four buildings recorded by the 1875 Ordnance Survey at the south-west corner of the cemetery. These probable dwellings are not shown on the 1839 tithe map for the parish of All Saints, Hasting. Furthermore, by the time of the 1899 Ordnance Survey they had been knocked down to make way for the steps that today lead up from All Saints Street to the church entrance. It would seem likely that at least some of the building rubble found during the watching brief was derived from this later 19th century demolition work.

7.6. The investigative methodology employed by C. G. Archaeology is believed to have satisfied the primary objectives of the fieldwork defined in Section 4.0.

8.0. PROJECT ARCHIVE.

8.1. It is intended that the full paper, digital and photographic records arising from this project will be collated in accordance with *'Guidelines for the preparation of excavation archives for long-term storage'* (UKICI 1990) and deposited in a suitable local museum or similar repository approved by the East Sussex County Council Archaeologist and Archaeological Advisor to the Diocesan Advisory Committee for the Care of Churches (DAC). The small assemblage of disarticulated / displaced human bone recovered from the excavation of the monitored trench will be returned to the church for re-interment.

9.0. ACKNOWLEDGEMENTS.

9.1. C. G. Archaeology would like to thank Casper Johnson and Greg Chuter of East Sussex County Council, Vivienne Coad the Archaeological Advisor to the Diocesan Advisory Committee for the Care of Churches (DAC) Peter Pritchett of John D Clarke and Partners, Darren Bird Construction Ltd., Davis Builders and the church authorities for their assistance during the project. Figures 2 and 3 are based upon a plan drawn – up and supplied to C. G. Archaeology by John D Clarke and Partners.

10.0. REFERENCES.

Bax, A. R. 1896. 'Inscriptions in the churchyard of All Saints Hastings'. *Sussex Archaeological Collections* **XL**.

Dunkin, D. and Greatorex, C. 2008. 'An archaeological desk – based assessment for All Saints Church, All Saints Street, Hastings, East Sussex'. *Unpublished C. G. Archaeology Report No. 08 / 13*.

Gallois, R. W. 1965. *'British Regional Geology, the Wealden District'*. HMSO.

Whiteman, K. and Whiteman, J. 1994. *'Ancient churches of Sussex'*. S. B. Publications.

HISTORICAL ENVIRONMENT RECORD SUMMARY SHEET.

Site Code.	ALL 09					
Site identification and address.	All Saints Church, All Saints Street, Hastings					
County, district and / or borough.	East Sussex					
O.S. grid ref.	TQ 82820 09880					
Geology.	Wadhurst clay and Ashdown Sand deposits					
Project number.	09 / 11					
Fieldwork type.	**Eval.**	**Excav.**	**W.Brief.** X	**Survey.**	**Other.**	
Site type.	**Rural.**	**Urban.**	**Other.** Churchyard			
Date of fieldwork.	15th - 24th September 2009					
Client.	John D Clarke and Partners.					
Project manager.	Christopher Greatorex					
Project supervisor	Annalie Wood					
Period summary.	**Palaeo.**	**Meso.**	**Neo.**	**B. Age.**	**I. Age.**	**R – B.**
	A. S.	**Med.**	**P. Med** X	**Other.**		

Project Summary.

An archaeological watching brief was maintained on the excavation of a new service trench (drainage and gas) across the cemetery of All Saints Church, All Saints Street, Hastings. No significant fresh information concerning the origin or early history of the church and / or its immediate locale was discovered during the fieldwork. Nevertheless, a human skull exposed within the new service trench is believed to represent the remains of an *in-situ* adult inhumation. No archaeological excavation of this undated interment was required. A small assemblage of disarticulated / displaced human bone indicative of earlier graveyard disturbance was also recovered from the deposits stripped from the route of the trench. As a result of the watching brief, the footings of the church's early 15th century north aisle were demonstrated to be of sandstone and flint construction. The sandstone and brick footings of the 19th century vestry were also recorded. A significant quantity of 19th century tile and brick was noted during the project. It would seem likely that at least some of this material was derived from the later 19th century demolition of four buildings once located at the south – west corner of the cemetery.

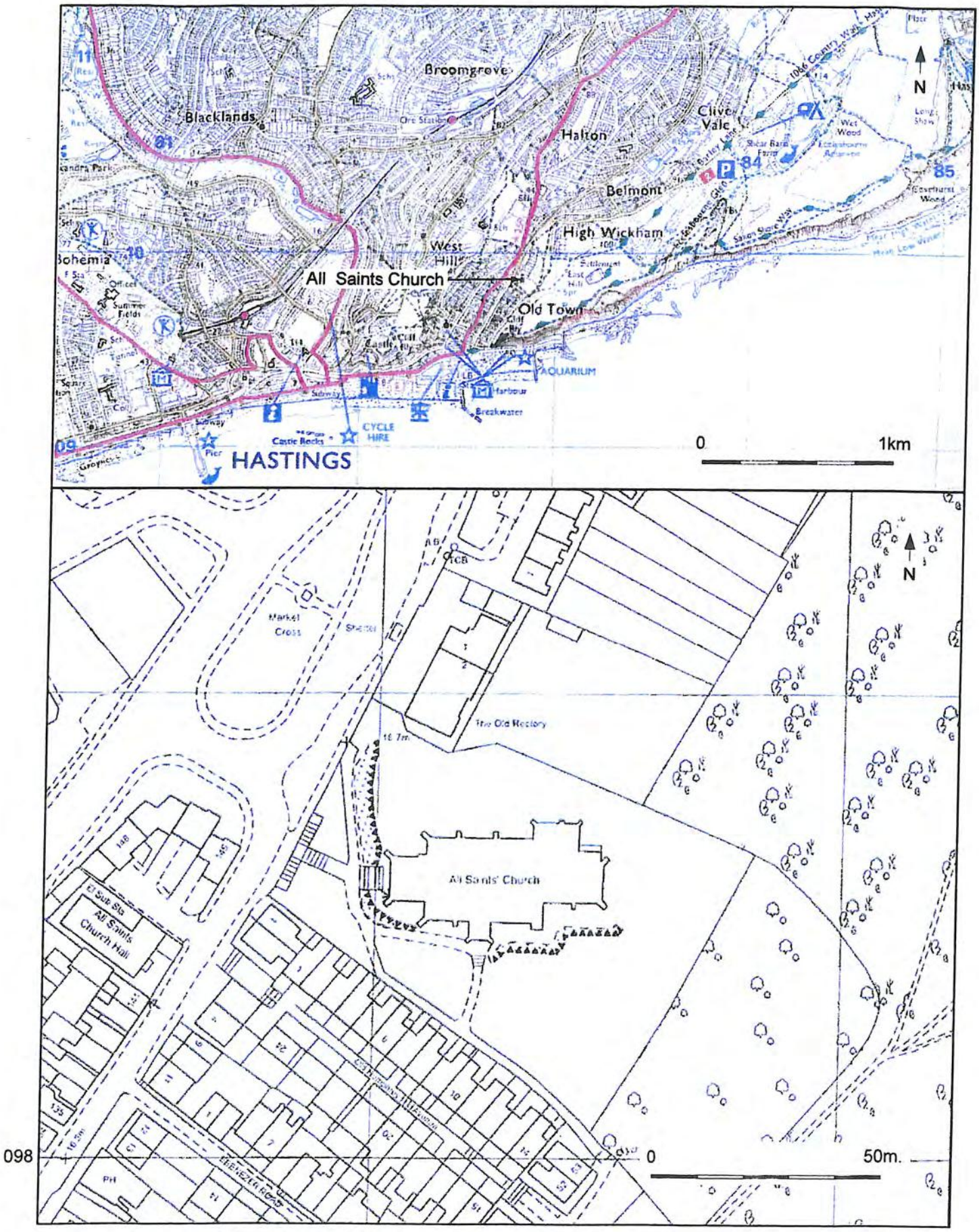

Fig. 1: Site location plan

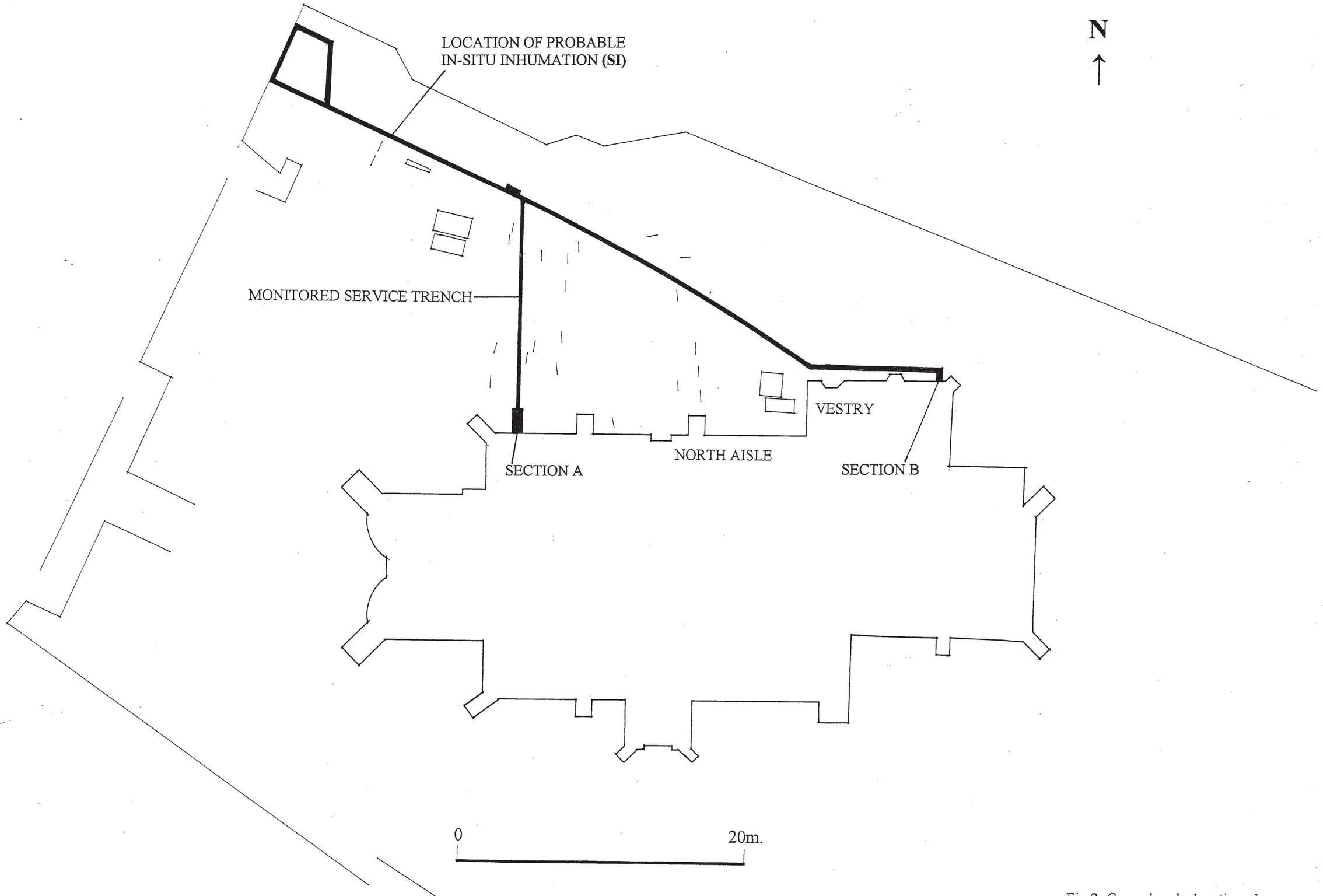

Fig 2: Groundworks location plan

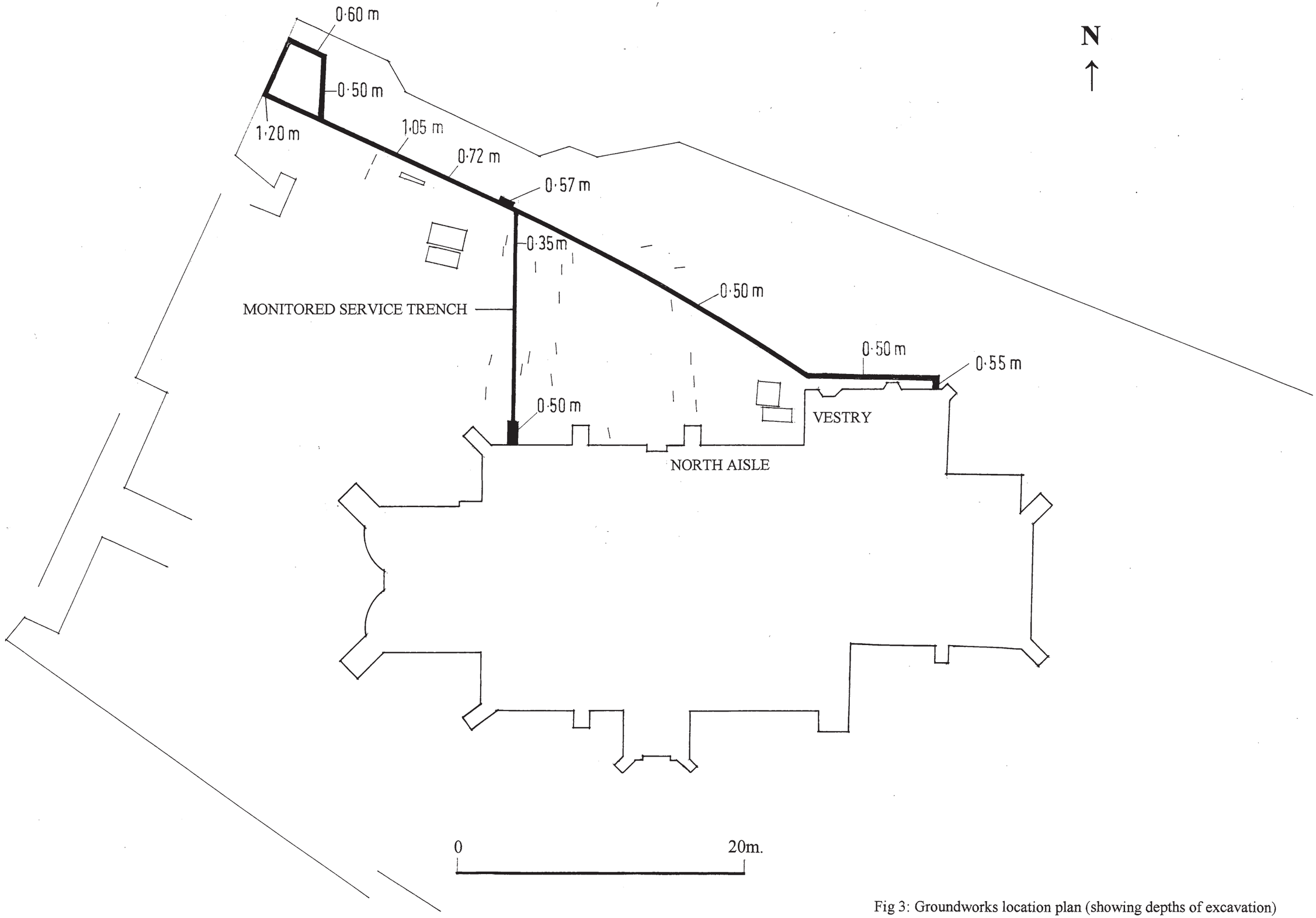

Fig 3: Groundworks location plan (showing depths of excavation)

SECTION A: NORTH AISLE

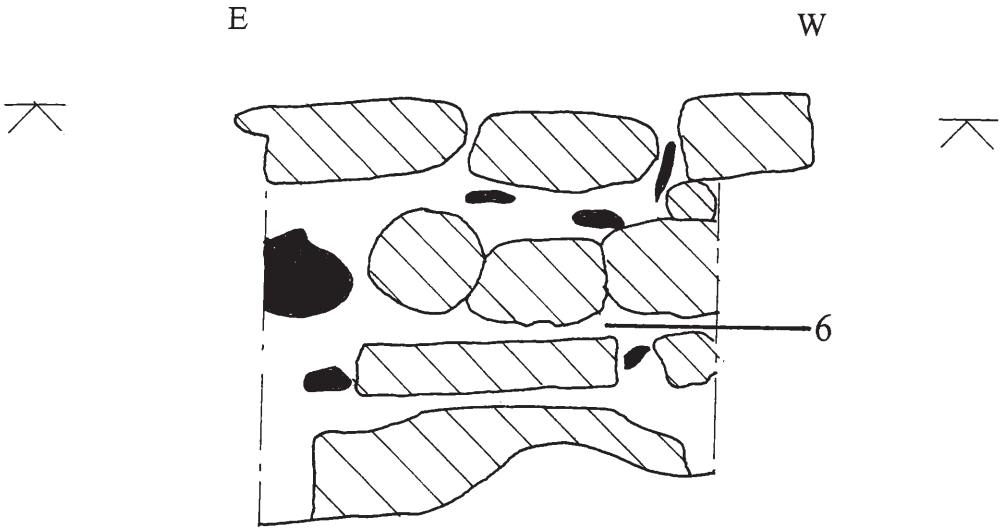

SECTION B: VESTRY

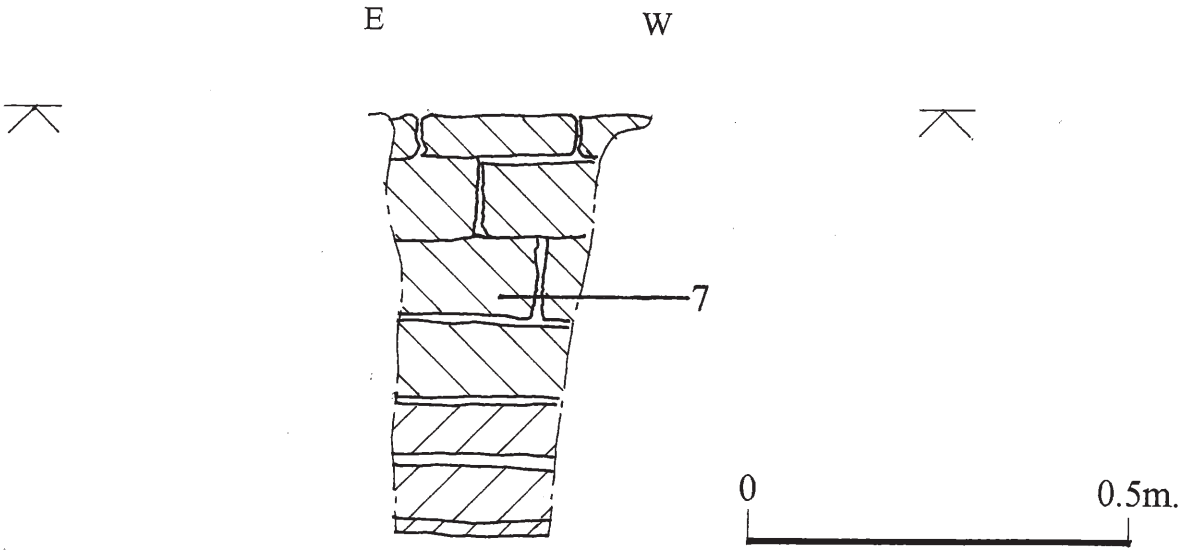

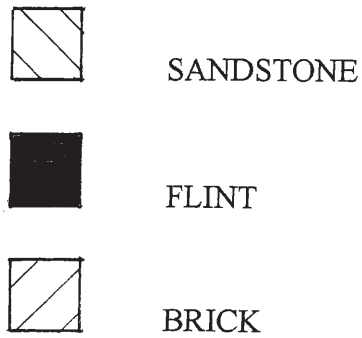

Fig 4: Section drawings