Grave 11998

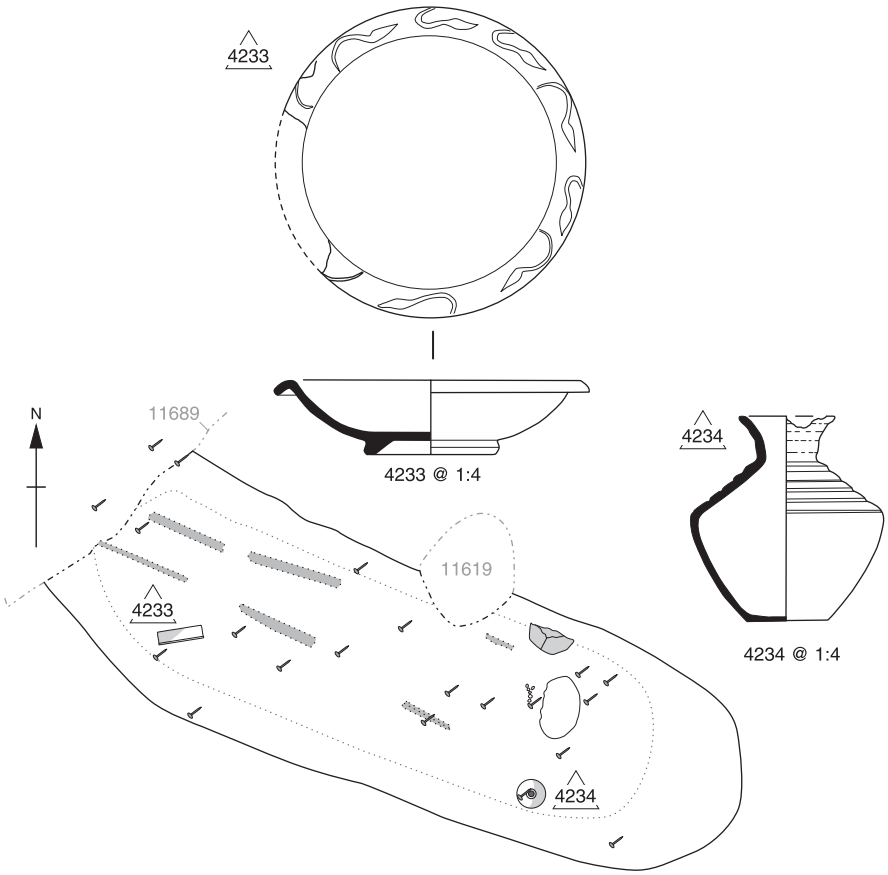

Grave 12005

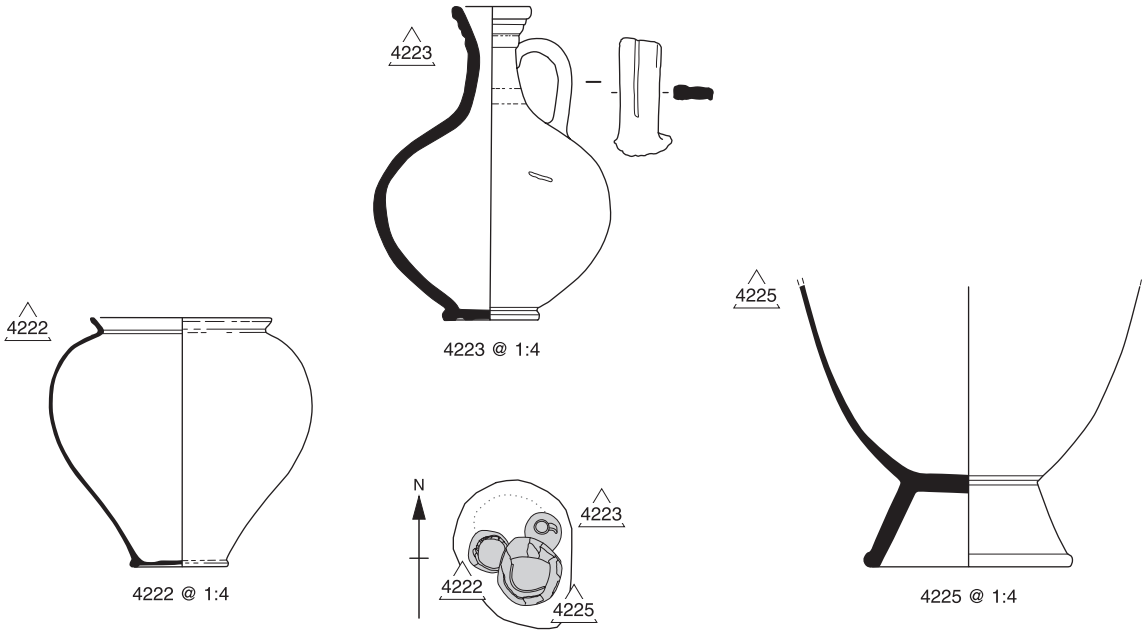

0 1 m

plans 1:25