TECHNICAL SECTION

THE LEVERHULME PROJECT ON CHEMICAL DECAY AND THE DETECTION OF ORGANIC RESIDUES

In an effort to understand more about the mechanisms of preservation of organic remains under the specific conditions at Sutton Hoo, a series of scientific analyses have been undertaken. The very acidic, free-draining, sandy soil creates an environment in which organic material is only preserved at one extreme of the preservational spectrum, ie. as residual traces of the original (degraded) material. The basic assumption is that these trace residues will have a chemical 'signature' peculiar to the material they originated from. By finding these signatures, it should then be possible to identify organic residues that cannot be visually assessed, and also locate and identify non-visible residues.

The use of trace-element analysis of the organic residues from the burials has been explored. The technique utilised was Inductively-Coupled Plasma emission spectrometry (ICP). This is a fast and accurate method by which the concentration of up to thirty elements can be simultaneously measured. The method utilises a powerful acid digestion process to break down the solid samples – a mixture of hydrofluoric and perchloric acids is used – which are then introduced as an aerosol into the very hot plasma 'torch'. Temperatures of 6000–10000°K are achieved, producing a thorough atomisation of the analyte. Our material was analysed for an array of 25 elements, with throughput time for the digested liquid samples being c.1 minute.

A number of grave fill, body and wood samples from an inhumation at Sutton Hoo were run, but there was a malfunction in the computer adjustment which affected the results of some of the wood samples. This produced a statistical under-representation of the wood material, so a characterisation of the wood remains was not effected. However, a good differentiation was apparent between the elemental content of the body samples, and that of the grave fill. A total of 17 elements were shown to be distinctive in their concentrations between the two types of material – Al, Ba, Ca, Ce, Co, Cr, Cu, K, La, Mg, Mo, Na, P, Sc, Sr, Ti and Y. By use of a discriminant formula into which the concentrations of these elements in an unidentified sample could be fed, it would thus be possible to state whether that unknown was body residue or not.

This is of course a preliminary result, and more work needs to follow on the characterisation of other types of organic residue recognisable from Sutton Hoo. However, the first results provide a basis on which relatively quick and simple elemental analysis can distinguish between organic residues – without resorting to more complex organic chemical analysis.

In order to extend the scope of the work to material from other types of burial environment, it is of course necessary to examine in more detail the mechanisms by which the organic material is retained in the soil. To this end, we have begun experiments to determine more closely the nature of the colloidal material in the soil at Sutton Hoo. This material consists of clay minerals and humic substances. We have so far examined methods of extraction of the humics – using a standard alkali extraction procedure, a yield of 2.5% by weight of humic material was produced from the body samples (the grave fill background being 0.67%). Other methods are being attempted in order to increase this yield. It is intended to characterise the extracted humics using IR spectroscopy or NMR. It is also hoped to identify the clay minerals present. With this information, an understanding of the mechanisms by which the organic breakdown products are held in situ should be gained.

Some organic analysis of the material has been carried out, as part of the characterisation process. Amino-acid analysis has revealed a basic pattern of amino-acids in

all samples, but with a clear enhancement in the organic residues (body and wood), over the background. It was also possible to distinguish between body and wood residues – the concentration of cystine, for example was much higher in the wood samples. Further analysis is required, to produce statistically viable results. Other organic analyses, such as HNO and polysaccharide content, are being undertaken.

Further work is also being carried out by external bodies. At the Oxford Radiocarbon Accelerator Unit, comparative dating of the humic extracts and the extant bone is being attempted, in order to assess the contemporaneity of the organic residues with the original burial. This will give a clear indication of the origin of the humic material in the burial silhouettes, e.g. whether it is derived directly from the body decay products, or from subsequent soil processes such as soil biota activity. At University College Cardiff, work has been undertaken to find glycerols and lipids in the residues, and at Manchester University, histological examination of the surviving bone has been carried out. The results of all this work have not yet been fully assessed, but promise to be of great interest.

Another aspect of this archaeological chemistry work is the use of the elemental analysis to provide pointers towards the possible use of chemical indicators to locate and identify residues in the field. One experiment has been carried out, an attempt to use an indicator spray as for feature location on the excavation surface. At Sutton Hoo, a standard soil phosphate spot-test was used, with two reagents – an HCl/ ammonium molybdate mixture, and ascorbic acid – being sprayed one after the other over the excavation. A blue colouration was discerned after a few minutes. The experiments met with mixed success, the first trial apparently enhancing the known graves. Subsequently, contamination in the spraying vessels affected the result, and the apparent success of the initial attempt could not be repeated. However, this avenue of experimentation is being pursued, for other target elements.

The work so far has shown enormous promise, and will continue to be expanded to look at material from other sites. It is hoped that our results will lead ultimately towards a better understanding of the relationships between organic residues and burial environment, and thus towards an enhanced predictive ability. This would be of great value to archaeologists, as a tool for more effective cultural resource management.

P. Bethell
J. Miles

MOULDING 'SANDMEN' FOR EXHIBITION — A PRELIMINARY NOTE

The idea of moulding three-dimensional models of Anglo-Saxon burials excavated as 'sandmen' (the term beloved by the press), originally came to the surface during a visit by the director to Wingfield College, Suffolk, where he was to give a lecture. This charming house is owned by the painter Ian Chance whose garden is notable for its enchanting design, and fine anthropomorphic fibre-glass sculptures. The techniques for moulding the sculptures with silicon rubber (using the naked bodies of models) was fully explained; and a contact with the suppliers, K and C Mouldings of Diss, led to a series of field experiments guided by Mr George Edens, the company's sales manager.

A silicon rubber mix, made in a de-bubbling vacuum chamber, is trickled onto the body form (brushing it on would damage the surface of the sandman as the mixture is thick and sticky), until the body is completely covered. When the mixture has set overnight, fibre glass tape coated in clear casting resin is laid in strips at strategic points across the body to form a support. Bridges of wood can also be incorporated into this support, but care must be taken not to allow any of the support into overhangs caused by the shape of the body. After 3–4 hours the hardened support is removed and inverted. The silicon rubber mould is peeled off the body, inverted, and laid onto the supporting frame. The inside of the silicon rubber mould will retain a coating of sand from the body (which may include fragments of bone and tooth enamel, as some damage to the body is unavoidable). A mixture of dry, stone-free sand and clear casting resin is painted onto the inside of the mould and left to harden overnight, preferably somewhere warm. Fibre glass matting and tape, coated in resin, are laid in strips on the inside of the mould until all the surface is covered with 2–3 layers. This is left to set until hard and dry (about 2–3 hours). The replica is turned the right way up again and the silicon rubber mould is carefully peeled off, leaving a slightly sticky, sandy replica of the sandman. This will dry, and can be painted with car spray paint if necessary, although so far the dark brown colour produced by the sand and resin mix is fairly close to the colour of the sandman in the ground. Three burials were replicated in this way (one prone burial, one headless burial, and the 'hanged man').

The high cost of the silicon rubber led to a search for alternative methods being undertaken by the British Museum (Bradley and Oddy, Sutton Hoo Archive Z8/4(4) 1987), with the following result.

The sand body was sprayed with three coats of Vinamul (to prevent the absorption of the latex by the body) and then five coats of latex were painted on, each at ½ hourly intervals. This was left to dry overnight. Any overhangs were packed with plaster of paris, and then a layer of aluminium foil was put over the body, fitting all the contours. Lawn edging was arranged around the outside of the body, against the sides of the grave. Polyurethane foam was then mixed in small quantities and poured inside the lawn edging until it foamed up to the top, completely covering the body. When set, this was removed and inverted to form the support for the latex mould. The foil and plaster were removed, and the latex mould peeled off and laid in its support. The process then continued as in the first method. A complicated double grave was moulded using this second method, which proved to be very successful, as faint traces of ribs etc. were picked up by the thinner, more flexible latex mould.

It is hoped that further experiments with moulding materials will be carried out in collaboration with the British Museum in future seasons. These experiments are a valuable addition to the work of the project, since the moulds not only form a popular element of a visit to Sutton Hoo, but provide us with a permanent three-dimensional record of fragile and elusive information.

M.O.H. Carver
C.L. Royle

Bibliography

Bradley, S.M., and Oddy, W.A. 1987: 'An Investigation of Consolidation of Soils from the Sutton Hoo Excavation' *Sutton Hoo Archive* Z8/4 (4).

REMOTE PLOTTING AT SUTTON HOO: A NEW WAY OF PLANNING

Data acquisition strategies on large open flat sites have traditionally included drawing contexts (soil changes) and features (interpreted edges) in two dimensions, using a coded or naturalistic legend, or a combination of the two. The policy initially adopted at Sutton Hoo comprised two-dimensional planning in 1m square modules using planning frames sited by a string-and-nail grid. All stones were drawn and sand textures were colour-coded. The scale was 1:10 with 1:100 monitor maps being prepared at intervals.

Following the 1986 season a review of the records was undertaken by Andrew Copp (Copp, Sutton Hoo Archive Z8/1(49)) who found it to be inadequate in several particulars.

The balance between criteria for good visibility and the swift erosion of clean surfaces by wind and rain meant that the ground must be worked in areas of 16 x 8m or greater. Even the smallest module therefore required four planners if the informa- was to be captured anywhere near peak definition. This led to inconsistency of colour, symbol and measurement between lanes and areas, in some cases to an unacceptable degree.

The approach to planning would have to be rethought in any case before excavation commenced on barrows, where a stable grid was mechanically impossible to sustain. Accordingly this aspect of data acquisition was redefined as follows. The act of planning was deemed to comprise 1) a 'naturalistic' measured account of the soil variables at a certain level of enhancement (see Carver 1986:78); and 2) an interpretation of context and feature edges, usually indicated in the form of dashed lines. The proposition was simply to regroup these components in a different way, viz, 1) an account of the textural and colour variations; this would be recorded by oblique high resolution colour photography, subsequently marked up with stratigraphic unit numbers using an overlay; 2) a measured record of interpreted context and feature edges achieved (in three dimensions) simply by putting the dashed lines lines on the site, (instead of on the plan), using white tags and nails. The position of each tag is plotted and logged using a remote plotting technique which generates x, y, z co-ordinates for each point (see Fig. 12, 13; the method is described in Carver 1987).

The array of points logged in the Data Base can be used to generate the edges or surfaces of contexts and features, or combinations of contexts together, such as a barrow or ship impression. In practise, the x, y co-ordinates are used immediately to produce 1:10 plans and 1:100 monitor maps for checking whilst the horizons are still tagged and visible. The method is more accurate and far more consistent than planning using nails and string.

M.O.H. Carver

Bibliography

Carver, M.O.H. 1986: 'Recovery Levels' *Bulletin of the Sutton Hoo Research Committee* 4: 78

Carver, M.O.H. 1987: 'Graphic Recording at Sutton Hoo' *The Field Archaeologist* 7: 102-3

Copp, A.J. 1987: 'Report on the excavation of graves 1984-6' *Sutton Hoo Archive* Z8/1(49)

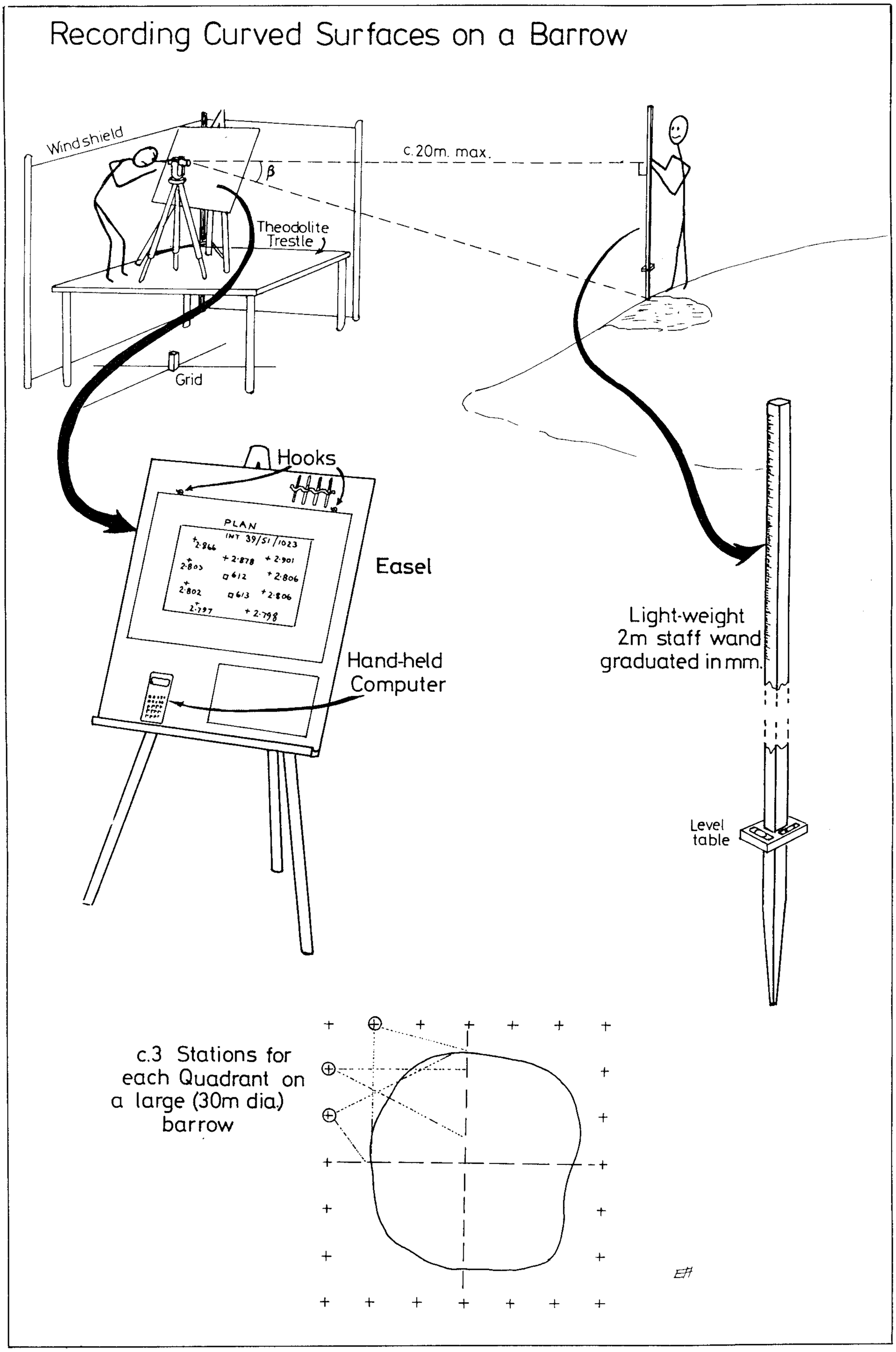

Fig. 12: Recording curved surfaces on a barrow (Hooper).

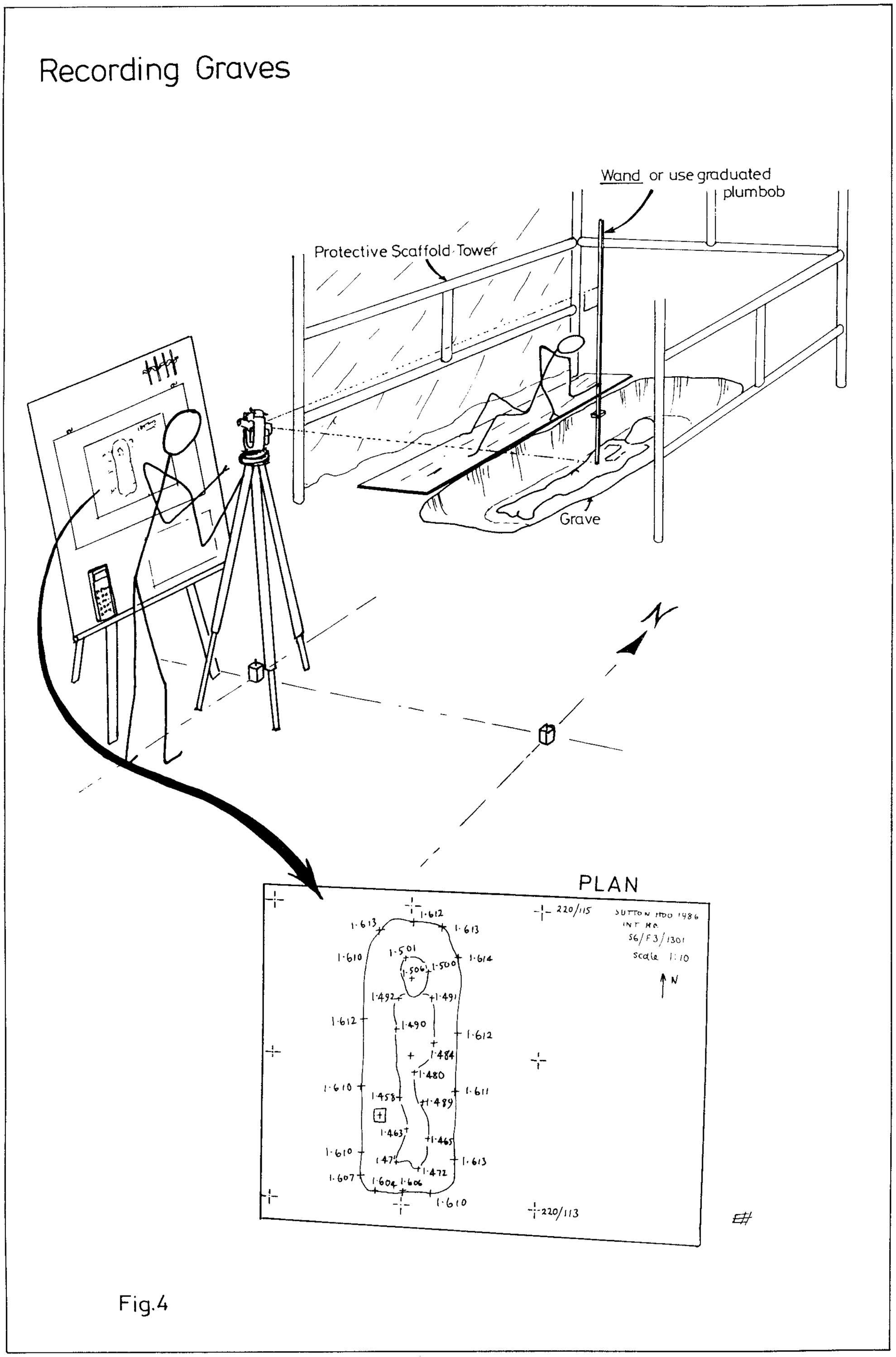

Fig. 13: Recording graves (Hooper).

THREE-DIMENSIONAL GRAPHICS AT SUTTON HOO: SOME PRELIMINARY INVESTIGATIONS

Discussion with members of IBM's UK Scientific Centre suggested that the three-dimensional manipulation and enhancement of data derived from the Sutton Hoo project might prove beneficial to the analysis and presentation of the current investigations.

Computer graphics have a potential role in almost every aspect of the archaeological endeavour. The growing interest in the archaeological computing world in terrain-modelling is a development with major implications for the analysis and presentation of topographic data. Certainly, this is true of the Sutton Hoo project, where computer graphics are being used with mixed success as exploratory tools. The survey data was an obvious starting point.

Several surface features which may represent further burial mounds, including numbers 15, 17 and 18, have not been fully defined. Although they have been seen on occasion, under exceptional lighting conditions, they have not yet been isolated or recorded. When the many thousands of spot-height recordings taken from the surface of the cemetery at the start of the present campaign are plotted as dots on a plan, it can be seen that the density of spot-height readings is by no means uniform. In fact, a much greater number of readings are apparent around the more obvious earthwork features, such as the then known mounds and anti-glider trenches for example. Ironically, it is precisely in those areas which are now thought to contain other, but topographically less distinct mounds, that the density of data points is the lowest. These levels were available as digital data, and had been computer contoured in 1984 (Carver 1984:1). The original contour plan provides a reasonable resolution but may still mask quite a lot of interesting detail.

More of the information held in these readings can be assessed if the readings are presented in a three-dimensional form. The simplest method is simply to place a three-dimensional marker on each data point. Colour may be used as a simple height cuing device, with a unique colour representing each range of height values. Most of the mounds show up clearly using this technique. This data was also displayed three-dimensionally on an IBM 5080 graphics device. Using this unit one is able to shear away slices of the displayed image in the vertical direction. This is a very effective device for showing any topographic discontinuities.

Exaggerating the vertical scale in the Sutton Hoo data brings out further details about the site. In particular small islands of points perhaps representing as yet unidentified mounds have been revealed. Moreover, the full 3-D real-time graphics facilities have the great advantage of being capable of simulating the aerial archaeologist 'flying' over the site in order to obtain more informative views. The attraction of this approach is that one is not constrained by seasonal lighting conditions as these may be simulated if necessary. Experience shows that the extra visual cues given by the optical flow, caused by moving around the model in real-time, enables the detection of discontinuities, caused by changes in relief for example, much more quickly than through a series of static views.

A completely different avenue of research involves computer modelling. Initially, one of our main hopes was that we might be able to produce a computer reconstruction of the Mound 1 ship burial. It had been thought that once a computer model had been constructed attempts could be made to model various post-depositional processes such as the collapse of the burial chamber. This approach is interesting since the modeller can create a series of images which can be transferred to a video and animated for example. Such modelling is valuable in that it forces the archaeologist to define explicitly every single element in the model as well as their relationship to other associated components. This exercise forces one to think very clearly about the data, and from that point of view it is very rewarding. Moreover, it produces a working visual summary of the state of our understanding of the object of study. It also allows the public to assimilate a great deal of information rapidly and

with little apparent effort. Furthermore, such models are not like artists' impressions which tend to have foliage, smoke, or a wall conveniently hiding a problematic area!

Progress towards an accurate model of the 1939 ship has frankly been disappointing. The main problem has been that the published accounts, plans and profiles do not provide sufficient detail from which to work out the actual dimensions of the formations found. Moreover, key information such as scales and datums is missing on several plans. We can, however, report the small progress that has been made so far. Work on the reconstruction began with the boat. The published report provides a number of plans and elevations from which measurements could be extracted. The first stage was to digitise the published profiles. These profiles are, of course, hypothetical reconstructions of the hull profiles, derived from the re-excavation of the damaged ship impression in 1965–70. Moreover, the vertical datum values are not given on the sections, and therefore had to be estimated. The readings are certainly not sufficiently dense to use the spot method used on cemetery data. A simple skeletal wire-frame is nowhere near adequate, for there is simply not enough information for the mind to fill in the gaps. To rectify this we have interpolated the readings to produce a wire-framed hull. Unfortunately, the results suggest that the ship's keel had most unusual hydrodynamic properties! If more reliable data becomes available we can produce an interesting model. The data could be fudged to produce a profile similar to that shown in the line drawing reconstructions, but this would simply be an exercise in cosmetics with few obvious analytical benefits. There was little point in progressing further to apply solid patches. The construction of a solid model using the technique of constructive solid geometry, or the set-theoretic model would be equally fruitless requiring too much conjecture.

The experiment did highlight the importance of matching records to model. It is apparent that even if the profiles of the Mound 1 ship could be datum-linked they are too widely spaced and require a considerable amount of interpolation in order to fill the gaps. Happily much greater success can be reported with the sandmen.

Traditional recording methodologies are considered to be inadequate by the excavators (see above). Colour-coded plans only provide two-dimensional records which omit the volumetric information which may be important. The taking of spot-heights using staff and levelling device is time consuming and cannot cope with re-entrant features. Photogrammetry is one method of recording details, and the technique has been used successfully to extract the three-dimensional surface contours of the so-called 'Lindow Man – Pete Marsh' (Lindsey 1985). Jim Hooker has attempted to extract three-dimensional information about the sandmen from stereo-pairs, but the results so far are not very satisfactory (Hooker, Sutton Hoo Archive Z8/1(46)). The approach has many attractions, but it is weak when it comes to recording re-entrant features which cause blind spots in the photographs. Optical contouring techniques also suffer from the same shortcoming.

The provision of an instrument which could be used to probe into, measure, and record in three dimensions such recesses obviously would be a great aid in such circumstances, especially if the data recorded rapidly and was capable of display in three dimensions. Fortunately, a number of three-dimensional digitising instruments which seem to fit these criteria are now commercially available. Specifically, McDonnell-Douglas now manufacture three-dimensional digitising devices, known as 3SPACE TRACKERS, in the USA.

These machines are essentially hand-held probes capable of recording three-dimensional co-ordinates. An RS232 serial interface means that they can be connected to most computers. A more detailed account of this device is given elsewhere (Reilly and Walter 1987).

Early in March 1987, an experiment was undertaken to determine whether the 3Space Tracker represented a workable tool in field situations. The most immediate consideration for using the device in the field was a suitable hardware configuration and power supply. For the purposes of the first field tests a McDonnell-Douglas 3Space Tracker was used in conjunction with an IBM XT with a 10 Mb hard disk. A portable Honda EM650 petrol driven generator provided the necessary power.

Unfortunately, no sandmen could be examined in situ at the time of the visit. However, a number of resin moulds taken from specimens which had been excavated earlier were available for experimentation.

Over 3000 points were three-dimensionally recorded and subsequently examined on an IBM 5080 real-time graphics unit. It transpired that the density of points was so great that the shape of the sandman could be analysed simply by representing each three-dimensional reading by a dot. Feature enhancement was improved by drawing lines through the points forming each transect. The application of pseudo low level lighting to the computer-model brought out details around the rib-cage area for instance (Fig. 14).

Not only can we accurately record in three-dimensions a complex shape, it is also possible to display and analyse the data in real-time. Detailed computer models can be made onto which one can map additional information obtained about decay products for instance. Here again image enhancement techniques may prove useful.

With composite objects there is the problem of defining sub-components, and then deciding where to take measurements from. How many points are necessary to record the full three-dimensional shape of a given object? In a complex free-form object, such as the decay products of a human body, which is perhaps wearing clothes, how does one go about making sure that the various elements of the object are distinguishable? These are just some of the unanswered questions that need to be thoroughly investigated.

OVERALL CONCLUSIONS REGARDING THE WORK SO FAR

The work on the graphics was begun only a very short time ago and the early results are mixed. The experiments involving three-dimensional recording and display are probably the most exciting development to date. The analysis of the surface topography of the cemetery also promises more interesting results. It is already clear that the taking of further spot-height readings will be necessary in the areas where the new mounds are suspected. Work on the reconstruction of the ship-burial will continue. It may be possible to resolve the problem with the ship's profiles using information gleaned from other sources. We will in any case next turn our attention to the burial chamber itself.

Finally, the presentation of the site to the public and professionals alike will hopefully involve much more advanced graphical techniques. The modelling in particular represents an interesting challenge and it is anticipated that the current excavations will provide the necessary information in the appropriate detail.

P. Reilly
J. Richards
A. Walter

Bibliography

Carver, M.O.H. 1984: *Bulletin of the Sutton Hoo Research Committee* 2.
Hooker, J. 1987: Experiments in Recording Burials by Photogrammetry *Sutton Hoo Archive* Z8/1(46).
Lindsey, N.E. 1985: 'Photogrammetric Recording of Lindow Man', pp 31-7 in Stead et al.
Stead, I.M., Bourke, J.B., and Brothwell, D. (Eds) 1985: *Lindow Man: The Body in the Bog* (Guild Publishing, London).
Reilly, P., and Walter, A. 1987: 'Three-Dimensional Digital Recording in the Field: Preliminary Investigations' *Archaeological Computing Newsletter* 10: 7-12.

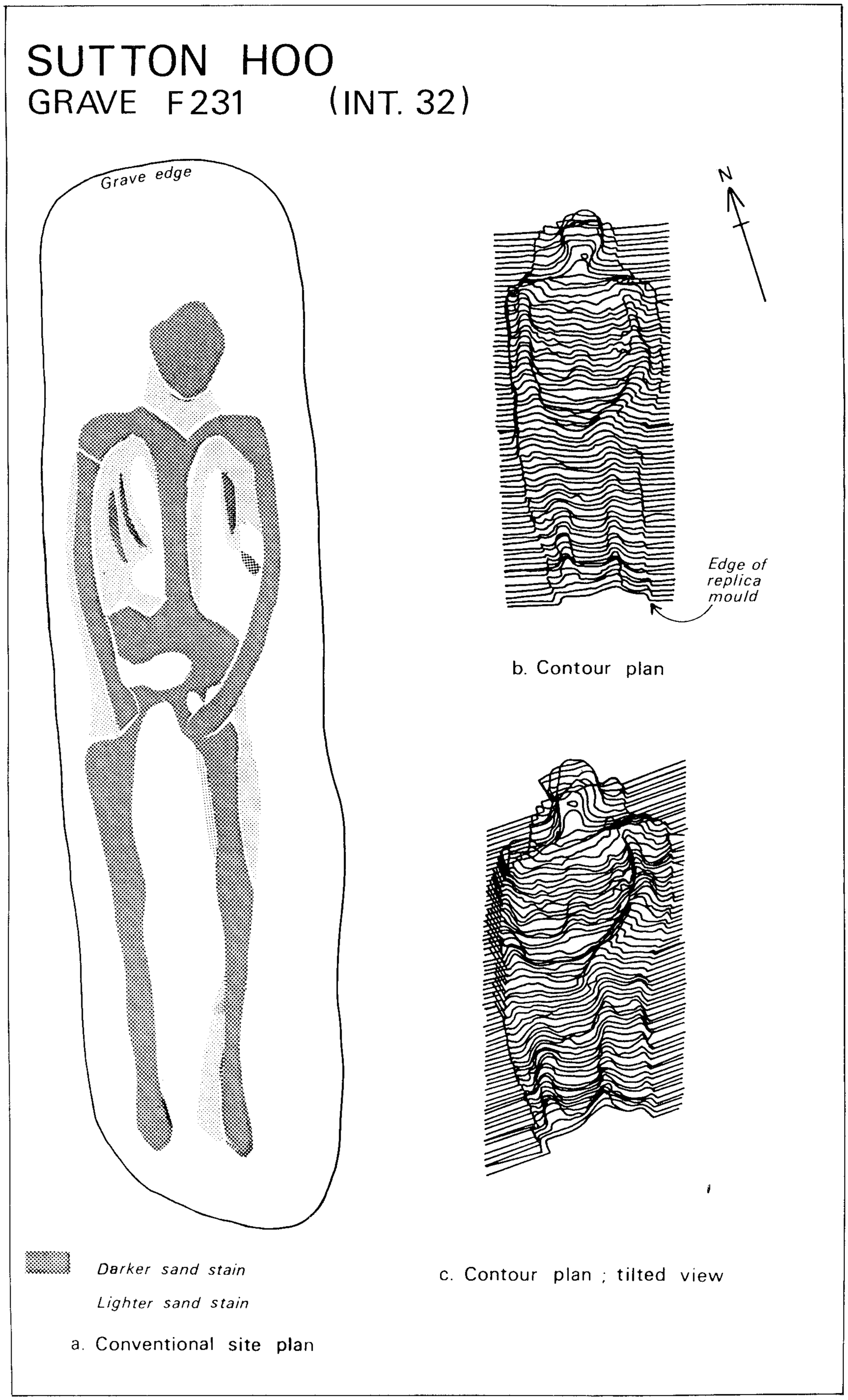

Fig. 14: Grave F231, conventional and computer-contour plans (Royle).

CHRONICLE

ARCHIVE

A NOTE ON THE DATA BASE

The Sutton Hoo data base management system has been designed on the basis of the site evaluation. It has a hierarchical structure so that each entity recorded is a subset of another entity. Thus the *finds* index (c.22,000 finds) is a subset of the *context* index (c.800 contexts) which is a subset of the *feature* index (c.300 features) which, where appropriate, is a subset of the *structure* index (c.10 structures). Each record has a set number of fields, and entries in each field are constrained by a predetermined glossary, each attribute having an analytical destiny. The system is flexible and powerful, allowing routine listing, searching and analyses to be undertaken. Input is from logged readings in Psion Organisers (3-D co-ordinates) or from written records (contex and feature parameters) onto a Sanyo microcomputer. All data are held on duplicated 5¼" floppy disks, and downloaded periodically on the Mainframe computer at York, where they can be directly accessed and manipulated in the Department of Archaeology. Thus students and researchers at York can perform searches and analyses of data less than six months after their retrieval in the field. Separate files are held for each intervention. The full data base and associated suite of programmes may be acquired from the project, by negotiation with the administrator.

REPORTS HELD IN ARCHIVE

The following complete reports, which are referred to in the text, are held in archive:
32/Y8/1 A.J. Copp: *Intervention 32: Archive Report* (10,000 words, 48pp figs and tables).
39/Y8/1 A.J. Copp: *Intervention 39: Archive Report* (3,500 words, 4pp figs and tables).
Z8/1(49) A.J. Copp: *Report on the Excavation of Graves 1984-86* (2,500 words, 5pp figs and tables).
Z8/4(4) S.M. Bradley and W.A. Oddy: *An Investigation of Consolidation of Soils from the Sutton Hoo Excavation* (2,000 words, 3pp figs and tables).
Z8/1(46) J. Hooker: *Experiments in Recording Burials by Photogrammetry* (figs).

PUBLICATIONS

Bethell, P. and Carver, M.O.H. forthcoming: 'Detection and Enhancement of decayed inhumations at Sutton Hoo' in (eds) N. Garland, R.C. Janaway and A. Boddington *Death, Decay and Reconstruction.*
Carver, M.O.H. forthcoming: 'Sutton Hoo' Blackwell Companion to Anglo-Saxon England.
Carver, M.O.H. forthcoming: 'Princely Burials' *Blackwell Companion to Anglo-Saxon England.*
Carver, M.O.H. 1984: 'A new campaign – a new archaeology' *Saxon* 1: 2-3.
Carver, M.O.H. 1985: 'Sutton Hoo' *Current Archaeology* 95: 358-360.
Carver, M.O.H. 1985: 'The Curse of Raedwald' *Saxon* 2: 2.
Carver, M.O.H. 1985: 'Close Encounters' *Saxon* 3: 4-5.
Carver, M.O.H. 1985: 'Confronting the past through new technology' *The Listener* August 29: 13-14.
Carver, M.O.H. 1985: 'Sutton Hoo: Management and Intervention on acid sandy sites' *ICCROM Conference* (Ghent): 27-44.
Carver M.O.H. 1986: 'Anglo-Saxon objectives at Sutton Hoo, 1985' *Anglo-Saxon England* 15: 139-152.
Carver, M.O.H. 1986: 'Sutton Hoo in Context' *Settimane di studio del Centro italiano di studi sull'alto medioevo* XXXII: 77-123.
Carver, M.O.H. 1986: 'The "Ploughman", the "hanged-man" and the cult of Woden' *Saxon* 4: 6-8.

Carver, M.O.H. (ed) 1986: *Bulletin of the Sutton Hoo Research Committee* No 4.
Carver, M.O.H. 1987: 'Graphic Recording at Sutton Hoo' *The Field Archaeologist* 7: 102-3.
Carver, M.O.H. 1987: *Sutton Hoo* (2nd edition).
Copp, A.J. and Royle, C.L. 1985: 'An unusual occupation' *Saxon* 2: 3.
Copp, A.J. 1986: 'Winter Work: making sense of the records' *Saxon* 4: 6-8.
Copp, A.J. 1986: 'Sutton Hoo 1986, seasonal report' *Saxon* 5: 3-4.
Evans, A.C. 1986: *The Sutton Hoo Ship Burial* (London).
Glazebrook, J.M. 1986: 'Barrows, Balloons and Babies' *Saxon* 5: 4-5.
Glazebrook, J.M. 1987: 'The Winter Wonderland' *Saxon* 6: 1-3.
Gorman, M. 1985: 'Beowulf in 3D – Soil sounding radar surveys at Sutton Hoo' *Seismic Images* 8: 24-29.
Reilly, P. and Richards, J.D. forthcoming: 'A new perspective on Sutton Hoo: the potential of 3-D graphics' in (eds) S.P.Q. Rahtz and C. Ruggles *Computer Applications in Archaeology Conference* 1987.

SUTTON HOO SEMINARS

The following invitation seminar has been arranged: –

SUTTON HOO AND RITUAL CONTINUITY (organised by William Filmer-Sankey) to be held at the Institute of Archaeology, Oxford, 3rd–5th April 1987.

A public seminar entitled *SUTTON HOO – THE SEARCH FOR THE KINGDOM* was held at Birmingham on 15th March 1986, organised by the University of Birmingham Department of Extra-mural Studies, and Field Archaeology Unit. The speakers were M.O.H. Carver, C.M. Hills, G. Hutchinson, J. Newman, and R. Hodges. A recording of the BBC television programme 'Sutton Hoo – the search for the Kingdom, part 1' was shown.

PUBLIC LECTURES BY THE RESEARCH DIRECTOR, 1986/7

Societies: Woodbridge Museum, Sutton Hoo Society, Oxford Antiquaries Dining Club, Huddersfield and District Archaeology Society, East Riding Archaeology Society, Ipswich Archaeological Trust, York Archaeology Society, Society of Antiquaries of London.

Universities: University College of North Wales Archaeology Society, Northern Universities Archaeological Research Society, Stockholm University Archaeology Society, Uppsala University Department of Archaeology, Durham University Archaeology Society, London University Archaeology Society, Leicester University Department of Archaeology.

Institutions and Authorities: Jorvik Viking Festival, Isle of Thanet Archaeology Unit, Dorset Institute of Higher Education Department of Tourism and Field Sciences, Institute of Electrical Engineers (Ipswich).

Conferences:
Bradford University 'Geophysical and Geochemical Prospection'
Durham University and Leeds University 'Death, Decay and Reconstruction'
Cambridge University 'The Anglo-Saxon Kingdom of East Anglia'
National Museums and Galleries on Merseyside 'Anglo-Saxon Cemeteries'
Oxford University 'Anglo-Saxon Kingdoms'

BBC TELEVISION BROADCASTS

The first programme in the series 'Sutton Hoo – the search for the Kingdom', directed by former 'Chronicle' producer, Ray Sutcliffe; was broadcast in August 1985, together with a remake of 'The Million Pound Grave' originally shown in 1965. Both these programmes are scheduled for transmission again in April 1987, when they will be followed by the new programme 'Sutton Hoo – the last of the pagans'.

THE SUTTON HOO SOCIETY

THE SUTTON HOO SOCIETY is entering its fourth year, and is now presided over by The Duke of Edinburgh. The Society continues to support the work of the Trust, particularly in presenting Sutton Hoo to the public. Guided tours and access by ferry have been arranged once again for the summer, and visits to the site are co-ordinated by the Secretary. Enquiries about membership should be made to the Membership Secretary, c/o NatWest Bank plc, Cumberland Street, Woodbridge, Suffolk IP12 1JD.

The Society's officers, as at 1st April 1987, are as follows:

Chairman	Malcolm Miles
Hon. Secretary	Robert Beardsley
Hon. Treasurer	John Aldridge
Hon. Membership Secretary	Elizabeth Miles
Publications	Mark Mitchels
Publicity	Donald Brooks
Ferry	Robert Simper

SPONSORSHIP AND EXPENDITURE 1986/7

Grateful acknowledgement and appreciation is due to the following organisations who supported the work of the Trust in 1986/7:

The British Museum, the Society of Antiquaries, the British Broadcasting Corporation, the National Maritime Museum, the Scarfe Trust, the Aurelius Trust, the Royal Historical Society, Trinity College Cambridge, the British Academy, the Norwich Union Insurance Group, the East Anglian Daily Times, Suffolk County Council, The Leverhulme Trust, Manpower Services Commission.

The Trust is also grateful to the following who supported their work in 1986/7 with the loan or gift of equipment in kind:

Aldous Homes Ltd (backfilling by machine)
F. Ingram-Smith Ltd (loan of Portacabin)
Brian Ribbans (hot-air balloon flights)
Stephens and Carter Ltd (scaffolding tower at concessionary rate)
Sutton Hoo Society (Honda generators, scaffolding tower, freestanding sieves, mobile home)

and acknowledge with gratitude the sponsorship by BOYDELL & BREWER LTD of the publication of *Bulletin of the Sutton Hoo Research Committee* No 4.

The Trust is grateful to the British Museum for the secondment of Angela Evans as site supervisor during the 1986 season, and for services by the conservation laboratory; to the National Maritime Museum for advice, support and the secondment of Gillian Hutchinson; and to the Committee and members of the Sutton Hoo Society for their many services to the site and research team throughout the year, which included financing one of the site supervisors during this year's training session.

Sutton Hoo Research Project
Statement of Expenditure, 1986-7

Expenditure	£
Director	8,416
Project Management	9,532
Project Staff	19,298
Equipment and site services	13,246
Training session, August – September 1986	7,664
Environmental Research (MA)	2,200
Archive processing and programming	2,100
Illustration and publication	5,291
Fundraising and publicity	2,000
East Anglian Kingdom Survey	5,260
	75,007
MSC Team staff	23,489
Equipment and running costs	1,085
Travel	3,807
	28,381
The Leverhulme Project	21,000

PARTICIPATION 1986/7

The Project Team

Director	Professor Martin Carver
Consultant on Prehistory	Dr Ann Ellison
Management	Andrew Brooker-Carey
Assistant Manager	Jenny Glazebrook
Supervisors	Andrew Copp
	Catherine Royle
Photogaphy/graphics	Nigel MacBeth
Illustration/publications	Elizabeth Hooper
Environmental Assistant	Ago Favoro
Computer programming	Richard Young
Secretarial Assistance	Ann Humphries, Rose Young
Leverhulme Project Supervisor	Phil Bethell
Leverhulme Research Assistant	Joanne Miles

The Manpower Services Commission Team

Andrea Wright, Robert Olley, Tim Browne, Elaine McEwan, Phil Camps, Katrina Copping, Jackie Collins, Karen Geisler, Celia Legget.

The Research Director would like to thank:

Stanley West and Keith Wade of the Suffolk Archaeology Unit for their support and advice, John Newman of the Suffolk Archaeology Unit for his work on the regional survey, Ago Favoro for his work on the environmental evidence at Sutton Hoo, Nick Balaam of the Historic Buildings and Monuments Commission for his environmental Research Design, Hazel Newey and Andrew Oddy of the British Museum for their help with replication of 'sandmen', Mike Gorman of the Scott Polar Institute for his work with the soil sounding radar; Paul Reilly and Andrew Walters of IBM, and Julian Richards of the University of York, for their research into computer graphics; Jim Hooker, City University, for assistance with photogrammetry, Ray Sutcliffe and BBC film crews for comment and advice, Helen Atkinson of the Department of Quaternary Research, University of Stockholm, for environmental assistance;

and the following, who participated in the 1986 training session:

Phillip Rahtz, Peter Leach (senior supervisor); Angela Evans, Gillian Hutchinson, Paul McCulloch, John Newman, Sally Foster, Phil Blackburn, (supervisors); Brett Noble, Nina Jaffa, Martin Reid, Lorna Watts, Judy Lawrence, Carol Williams, Eadaoin Campbell, Paul Campbell, Daniel Caplan, Imelda Carroll, Dermot Christie, Fiona Dickinson, Colm Donnelly, Denise Farrell, Fiona Fawcett, Michael Flitcroft, Paul Glover, Nick Griffiths, Julie Harper, James Ingmire, Mark Johnson, Nick Johnson, Edmund Lee, Daphne Lloyd, Andrew Mitchell, Carol O'Regan, Christopher Penny, Timothy Pestell, Mike Redshaw, Toby Simpson, Klara Spandl, Deborah Stannard, Ann Trewick, and Jonathan Webb;

also Peter Berry, for his untiring efforts, advice and help on matters of site management and accommodation for the team; Rosemary Halliday for feeding the site team throughout the training session; and Clare Foss, Karen Pfisterer and Dee De Roche for their continued voluntary help, throughout the year.

The Trust is grateful to Mrs Anne Tranmer and her Trustees for their kind permission to carry out the research, and to Mr Peter Waring for permitting research in fields surrounding the scheduled area.

THE SUTTON HOO RESEARCH COMMITTEE

Research Director:
Professor M.O.H. Carver
Department of Archaeology
University of York
Micklegate House
Micklegate
York YO1 1JZ
Tel: 0904 36731

Suffolk Archaeological Unit:
Director: Dr S.E. West, MA, FSA
Field Officer: K. Wade, BA
Suffolk County Council
St Edmund House
Rope Walk
Ipswich IP4 1LZ
Tel: 0473 230000

Project Team:
Administration: J.M. Glazebrook
Supervisor: A.J. Copp
Sutton Hoo Research Project
Sutton Hoo
Woodbridge IP12 3DJ
Tel: 03943 7673

Sutton Hoo Society:
Chairman: M. Miles
Secretary: Sqdn. Ldr. R. Beardsley
c/o NatWest Bank plc
Cumberland Street
Woodbridge IP12 1JD

The *Sutton Hoo Research Trust* is a registered company under limited guarantee.

Registered Office at:
The Society of Antiquaries of London
Burlington House
Piccadilly
London W1V 0HS

Registered Charity No: 290724