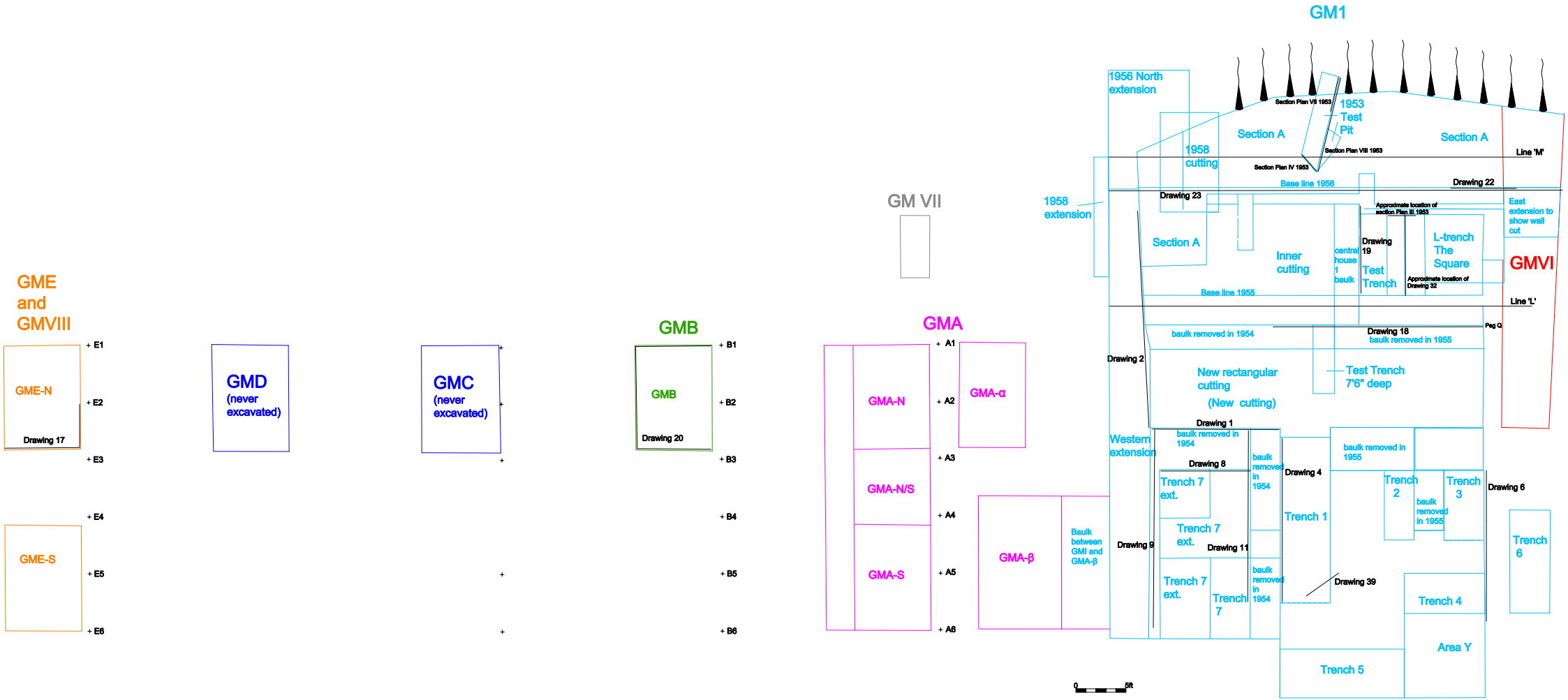

Figure 17: Trench/Cutting location plan for sites GMI, GMA, GMB, GME, GMVI, GMVII and GMVIII. Also shows locations of section drawings.

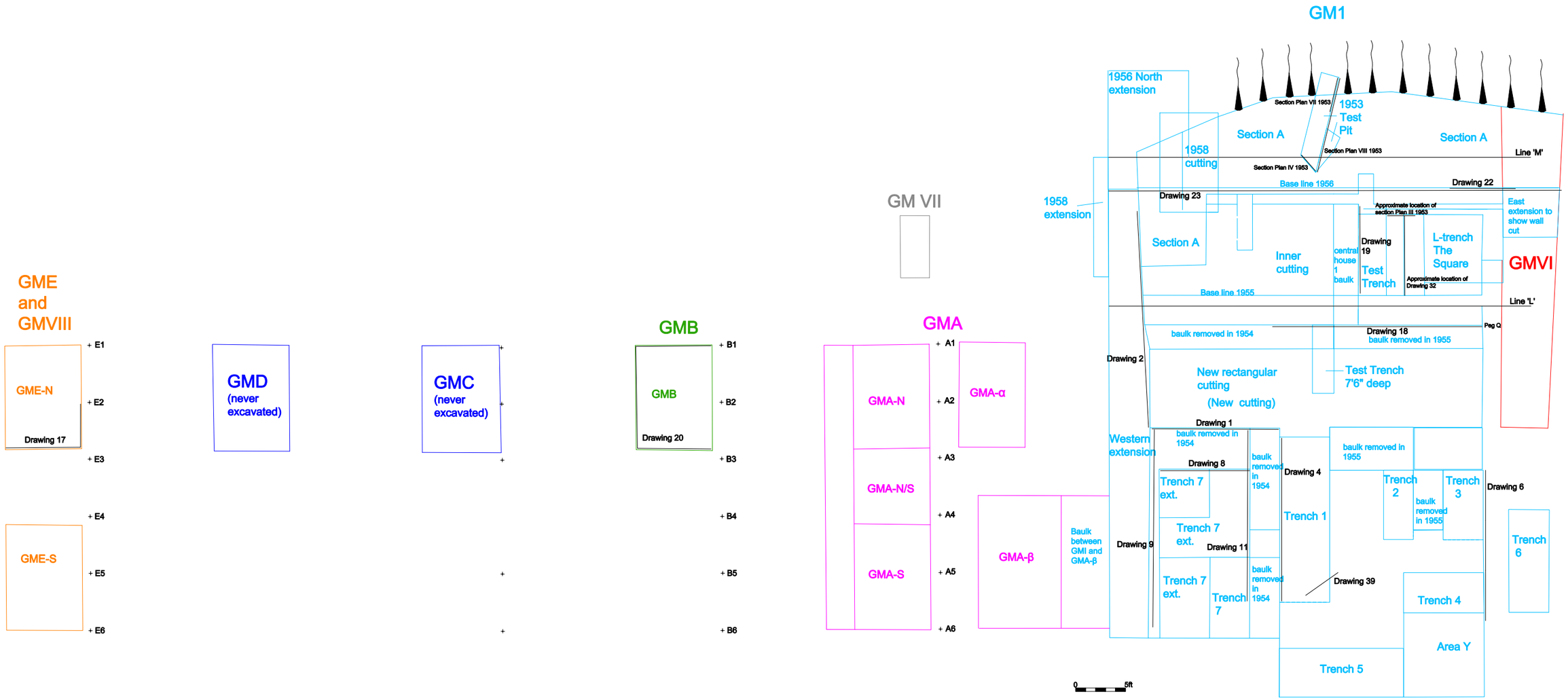

Figure 17: Trench/Cutting location plan for sites GMI, GMA, GMB, GME, GMVI, GMVII and GMVIII. Also shows locations of section drawings.