2946

Ancient Monuments Laboratory
Report 80/2000

TREE-RING ANALYSIS OF TIMBERS FROM THE BUILDINGS AND LIVINGTREES AT STONELEIGH ABBEY, STONELEIGH, WARWICKSHIRE

R E Howard
R R Laxton
C D Litton

Opinions expressed in AML reports are those of the author and are not necessarily those of English Heritage (Historic Buildings and Monuments Commission for England).

Ancient Monuments Laboratory Report 80/2000

TREE-RING ANALYSIS OF TIMBERS FROM THE BUILDINGS AND LIVINGTREES AT STONELEIGH ABBEY, STONELEIGH, WARWICKSHIRE

R E Howard
R R Laxton
C D Litton

Summary

One hundred and ten samples from nine buildings at Stoneleigh Abbey were analysed, producing nine site chronologies.

A chronology from the gatehouse roof and gateway ceiling has 223 rings spanning AD 1124 – AD 1346. The felling date of the ceiling timbers is estimated as AD 1342 – 44, those of the gatehouse roof as AD 1348 – 9. From the gateway doors a chronology of 142 rings was created spanning AD 1405 – AD 1546. These samples give an estimated felling date in the range AD 1561 – 86.

The gatehouse produced two further site chronologies. The first has 272 rings spanning AD 1387 – AD 1658. An internal first-floor partition wall was built using timbers felled in AD 1594, and first- and second-floor joists of the gatehouse use timbers felled in AD 1657/58; it is probable that the stairs also dates to this time. This site chronology includes a single sample from a bench spanning AD 1387 – AD 1453. The felling date of the timber cannot be determined, but is probably not before AD 1478. The second gatehouse chronology contains 108 rings spanning AD 1660 – AD 1767, this latter date being the felling date and representing later repairs.

A chronology of 171 rings, spanning AD 1400 – AD 1570, was made from material of the east wing of the main house. Samples within this site chronology retain complete sapwood giving felling dates of AD 1568 –70.

The roof of the stables, provided material for two site chronologies, The first, of 168 rings spanning AD 1646 – AD 1813, included two samples that retain complete sapwood. This indicates that the timbers used were felled late in AD 1813 or early in AD 1814. The second site chronology of 94 rings failed to date.

The roof of the laundry, which is to the south-east of the main house, also produced two site chronologies. The first of 101 rings did not date. The second, of 72 rings spanning the years AD 1682- AD 1753, gives an estimated felling date in the range AD 1762 – 87.

In addition to those samples taken from timbers of the Abbey buildings, samples from twenty-five living oak trees in the grounds of the Abbey were also analysed, these trees having been samples in December AD 1998. This resulted in the production of a single site chronology containing twenty samples and having 298 rings. Given that the date of the outer-most ring of the samples beneath the bark, where it is retained, is AD 1998, it is thus known that the first ring on the site chronology is AD 1701, although it does not cross-match with any reference chronologies.

Authors' addresses :-

R E Howard
UNIVERSITY OF NOTTINGHAM
University Park
Nottingham
NG7 2RD

Dr R R Laxton
UNIVERSITY OF NOTTINGHAM
University Park
Nottingham
NG7 2RD

Dr C D Litton
UNIVERSITY OF NOTTINGHAM
University Park
Nottingham
NG7 2RD

© Historic Buildings and Monuments Commission for England

TREE-RING ANALYSIS OF TIMBERS FROM THE BUILDINGS AND LIVINGTREES AT STONELEIGH ABBEY, STONELEIGH, WARWICKSHIRE

R E HOWARD
DR R R LAXTON
DR C D LITTON

TREE-RING ANALYSIS OF TIMBERS FROM THE BUILDINGS AND LIVING TREES AT STONELEIGH ABBEY, STONELEIGH, WARWICKSHIRE

Introduction: the Abbey buildings

Stoneleigh Abbey stands on the east bank of the River Avon just below its confluence with the River Sowe and about two miles south west of the village of Stoneleigh on the A444 Coventry to Leamington Spa trunk road (SP 317712; Fig 1). The site has its origins in the Cistercian Abbey founded here in AD 1156 in the reign of Henry II. The foundation, though never rich, was modestly prosperous and further building work on the site was undertaken in the thirteenth and fourteenth centuries. These works included a dorter, or dormitory, and a detached gatehouse. The gatehouse consists of an entrance way and adjoining coeval hospice to the east. Both parts have two storeys and an attic. Documentary sources indicate that this building was under construction, or almost complete, by AD 1346. This was in the time of Robert de Hockele, sixteenth Abbot of Stoneleigh. It is thought that the hospice was converted into a dwelling house in the early-seventeenth century.

At the dissolution in AD 1538 the Abbey was granted to Charles Brandon, Duke of Suffolk. Following his death it was sold in AD 1561 to two London merchants, Sir Rowland Hill and Sir Thomas Leigh. Leigh married Hill's niece and heiress, Alice Barker. On Sir Thomas' death in AD 1571 the house and estate passed to his second son, also named Thomas. It was from the dissolution onwards that the monastic buildings were first converted into a house, with most of the work probably being undertaken after AD 1571; the east wing and the old parts of the north wing are believed to date from this time. This late sixteenth-century rebuild incorporated some of the monastic elements including the dormitory undercroft, parts of the cloister and several twelfth-century arched doors and windows.

The west wing was built by Francis Smith of Warwick between AD 1714-26. This was one of his earlier big houses and possibly one of his finest. It is now an important example of the English Baroque style. The second-floor rooms of the west wing were redesigned, probably by the fifth Baron, in AD 1763-5. The interior of the west wing was largely destroyed by a major fire in AD 1960.

It is believed that the south wing is also from the AD 1760s, but it is irregular in style and difficult to assign with certainty. It is possible that the north end of the south wing was re-worked in the AD 1830s. It is known that C S Smith was commissioned to rework the north wing at this time and his work was completed by AD 1836. In AD 1851 a conservatory, designed by William Burn in the Classical style, was added to the south front of the house.

Apart from the monastic gatehouse, which is the largest surviving fragment of the monastic ranges, other detached buildings include the stables and the riding school. It is believed that these castellated, mock-Gothic structures were built in the AD 1820s to designs by C S Smith. A drawing by Smith of the riding school is dated to AD 1820, though one for the stables is dated AD 1814. The school and stables are of considerable size and are set round a large and attractive courtyard, entered by a high arched gateway beneath an imposing tower. The riding school contained a viewing gallery and stair turret. This whole complex was originally connected to the house by a covered walk-way. Only part of this now remains.

South and east of the house is a set of service buildings. These include what is now known as the laundry and the dairy. They are shown on the estate map of AD 1766, but not on the estate map of AD 1749. A general plan showing the position of the main parts of the Abbey buildings is shown in Figure 2.

Sampling and analysis by tree-ring dating of timbers from the Abbey buildings were commissioned by English Heritage, this being undertaken in conjunction with a historical research and archaeological survey. The purpose of tree-ring analysis was to assist with the dating and the phasing of the structural development of the building to inform a major programme of grant-aided repairs. Establishing the development of the site would provide information on the post-medieval development of the site from the fourteenth to seventeenth centuries as evidenced by structural changes made to the various elements of the house during this time. It was hoped that it might be possible to link the changes at the house to the historical phases.

Introduction: the living trees

The main house, the gatehouse, stables and the riding school etc, are all set in grounds originally landscaped by Humphrey Repton, who was engaged for this purpose in AD 1809. This early nineteenth-century work was remodeled at the end of the century, and then again by Percy Cane in the AD 1930s. Repton's early nineteenth-century work called for the development of woodlands in the grounds of Stoneleigh and large-scale planting of trees, particularly of oak trees, was undertaken at that time.

Dendrochronology, or tree-ring dating, relies on the cross-matching of growth-ring sequences from suitable samples of unknown date with relevant master or reference chronologies of known date. In this case "relevant" means that the master chronology is composed of dated samples from the same area as the samples of unknown date. When a sample is successfully cross-matched with a reference chronology the growth-span of the years of the sample can be determined. Where sufficient samples from a site or structure are obtained and dated some interpretation of the date of that structure may be made.

For example, where a number of timbers from a timber-framed building are dated, and those timbers provide samples with complete sapwood, the felling date of those timbers can be deduced from the date of the last growth-ring. Where the date of the last growth ring on several such samples is the same it can be inferred that all the dated timbers used in such a building were felled at the same time for use in that building. Understanding the methods of medieval and post-medieval carpenters and builders allows us to suggest that the actual construction of the building from which the samples were obtained took place very shortly after the timbers used in it were felled.

Where different amounts of sapwood are obtained, ie initially complete on a timber but partially lost in sampling, where incomplete with unknown loss, with the heartwood/sapwood boundary only, or even having no sapwood at all, calculations for a felling-date range of the timber may be made.

Thus, the dating of samples relies on obtaining suitable samples and having relevant reference chronologies with which to cross-match. Because growth-ring widths and their annual variations are in large measure determined by the weather during the growing season, it is likely that local and regional variations in weather or "micro-climates" will result in growth sequences which appertain to these local areas only. It thus appears reasonable to assume, and this appears to be borne out by practical experience, that each micro-climate is best served, in dendrochronological terms, by having reference patterns appertaining to it.

To be of full use reference or master chronologies should not only be spatially representative, but should also be temporally representative to cover all periods in which cross-matching and dating might be required. It is unusual to find individual reference chronologies that are both regionally representative and that have a long temporal span. Most regions of the country have a good collection of individually short reference chronologies but which collectively give a wide time range.

However, there are certain geographical areas and time periods that are less well represented than others. One such temporal/geographical area is Warwickshire and the West Country after the mid-seventeenth century.; there are very few chronologies for this area after about AD 1700. To remedy this, and to anchor the local chronologies in the modern period, it would be necessary to obtain samples from modern trees in the area to date a number of other buildings that contain samples spanning the late-seventeenth, eighteenth, and early-nineteenth centuries. To this end sampling was undertaken on living trees in the grounds of Stoneleigh Abbey.

The presence of these early nineteenth-century oak plantations, and the possibility that still older trees might also be present, prompted English Heritage to commission the sampling of a small number of living oak trees within the grounds of Stoneleigh Abbey.

The purpose of this sampling was to establish a reference chronology made up of modern Warwickshire material, anchored to the present at a known date, AD 1998. It was hoped that this modern material, with a span of rings dating back to the early-nineteenth century, would overlap with chronologies made up of material from the earlier timbers within the buildings at the Abbey. In this way a very long, continuous, and well replicated reference or master chronology might be produced which contained material having a wide temporal and geographic

relevance and application. Obtaining samples from modern living trees would also provide data on the number of sapwood rings such trees have. Such local data, it was hoped, would prove useful in refining the likely felling date range for timbers from Warwickshire.

Acknowledgements

The Laboratory would like to take this opportunity to thank the staff of Earnest Ireland, Construction Ltd, the contractors undertaking building work at Stoneleigh Abbey. Staff of Earnest Ireland were at all times extremely co-operative and very helpful in providing access, lights, and cables etc. Thanks are due in particular to Mr Andrew Jones and Mr Philip Carlisle. The Laboratory would also like to thank Shabab Seyfollahi, Project Co-ordinator from Stoneleigh Abbey Preservation Trust (1996) Ltd, for his considerable help in this project.

Thanks are also due to Rochelle Rowell for her considerable help in interpreting the gatehouse and assessing the timbers as to their possible phases. Rochelle Rowell produced and provided a number of drawings for the gatehouse upon which the sample locations were marked. Her work on the gatehouse formed part of her PhD dissertation (Rowell forthcoming).

The Laboratory would also like to take this opportunity to thank Dr Martin Bridge for his unstinting help and instruction in sampling living trees, and to thank Michael Worthington for his help also.

Areas of sampling

The Laboratory was asked to sample a number of different buildings, or portions of buildings, within the present Stoneleigh Abbey complex. This sampling was undertaken in two stages as work progressed and as additional timbers became available, or were discovered. In the first stage, in February AD 1998, twenty samples from the gatehouse roof and the gateway doors and ceilings were obtained. These samples were given the code STO-H, (for Stoneleigh site "H") and numbered 01-20. In the second stage, between March and October AD 1998, a further ninety samples were obtained from a wider range of locations. These samples were given the code STO-I, (for Stoneleigh site "I") and numbered 01-90. Because in some instances sampling was dependent on the progress of building works and the uncovering of timbers, sample numbers are not always in sequence. Samples from the Abbey buildings were obtained either using a normal corer driven by a power drill, or by taking slices from timbers that had been removed and discarded, or, as in the case of moved furniture, by the reading of exposed edges of timber panels with a graticule.

For the production of the chronology from modern material, two cores were taken from a total of twenty-five living trees in the parkland around Stoneleigh in December AD 1998. These samples, obtained by a hand-turned increment borer, were given the code STO-M, (for Stoneleigh "modern" samples) and numbered 01-25. The sampled trees were widely selected within the limits of those available in the park. These included very large trees standing alone, smaller trees standing in isolated parkland groups, and trees standing closer together in mixed woodland. The trees were selected from open flat areas, woodland edge, and sloping ground. The purpose of this was to obtain as wide a range of material as possible. There was no scientific statistical selection method applied, this was a random snatch sample.

The samples from the Abbey buildings and grounds are summarised overpage.

Gatehouse	gateway doors and ceiling	Samples STO-H01 – H10
	main roof	Samples STO-H11 – H20
	stairs	Samples STO-I66 – I71
	floor joists	Samples STO-I72 – I78 + I86/87
	partition wall	Samples STO-I79 – I85
	removed bench	Samples STO-I88 – I90
Stable	main roof	Samples STO-I01 – I34
Service area	laundry roof	Samples STO-I35 – I45
Main House	east wing roof	Samples STO-I46 – I65
Grounds	Living trees	Samples STO-M01 – M25

Having obtained all these samples analysis was undertaken in two parts. In the first part the samples were analysed as separate constituent groups; those of the stables in one group, those of the east wing in another, and so on. The sampling, analysis, and the conclusion for each constituent group is reported upon below.

In the second part of the analysis the site chronologies created for each constituent group were compared with each other and this is discussed later on in the report.

PART 1

Gatehouse: sampling – samples STO-H01 – 20 and STO-I66 – 90

Gateway doors and ceiling, and gatehouse main roof (samples STO-H01 – H20)

The entrance way contains double doors consisting of stiles and transoms with panels between (Fig 3). The east door has a wicket gate. The doors are hung on main posts with arch-braces running into a lintel, which is set just below the ceiling. The ceiling of the gateway contains a number of substantial close-laid joists (Fig 4). One of these has redundant mortises indicating that some timbers in this area have been moved.

The roof of the adjacent gatehouse contains seven very fine trusses (Fig 5) of quatrefoil form. These consist of principal rafters with struts from tiebeam to principal. Between each pair of trusses are wind-braces, also with struts, again carved as quatrefoils (Fig 6).

Sampling and analysis of timbers from the gateway doors and ceiling, and gatehouse main roof, was commissioned by English Heritage ahead of a programme of repairs. The purpose of dating was to determine as closely as possible the felling dates of the timbers used, to inform the process of repair being undertaken here at the time. Its purpose was also to establish whether or not the timbers of the gateway and its ceiling were of the same date as the gatehouse roof. Finally, sampling analysis was to establish, if possible, what date the timbers of the doors themselves might be.

A total of twenty oak timbers was sampled by coring. Ten samples, STO-H01 – H10, were obtained from timbers of the main posts of the gate, joists of the gateway ceiling, and timbers of the gateway doors. A further ten samples, STO-H11 – 20, were obtained from the roof timbers of the adjacent gatehouse. The positions of the cores from the gateway doors were recorded at the time of sampling on a sketch drawing, shown here as Figure 3. The positions of cores from the gateway ceiling and the gatehouse roof were also recorded at the time of sampling on drawings taken from architect's plans and provided by English Heritage. These are reproduced here

as Figures 4 – 7. The timbers of the gateway ceiling are numbered from north to south. The trusses of the gatehouse roof are numbered from west to east, following those on the architect's plans. Details of all samples are given in Table 1.

Stairs (samples STO-I66 – I71)

The Gatehouse contains a rather plain, though very fine, wooden newel staircase. The limited carving and the form of the bauble-top to the newel would suggest a mid seventeenth-century date for its construction. Sampling and analysis of the timbers of the stairs was commissioned by English Heritage as part of a programme of repairs. The purpose of this analysis was to determine as closely as possible the date of the timbers used and to establish whether the stair was inserted at the same time as a floor was put in. A further purpose of sampling was to provide possible seventeenth-century data for the construction of a long regional reference chronology for Warwickshire, an area that is quite poorly represented.

The six timbers available from these stairs were sampled by coring. There were no existing drawings available for this feature, and the positions of the cores were recorded at the time of sampling on a sketch diagram, reproduced here as Figure 8. Details of the samples are given in Table 1.

Floor joist (samples STO-I72 – I78 + I86/87)

At some time in the post-medieval period floors were inserted at ground- and first-floor levels. These floors consists of main beams from which run smaller floor-joists. The date of these floors was entirely unknown, and it was uncertain if the timber was all, or mostly, of one date or whether it contained a mixture of periods. Sampling and analysis of the floor joists was commissioned by English Heritage as part of a programme of repairs. The purpose of this was to determine the date of the floor and to establish whether it was coeval with the stair. A further purpose of sampling was to provide additional data for the construction of a long regional reference chronology.

A total of nine timbers was sampled. Seven samples, STO-I72 – I78, were obtained by coring. Two samples, STO-I86 and I87, were obtained by slicing lengths of joist removed during building works. Unfortunately, the exact positions of these last two timbers were not recorded, though it is known that they were obtained from the first floor. The positions of the other samples were recorded on plans provided, given here as Figures 9 and 10. Details of the samples are given in Table 1.

Partition wall (samples STO-I79 – I85)

Work at the gatehouse included the removal of dividing walls to enlarge certain rooms. In one first-floor room this work revealed an unsuspected timber-framed partition wall. The timbers were sampled to inform the progress of repairs and to establish, if possible, the likely construction date of this wall. It was hoped that the dating would place the wall in the general development of the building. The samples from the timbers would also provide data for a regional reference chronology.

Four samples were obtained by coring with a further three samples being obtained from timbers removed and discarded by the contractors. There was no existing drawing available for this feature, and the position of the four cores was recorded at the time of sampling on a sketch diagram, reproduced here as Figure 11. The exact original positions of the three sliced timbers was not recorded and thus the sample positions cannot be shown. Details of the samples are given in Table 1.

Removed bench (samples STO-I88 – I90)

A wooden bench, housed in a small recess to the rear of the gatehouse is made up of mullions and panels. While much of the timber was very wide-ringed, some of the panels were made of timber with extremely narrow growth-rings. It was believed possible that these were reused panels from a screen or some other feature of the twelfth-century abbey. Given the narrowness of the grain, it was believed possible that the timber might be of continental, possibly Baltic, origin. When the bench was taken apart prior to conservation, the opportunity was taken to obtain readings, using a graticule, of the ring-widths at the exposed panel edges. Three such readings were taken. A drawing of the bench before dismemberment does not exist and the positions of the sampled timbers is not known exactly. Details of samples are provided in Table 1.

Gatehouse: analysis

Gateway doors and ceiling, and gatehouse main roof (samples STO-H01 – H20)

The twenty samples obtained from the gateway doors and ceiling, and gatehouse main roof, in the first phase of sampling were analysed before other timbers from the gatehouse or elsewhere became available. These twenty samples were compared with each other by the Litton/Zainodin grouping procedure (see Appendix) and at a value of t=5.0 two groups of samples formed.

The fourteen samples of the first group, composed of samples from the main posts of the gate, the joists of the gateway ceiling, and from the gatehouse roof itself, cross-matched with each other at the off-sets shown in Figure 12. The ring-widths from these fourteen samples were combined at these relative offsets to form STOHSQ01, a site chronology of 223 rings.

Site chronology STOHSQ01 was successfully cross-matched with a series of relevant reference chronologies for oak, giving a first ring date of AD 1124 and a last measured ring date of AD 1346. Evidence for this dating is given by the t-values of Table 2. Site chronology STOHSQ01 was compared with the remaining ungrouped samples, but there was no further satisfactory cross- matching.

Within this chronology, samples from the gateway and its ceiling have an average last heartwood ring date of AD 1320. The usual 95% confidence limits for sapwood rings on mature oak trees from this part of England is in the range 15 to 40 sapwood rings. This would give the timbers represented by these samples an estimated felling date in the range AD 1335 – 60. The samples from the roof of the gatehouse proper within STOHSQ01 have an average last heartwood ring date of AD 1328. Using the same confidence limits as above would give the timbers represented by these samples an estimated felling date in the range AD 1343 – 68.

It is possible that the timbers for both parts of the building, the gateway and the gatehouse, were felled at the same time within the period of overlap of these felling date ranges, AD 1343 - 60. However, the staggering of the average last heartwood ring dates does suggest that the two sets of timbers were felled a few years apart.

The probability of two different felling dates is supported by the existence of complete sapwood on some of the timbers sampled and dated. Two samples within the site chronology, STO-H10 from the gateway, and STO-HI5 from the gatehouse roof, come from timbers with complete sapwood. Although in both cases small amounts of the sapwood were lost in coring, it is possible on the basis of observations and notes made at the time of sampling to make some estimate of the number of sapwood rings these losses represent.

On sample STO-H10 it is possible to estimate that the loss represents no more than 3 to 5 rings. This would indicate that the timber represented by this sample was felled in the range AD 1342 - 44. On sample STO-H15 only 2 - 3 rings were lost. This would give this timber a felling date of AD 1348 – 9.

The second group to form at t=5.0 by the Litton/Zainodin grouping procedure is composed of two samples from the doors of the gateway. These cross-match with each other at the off-set shown in Figure 13. The ring-widths

from these two samples were combined at this relative offset to form STOHSQ02, a site chronology of 134 rings.

Site chronology STOHSQ02 was successfully cross-matched with a series of relevant reference chronologies for oak, giving a first ring date of AD 1413 and a last measured ring date of AD 1546. Evidence for this dating is given by the *t*-values of Table 3.

Site chronology STOHSQ02 was compared with the remaining ungrouped samples. This indicated cross-matches with a further three samples at positions and off-sets as shown in the *t*-value/off-set matrix Figure 14 and bar diagram Figure 15. All three additional samples are from the timbers of the doors. These five samples were combined at these relative offset positions to form STOHSQ03, a site chronology of 142 rings. Site chronology STOHSQ03 was successfully cross-matched with a series of relevant reference chronologies for oak, giving a first ring date of AD 1405 and a last measured ring date of AD 1546. Evidence for this dating is given by the *t*-values of Table 4.

Only one sample in this site chronology, STO-HO6, has the heartwood/sapwood boundary. This is dated to AD 1546. Using the usual confidence limit for sapwood gives the timber represented by this sample an estimated felling date in the range AD 1561 – 86. It is probable, though not absolutely certain, that this represents the felling date range for all the timbers in this site chronology.

Bench, partition wall, stairs, and floor joists (samples STO-I66 – I90)

The twenty-five samples obtained from the other timbers in the gatehouse which had become available later were also analysed as a single group. These samples were compared with each other by the Litton/Zainodin grouping procedure and at a value of t=4.5 two groups of samples formed. The nineteen samples of the first group cross-matched with each other at relative off-set positions as seen in the bar diagram, Figure 16. The ring-widths from these nineteen samples were combined at these relative offsets to form STOISQ01, a site chronology of 272 rings.

Site chronology STOISQ01 was successfully cross-matched with a series of relevant reference chronologies for oak, giving a first ring date of AD 1387 and a last measured ring date of AD 1658. Evidence for this dating is given by the *t*-values of Table 5. Site chronology STOISQ01 was compared with the remaining ungrouped samples, but there was no further satisfactory cross-matching.

The bar diagram of Figure 16 shows this group of samples from the gatehouse split up into their constituent parts. This shows clearly that there are probably three phases of felling represented. The earliest phase may be represented by a timber of the moved bench that has a last measured ring date of AD 1453. This timber, however, does not have the heartwood/sapwood boundary. Its felling date, therefore, cannot be estimated, except to say that it is unlikely to be less than fifteen years after the last measured ring date, ie not before AD 1468.

The second phase of felling is represented by the first-floor partition wall timbers. Four samples from these timbers retain complete sapwood, and all have a last measured complete sapwood ring date of AD 1594. The third and final phase of felling is represented by the floor joists, and probably also by the stair timbers. Five samples from the floor joists retain complete sapwood. Two of these samples, STO-I86 and I87, have last complete sapwood ring dates of AD 1657, and three samples, STO-I78, I73, and I74, have last complete sapwood ring dates of AD 1658. Only one sample from the stair timbers, STO-I66, has any sapwood (14 rings), with a heartwood/sapwood transition date of AD 1638 and last ring date of AD 1652. Its felling is consistent with a felling date of AD 1657/8 obtained for the floor and so this analysis does not suggest a different felling date from that of the floor timbers. In practical constructional terms it seem highly probable, therefore, that the stair-way was put in at the same time as an upper floor.

The two samples of the second group from the gatehouse cross-matched with each other at the relative off-set position as seen in the bar diagram, Figure 17. The ring-widths from these two samples were combined at these relative offsets to form STOISQ02, a site chronology of 108 rings.

Site chronology STOISQ02 was successfully cross-matched with a series of relevant reference chronologies for oak, giving a first ring date of AD 1660 and a last measured ring date of AD 1767. Evidence for this dating is given by the *t*-values of Table 6, where it will be seen that the *t*-values at this date are not particularly high. One of the samples in this site chronology retains complete sapwood, and AD 1767 is thus the felling date of the timber represented. Given the high degree of cross-matching between the samples, *t*=25.5, it is highly likely that they are, in fact, timbers from the same tree. The fact that both samples are probably from the same tree, in effect being a single sample, and date to the eighteenth century, a period when there is relatively little relevant reference material, might explain the low *t*-values seen in Table 6. These timbers probably represent later repairs to the floor.

Gatehouse: conclusions

Gateway ceiling and gatehouse main roof

The sapwood on the samples from the Gatehouse suggest that it is probable that the timbers of the gateway and the gateway ceiling were felled between AD 1342 – 4. The timbers of the main roof of the gatehouse were probably felled a few years later, between AD 1348 – 9. Since this programme of tree-ring analysis and dating was completed this supposition has been strengthened by structural survey of the gatehouse, which shows that there was a change of plan during construction work, and that the gatehouse was added to the gateway while work was in progress. It is known that the gatehouse was under construction at the time of Robert de Hockele in AD 1346 (Rowell forthcoming).

Gateway doors

Only one sample from the timbers of the gateway doors has any sapwood, with a last measured ring date of AD 1546. The estimated felling date range for these timbers is in the range AD 1561 – 86. It is possible that this late sixteenth-century work was undertaken by the second Thomas Leigh who inherited the house in AD 1571. It is known that a substantial amount of work was undertaken on the house at this time.

Bench, partition wall, stairs, and floor joists

The earliest of the other samples from the gatehouse is that from the bench removed for conservation. This has a last measured ring date of AD 1453, but is without the heartwood/sapwood boundary. Its felling date, therefore, cannot be estimated, except to say that it is unlikely to be less than fifteen years after the last measured ring date, ie not before AD 1468. Because of the fine and narrow grain of the timber, it was believed possible that the panels of the bench might have been of Baltic origin. As the samples from the bench cross-match only with reference chronologies made up of British material it is seen that this is not the case, and that the source of the wood is local.

The second phase of felling in the later Gatehouse samples is represented by the first-floor partition wall timbers. Four samples from these timbers retain complete sapwood, and all have a last measured complete sapwood ring date of AD 1594. The context of this work is unknown, as was the very existence of the wall until building works began. The floor around this wall has been dated to AD 1658. Either the partition wall pre-dates the insertion of the seventeenth-century floor, in which case there must have been an earlier first floor, or the partition wall is made up of reused timbers, though this is unlikely as there was no evidence for this by way of redundant mortises etc.

The third and final phase of felling of the Gatehouse timbers is represented by the floor joists, and probably by the stair timbers as well. These samples have complete sapwood ring dates of AD 1657 and AD 1658. Only one sample from the stair has any sapwood, with a heartwood/sapwood transition date of AD 1638. This is consistent with a felling date of AD1657/8 obtained for the floor and in practical constructional terms it seem highly probable that a stair-way was put in at the same time as an upper floor. It is known that the gatehouse was

converted to domestic accommodation sometime around the mid-seventeenth century and the insertion of a new floor and stair appears an appropriate improvement.

Two samples, probably from timbers of the same tree, have a felling date of AD 1767. These must represent repairs to the floor.

Main House – East Wing roof: sampling - samples STO-I46 – I65

The roof of the East Wing is composed of principal rafter trusses, with tiebeams and collars, carrying butt-purlins, with common rafter frames in between. There are ten trusses forming nine bays. The construction date of this is uncertain but it is suspected to date to the late-sixteenth century, and it was believed possible that more than one phase of construction was represented. Sampling and analysis of the roof timbers was commissioned by English Heritage to establish the felling date of the timber used and to inform a programme of repair and development which will entail modifications to the trusses.

A total of twenty samples was obtained from these timbers. Eight samples were obtained from timbers of the principal rafter trusses, with a further twelve samples being obtained from the common rafters and other minor timbers. A plan of the main house showing the position of the east wing roof is provided in Figure 18. The location of the eight cores from the principal trusses was recorded at the time of sampling on plans provided by English Heritage, produced here as Figure 19. The position of the samples from the common rafters etc could not be shown on this plan with reasonable accuracy and no other plan or drawing was available. Details of the samples are given in Table 1 where the trusses and frames etc are numbered from north to south.

Main House – East Wing roof: analysis

The twenty samples of the roof of the East Wing of the main house were analysed as a separate group. These samples were compared with each other by the Litton/Zainodin grouping procedure. At a value of t=4.5 a single group of fifteen samples formed, cross-matching with each other at relative off-set positions as seen in the bar diagram, Figure 20. The ring-widths from these fifteen samples were combined at these relative offsets to form STOISQ03, a site chronology of 171 rings.

Site chronology STOISQ03 was successfully cross-matched with a series of relevant reference chronologies for oak, giving a first ring date of AD 1400 and a last measured ring date of AD 1570. Evidence for this dating is given by the t-values of Table 7. Site chronology STOISQ03 was compared with the remaining ungrouped samples, but there was no further satisfactory cross-matching.

Two samples in site chronology STOISQ03 from timbers of the east wing of the main house, STO-I53 and I62, retain complete sapwood, with last measured ring dates of AD 1568 and AD 1570 respectively. A third sample, STO-I52, is from a timber which had complete sapwood, but from which a small amount was lost in sampling. The amount of sapwood lost was noted and appears to be highly consistent with a felling date of AD 1568 – 70.

Main House – East Wing roof: conclusions

It would appear that the timbers used in the east wing of the main house were felled between AD 1568 and AD 1570. It would appear possible that work on this part of the house was commenced by the first Thomas Leigh and may have been largely concluded just as his son, the second Thomas Leigh, inherited the title in AD 1571.

Stables - main roof: sampling - samples STO-I01 – I34

This area consists not only of the stables proper but also of a gatehouse, a coach house, and the riding school, as shown in the general plan, Figure 21. Sampling of the gatehouse and coach house was not included in the English

Heritage brief, and although the riding school was to be sampled the timbers were of softwood and thus unsuitable for analysis.

The roof of the stables is composed of some 43 trusses, made up of tiebeams and king-posts with principal rafters A plan of the stable showing roof truss numbers given in Figure 22. Short struts run from near the bases of the king-posts, which are slightly shouldered at this point, to the rafters, about midway along their length. It is believed that the roof of the stables was built in AD 1814, on the basis of dated design drawings, but it is possible that they may be as late as AD 1820, when the riding school is known to have been built. The positions of the samples taken from the stable roof is shown in Figure 23a-f.

Sampling and analysis of the stable roof timbers was commissioned by English Heritage to establish the felling date of the timber used and demonstrate the integrity of the roof throughout its length, the better to inform a programme of repair. A further purpose of sampling was to provide extensive and well replicated late material for the creation of a local reference chronology.

Stables - main roof: analysis

The thirty-four samples of the stable roof were also analysed as a separate group, being compared with each other by the Litton/Zainodin grouping procedure. At a value of t=4.5 two groups of samples formed. The twenty-nine samples of the first group cross-matched with each other at relative off-set positions as seen in the bar diagram, Figure 24. The ring-widths from these twenty-nine samples were combined at these relative offsets to form STOISQ04, a site chronology of 168 rings.

Site chronology STOISQ04 was successfully cross-matched with a series of relevant reference chronologies for oak, giving a first ring date of AD 1646 and a last measured ring date of AD 1813. Evidence for this dating is given by the t-values of Table 8. Site chronology STOISQ04 was compared with the remaining ungrouped samples, but there was no further satisfactory cross- matching.

A number of samples in this site chronology retain complete sapwood. All such samples have last measured ring dates of AD 1813. The relative positions of the heartwood/sapwood boundaries where it exists on the other samples is highly consistent with this being the felling date for all the other timbers from the stable roof.

The three samples of the second group cross-matched with each other at relative off-set positions as seen in the bar diagram, Figure 25. The ring-widths from these three samples were combined at these relative offsets to form STOISQ05, a site chronology of 94 rings. Site chronology STOISQ05 was compared with a series of relevant reference chronologies for oak, but there was no satisfactory cross-matching and these samples must remain undated.

Stables - main roof: conclusions

A number of samples in the site chronology from the timbers of the Stables roof retain complete sapwood and have last measured ring dates of AD 1813. It seems highly likely that this work relates to the drawing or plans of the stables by C S Smith and dated AD 1814. Under the microscope it is possible to see on some of those samples with last sapwood growth-ring dates of AD 1813 that the summer cell growth for the year is fully complete. It is possible, therefore, that the trees from which these timbers came were felled late in that year or before the spring of AD 1814.

The undated site chronology from the Stables roof, STOISQ05, contains three samples and has 94 rings. Such a site chronology ought to be dateable. There appears to be no difficulty with the growth-rings apart from some complacency where the rings show little variation in the width of their growth from year to year. It is possible that this site chronology is undated because it has a very weak climatic signal. It is also possible that the timbers are from an area for which there is no reference material available with which the site chronology can cross-match.

Service area - laundry roof: sampling - samples STO-I35 – I45

The roof of the laundry is very similar to that of the stables, having tiebeams, king-posts with rafters, and short struts from king-post to rafters. The date of this roof is unknown, though it is believed to be after AD 1749, it not being shown on a map of that date, but before AD 1766 when it does appear on a map. The roof shows some sign of being altered. Whereas there is no clear evidence of reuse, there are no empty mortises for example, there do appear to be timbers that have been cut off and moved about. It is not certain that it is all of one phase. Drawings of this roof were not available at the time of sampling and the positions of the cores were recorded on a sketch diagram, reproduced here as Figure 26.

Sampling and analysis of this roof was commissioned by English Heritage. The purpose of this was to establish the felling date of the timber used, in order to refine a tentative typological framework for the dating of king-post roofs. Such information would inform the progress of an on-going programme of repairs and alterations. The samples would also provide data for a tree-ring reference chronology.

Service area - Laundry roof: analysis

The samples from the eleven available timbers of the Laundry roof were again analysed as a separate group, being compared with each other by the Litton/Zainodin grouping procedure. At a value of t=4.5 two groups of samples formed. The six samples of the first group cross-matched with each other at relative off-set positions as seen in the bar diagram, Figure 27. The ring-widths from these six were combined to form STOISQ06, a site chronology of 101 rings.

Site chronology STOISQ06 was compared with a series of relevant reference chronologies for oak, but there was no satisfactory cross-matching and these samples must remain undated.

The three samples of the second group cross-matched with each other at relative off-set positions as seen in the bar diagram, Figure 28. The ring-widths from these three were combined to form STOISQ07, a site chronology of 72 rings. Site chronology STOISQ07 was successfully cross-matched with a series of relevant reference chronologies for oak, giving a first ring date of AD 1682 and a last measured ring date of AD 1753. Evidence for this dating is given by the t-values of Table 9. Site chronology STOISQ07 was compared with the remaining ungrouped samples, but there was no further satisfactory cross-matching.

The average last heartwood ring date on the samples in this site chronology is AD 1747. Using the usual 95% confidence limits for sapwood on mature oak trees from this part of England of 15 to 40 rings would give the timbers represented by these samples an estimated felling date in the range AD 1762 – 87.

Service area - Laundry roof: conclusions

Although two satisfactory site chronologies were compiled from material of this area, only one of them has dated.

The three samples in the dated site chronology, STOISQ07, give an estimated felling date in the range AD 1762 – 87. This building is absent from an estate map of AD 1749, but is shown on a map of AD 1766. The tree-ring dating might suggest that it was only just complete when the map was made.

The undated site chronology from the Laundry roof, STOISQ06, contains six samples and has 101 rings. In theory such a site chronology should be dateable. There appears to be no problem with the samples that might make dating difficult apart from the growth-rings appearing to be slightly complacent and showing little variation from year to year. It is possible that the timbers from which the samples were taken are from an area that is not represented by any of the available reference chronologies.

Modern trees analysis

Samples were obtained from twenty-five trees set in the parkland around the Abbey buildings; the approximate location of the trees is shown in the map, Figure 29. Initially the samples were collected into large straws for transport to the laboratory where they were then mounted in moulded ramin architrave to make them easier to handle. Each core was prepared and the growth-ring widths were measured. The data of these measurements is given at the end of the report. It was noticeable that the rings of some of the trees were distorted and could not be measured with certainty, sample STO-M15 for example. In other cases only portions of the growth were distorted and these portions were ignored, as with samples STO-M03 and M16 for example.

In most cases the samples retained their bark and the rings were measured to this. On some this was missing, along with one or two rings, samples STO-M14 and M05 for example, or in some cases the outer rings could not be measured due to compaction, as on sample STO-M24 for example.

All twenty-five samples were compared with each other by the Litton/Zainodin grouping procedure. At a value of t=4.5 two groups of samples could be formed. The twenty samples of the first group cross-matched as shown in bar diagram Figure 30. The ring widths from these twenty samples were combined at these off-sets to form STOMSQ01, a site chronology of 298 rings. Site chronology STOMSQ01 was compared with a full range of reference chronologies, but there was no cross-matching.

A second site chronology consisting of three further samples might have been formed but the rings on these three appeared to be slightly stressed and distorted. Because of this problem, and because the site chronology did not cross-match with STOMSQ01 it was abandoned as unsatisfactory and is not reported upon here.

Modern trees conclusion

A single site chronology from the modern trees has been produced, though it has not been dated by cross-matching with any relevant modern reference chronology. There are in fact relatively few relevant reference chronologies with which it could be compared and this may explain the lack of dating for STOMSQ01. Figure 31 provides a bar diagram of the available relevant reference chronologies, showing their length and date spans in relation to each other.

Nevertheless, given that the relative position of the last measured complete sapwood ring on those samples where it exists is the same, and that the trees were sampled in December AD 1998, it is certain that this ring dates to AD 1998 in every case. Because site chronology STOMSQ01 has 298 rings, the date of the first ring can be calculated as being AD 1701.

On the basis of this fairly small number of modern trees, the sapwood estimate might appear to be wider than that used for ancient trees. The amount of sapwood on the modern trees varies from a minimum of 11, on sample STO-M03, to 50 sapwood rings on sample STO-M24. The average number of sapwood rings is 23. As indicated elsewhere, the usual 95% confidence limits for sapwood on mature oak trees from this part of England is in the range 15 to 40 sapwood rings.

PART 2

From the total of one hundred and thirty-five samples obtained from the Abbey buildings and living trees, ten site chronologies have been created containing a total of one hundred and sixteen samples. This figure represents a high grouping rate of 86%; the usual figure of samples grouped is normally between 60% - 70%. These ten site chronologies are sumarised as follows.

	Site chronology	Number of rings	Number of samples	Date span
Gatehouse – main roof and gateway ceiling	STOHSQ01	223	14	AD 1124 – AD 1346
Gatehouse – gateway doors	STOHSQ03	142	5	AD 1405 – AD 1546
Gatehouse – stairs, floor joists, partition wall, and removed bench	STOISQ01	272	19	AD 1387 – AD 1658
Gatehouse – floor joists	STOISQ02	108	2	AD 1660 – AD 1767
Main House – East Wing roof	STOISQ03	171	15	AD 1400 – AD 1570
Stable – main roof	STOISQ04	168	29	AD 1646 – AD 1813
Stable – main roof	STOISQ05	94	3	Undated
Service area – Laundry roof	STOISQ06	101	6	Undated
Service area – Laundry roof	STOISQ07	72	3	AD 1682 – AD 1753
Living trees	STOMSQ01	298	20	AD 1701 – AD 1998

Each site chronology was compared with all the others. While a number of these do not overlap in date with each other, and therefore do not cross-match, most of those which do share a common time span cross-matched with significant values at the expected relative off-sets. The value of the cross-matching between the overlapping site chronologies is shown below.

t-value/off-set matrix of cross-match between overlapping site chronologies

	HSQ03	ISQ01	ISQ03
HSQ03		-18	-5
ISQ01	6.9		13
ISQ03	8.2	15.1	

Off-sets above diagonals, *t*-values below diagonals

STOHSQ03, Gatehouse gateway doors, AD 1405 – AD 1546
STOISQ01, Gatehouse, stairs, floor joists, partition wall and bench, AD 1387 – AD 1658
STOISQ03, Main House East Wing roof, AD 1400 – AD 1570

	ISQ02	ISQ04	ISQ07
ISQ02		-14	22
ISQ04	5.2		36
ISQ07	2.6	5.7	

Off-sets above diagonals, *t*-values below diagonals

STOISQ02, Gatehouse floor joist (group 2), AD 1660 – AD 1767
STOISQ04, Stables main roof, AD 1646 – AD 1813
STOISQ07, Service area Laundry roof, AD 1682 – AD 1753

The relative off-set positions of the cross-matching between the site chronologies shown in the *t*-value/off-set matrixes above supports the dating of each site chronology against the reference chronologies.

The two undated site chronologies, STOISQ05 and STOISQ06, from the Stables and Laundry roof respectively, do not cross-match with any reference chronology, nor with each other. It is possible that the trees represented by these two groups of samples are each from different areas, neither of which is represented in the available reference chronologies.

The relative off-set positions of all eight dated site chronologies is shown in the bar diagram Figure 32. From this bar diagram it can be seen that the chronologies from Stoneleigh fall into three groups between which there is no overlap or insufficient overlap for satisfactory cross-matching. The first group is made up of a single chronology, STOHSQ01, which runs from AD 1124 to AD 1346. There is then a gap of 41 years between it and the next group of site chronologies, STOHSQ03, STOISQ01, and STOISQ03, which cover the period AD 1387 – AD 1658.

The next group of chronologies, STOISQ02, STOISQ04, and STOISQ07, starts in AD 1646, (on site chronology STOISQ04), and runs to AD 1813. There is thus only a twelve year overlap between these three and the three site chronologies discussed above, the latest date for these being AD 1658. Such a short overlap was considered insufficient to allow them to be combined to make a continuous chronology.

Overlapping in time with a number of these chronologies from the buildings is that composed of the twenty samples from the living trees. This site chronology has a first ring date of AD 1701 and ought to cross-match with at least two other site chronologies. The fact that it does not may suggest that the modern trees and those represented by the sampled timbers in the Abbey buildings have different, none-matching growth characteristic. This may be due to the modern trees having grown in a parkland setting, while the trees used for the timbers of the Abbey buildings may be from managed woodlands. The two different growth areas may produce different ring features.

Overall comments

The dating of material from Stoneleigh Abbey has given support to the documentary and structural evidence of a number of important buildings on this estate and helped resolve detailed questions raised by the current programme of works. The construction of these buildings can be closely associated with the history of the house known from documentary sources. The construction dates, as determined by tree-ring analysis, can be summarised as below:

Gateway roof and ceiling	AD 1342 – 4
Gatehouse roof	AD 1348 – 9
Gatehouse bench	After AD 1468

Gateway doors	AD 1561 – 86
Gatehouse first-floor partition	AD 1594
Gatehouse first-floor and stairs	AD 1568
Gatehouse floor repairs	AD 1767
East wing roof	AD 1570
Stables	AD 1814
Laundry	AD 1762 – 6

The data obtained has provided important material for the creation of a potentially long and well replicated local reference chronology which, unusually, is particularly well represented towards the more recent period. It is surprisingly difficult to obtain quality data after about AD 1750 and there is a paucity of useful reference chronologies in all areas at this time. This material goes a considerable way to remedying this problem.

However, there are still three weak spots in this material. One of these is in the early period, from AD 1346 to AD 1387, a second in the mid-seventeenth century, and a third in the early nineteenth century. It ought to be fairly easy to bridge these gaps with material from Warwickshire. This could be done by sampling a late seventeenth-century building, or buildings, containing timbers with rings that run back to the mid-sixteenth century and by obtaining samples that span the fourteenth-century gap.

Bibliography

Alcock, N W, Warwick University, Howard, R E, Laxton, R R, and Litton, C D, Nottingham University Tree-ring Dating Laboratory, and Miles, D H, 1989 List 31 no 9 - Leverhulme Cruck Project Results: 1988, *Vernacular Architect,* **20,** 43-5

Alcock, N W, Warwick University, Howard, R E, Laxton, R R, and Litton, C D, Nottingham University Tree-ring Dating Laboratory, and Miles, D H, 1990 List 35 no 8 - Leverhulme Cruck Project Results: 1989, *Vernacular Architect,* **21,** 42-4

Alcock, N W, Warwick University, Howard, R E, Laxton, R R, and Litton, C D, Nottingham University Tree-ring Dating Laboratory, and Miles, D H, 1991 List 41 nos 1, 6 - Leverhulme Cruck Project Results: 1990, *Vernacular Architect,* **22,** 45-7

Baillie, M G L, and Pilcher, J R, 1982 unpubl A Master Tree-Ring chronology for England, unpubl computer file *MGB-EOI,* Queens Univ, Belfast

Bridge, M, 1988 The Dendrochronological Dating of Buildings in Southern England, *Medieval Archaeol,* **32,** 166-74

Esling, J, Howard, R E, Laxton, R R, Litton, C D, and Simpson, W G, 1989 List 29 no 6a - Nottingham University Tree-Ring Dating Laboratory Results, *Vernacular Architect,* **20,** 39-41

Fletcher, J, 1978 unpubl computer file *MC10---H*, deceased

Howard, R E, Laxton, R R, Litton, C D, and Simpson, W G, 1988 The Old Manor House, Cubbington, Warwickshire, unpubl computer file *CUBASQ01,* Nottingham University Tree-Ring Dating Laboratory

Howard, R E, Laxton, R R, Litton, C D, and Simpson, W G, 1991 List 39 no 8 - Nottingham University Tree-Ring Dating Laboratory Results, *Vernacular Architect,* **22,** 40-3

Howard, R E, Laxton, R R, Litton, C D, and Simpson, W G, 1992 List 44 nos 1, 16, 19a/b - Nottingham University Tree-Ring Dating Laboratory Results, *Vernacular Architect,* **23,** 51-6

Howard, R E, Laxton, R R, Litton, C D, and Simpson, W G, 1992 Quenby Hall, Leicestershire, unpubl computer file *QBYHSQ02,* Nottingham University Tree-Ring Dating Laboratory

Howard, R E, Laxton, R R, Litton, C D, and Simpson, W G, 1994 List 57 nos 1, 5, 12 - Nottingham University Tree-Ring Dating Laboratory Results, *Vernacular Architect,* **25,** 36-40

Howard, R E, Laxton, R R, Litton, C D, and Simpson, W G, 1995 List 60 nos 2a, 16b - Nottingham University Tree-Ring Dating Laboratory Results, *Vernacular Architect,* **26,** 47-53

Howard, R E, Laxton, R R, Litton, C D, and Simpson, W G, 1996a List 65 no 6 - Nottingham University Tree-Ring Dating Laboratory Results, *Vernacular Architect,* **27,** 78-81

Howard, R E, Laxton, R R, and Litton, C D, 1996b List 68 no 5a - Nottingham University Tree-Ring Dating Laboratory: Sherwood Forest Oak; A Dendrochronological Survey, *Vernacular Architect,* **27,** 87-9

Howard, R E, Laxton, R R, and Litton, C D, Nottingham University, Morrison, A, Derbys CC, Sewell, J, Peak Park Joint Planning Board, and Hook, R, RCHME, 1997 List 76 no 4 - Nottingham University Tree-Ring Dating Laboratory Results: Derbyshire, Peak Park, and RCHME Dendrochronological Survey, 1995-96, *Vernacular Architect,* **28,** 128-9

Howard, R E, Laxton, R R, and Litton, C D, forthcoming - Nottingham University Tree-Ring Dating Laboratory: Dendrochronological Dating for English Heritage, *Vernacular Architect*

Laxton, R R, Litton, C D, Simpson, W G, and Whitley, P J, 1982 Table 1, no 2 - Nottingham University Tree-Ring Dating Laboratory: Tree-ring Dates for Some East Midland Buildings, *Trans Thoroton Soc Nottinghamshire*, **136**, 74-8

Laxton, R R, Litton, C D, and Simpson, W G, 1984 List 12 nos 10, 23 - Nottingham University Tree-Ring Dating Laboratory Results, *Vernacular Architect,* **15,** 65-8

Laxton, R R, and Litton, C D, 1988 An East Midlands Master Tree-ring chronology and its use for dating vernacular buildings, University of Nottingham, Dept of Classical & Archaeol Studies, Monograph Series, **III**

Rowell, R, forthcoming, The Archaeology of Late Medieval Hospitality, unpubl PhD thesis, Univ York

Siebenlist-Kerner, V, 1978 Chronology, 1341-1636, for hillside oaks from Western England and Wales, in *Dendrochronology in Europe* (ed J M Fletcher), BAR Int Ser, **51**, 295-301

Tyers, I, 1997 London, unpubl computer file *LOND1175,* Sheffield Univ

Table 1: Details of tree-ring samples from Stoneleigh Abbey, Stoneleigh, Warwickshire

Sample no.	Sample location	Total rings	Sapwood rings*	First measured ring date	Last heartwood ring date	Last measured ring date
	Gatehouse, gateway doors and gateway ceiling					
STO-H01	Central rail, east door	95	no h/s	AD 1425	------	1519
STO-H02	Lower centre post, east gate	99	no h/s	AD 1405	------	1503
STO-H03	Jamb to wicket gate, east door	96	no h/s	AD 1413	------	1508
STO-H04	Jamb to west door	83	no h/s	AD 1421	------	1503
STO-H05	Main post to west door	153	h/s	AD 1161	1313	1313
STO-H06	Doorway top-beam	126	h/s	AD 1421	1546	1546
STO-H07	Main post to east door	132	h/s	AD 1189	1320	1320
STO-H08	Ceiling joist no 3 from north	143	h/s	AD 1175	1317	1317
STO-H09	Ceiling joist no 4 from north	141	1	AD 1189	1327	1328
STO-H10	Ceiling joist no 5 from north	121	17c	AD 1219	1322	1339
	Gatehouse roof					
STO-H11	East windbrace from south principal rafter, truss 1	123	h/s	AD 1205	1327	1327
STO-H12	North strut from collar to principal rafter, truss 2	83	h/s	AD 1240	1322	1322
STO-H13	Strut to west windbrace of north principal rafter, truss 2	128	no h/s	AD 1180	------	1307
STO-H14	West windbrace from south principal rafter, truss 3	110	no h/s	AD 1196	------	1305
STO-H15	South strut from collar to principal rafter, truss 4	77	15c	AD 1270	1331	1346
STO-H16	West windbrace from south principal rafter, truss 4	121	no h/s	AD 1169	------	1289
STO-H17	South strut from collar to principal rafter, truss 5	111	h/s	AD 1206	1316	1316
STO-H18	Collar, truss 6	66	no h/s	------	------	------
STO-H19	Collar, truss 4	133	no h/s	AD 1124	------	1256
STO-H20	North strut from collar to principal rafter, truss 4	75	h/s	AD 1256	1330	1330

Table 1: Continued

Sample no.	Sample location	Total rings	*Sapwood rings	First measured ring date	Last heartwood ring date	Last measured ring date
	Stable roof					
STO-I01	South strut, truss 29	119	h/s	AD 1664	1782	1782
STO-I02	South rafter, truss 29	100	h/s	AD 1682	1781	1781
STO-I03	King post, truss 30	110	h/s	AD 1680	1789	1789
STO-I04	North strut, truss 30	82	11	AD 1718	1788	1799
STO-I05	South strut, truss 30	114	h/s	AD 1676	1789	1789
STO-I06	South rafter, truss 30	115	6	AD 1677	1785	1791
STO-I07	King post, truss 32	98	5	AD 1695	1787	1792
STO-I08	South rafter, truss 32	86	27C	AD 1728	1786	1813
STO-I09	King post, truss 33	86	h/s	AD 1698	1783	1783
STO-I10	King post, truss 34	143	h/s	AD 1646	1788	1788
STO-I11	King post, truss 35	161	26C	AD 1653	1787	1813
STO-I12	North strut, truss 35	107	35C	AD 1706	1777	1812
STO-I13	Tiebeam, truss 35	106	25C	AD 1708	1788	1813
STO-I14	South strut, truss 35	92	h/s	AD 1690	1781	1781
STO-I15	King post, truss 36	81	h/s	AD 1707	1787	1787
STO-I16	North rafter, truss 37	54	h/s	AD 1729	1782	1782
STO-I17	King post, truss 41	135	h/s	AD 1648	1782	1782
STO-I18	North strut, truss 41	96	h/s	AD 1687	1782	1782
STO-I19	King post, truss 42	133	10	AD 1668	1790	1800
STO-I20	North strut, truss 42	54	35C	------	------	------
STO-I21	King post, truss 43	79	4	AD 1717	1791	1795
STO-I22	King post, truss 18	87	no h/s	AD 1681	------	1767
STO-I23	South rafter, truss 17	83	15	------	------	------
STO-I24	King post, truss 17	76	h/s	------	------	------
STO-I25	North strut, truss 16	84	9	------	------	------
STO-I26	King post, truss 13	85	7	AD 1721	1798	1805
STO-I27	North strut, truss 12	59	h/s	AD 1727	1785	1785
STO-I28	King post, truss 10	76	h/s	AD 1719	1794	1794
STO-I29	South strut, truss 9	54	h/s	AD 1731	1784	1784
STO-I30	South rafter, truss 7	89	6	------	------	------
STO-I31	King post, truss 9	117	11	AD 1688	1793	1804

Table 1: Continued

Sample no.	Sample location	Total rings	*Sapwood rings	First measured ring date	Last heartwood ring date	Last measured ring date
	Stable roof					
STO-I32	North strut, truss 4	84	no h/s	AD 1676	------	1759
STO-I33	South strut, truss 5	95	h/s	AD 1688	1782	1782
STO-I34	South rafter, truss 6	113	19	AD 1696	1789	1808
	Laundry roof					
STO-I35	North principal rafter, truss 1	101	16C	------	----	------
STO-I36	North principal rafter, truss 2	59	3	------	----	------
STO-I37	South principal rafter, truss 2	71	18C	------	----	------
STO-I38	North principal rafter, truss 3	83	2	------	----	------
STO-I39	South principal rafter, truss 3	66	no h/s	------	----	------
STO-I40	Tiebeam, truss 3	57	20C	------	----	------
STO-I41	North lower purlin, truss 2-3	71	4	AD 1682	1748	1752
STO-I42	Upper purlin to west hip	62	7	AD 1692	1746	1753
STO-I43	South joist, bay 2	54	h/s	AD 1693	1746	1646
STO-I44	Common rafter	50	h/s	------	----	------
STO-I45	Common rafter	68	2	------	----	------
	East wing roof (principal trusses)					
STO-I46	West principal rafter, truss 3	90	no h/s	AD 1401	------	1490
STO-I47	Ridge beam, truss 4 – 5	96	h/s	AD 1453	1548	1548
STO-I48	West principal rafter, truss 4	54	5	------	----	------
STO-I49	East principal rafter, truss 4	54	10	------	----	------
STO-I50	East lower purlin, truss 4 – 5	75	no h/s	------	----	------
STO-I51	West principal rafter, truss 2	160	16c	AD 1400	1543	1559
STO-I52	East principal rafter, truss 2	130	no h/s	AD 1407	------	1536
STO-I53	Ridge beam, truss 3 – 4	103	28C	AD 1468	1542	1570

Table 1: Continued

Sample no.	Sample location	Total rings	*Sapwood rings	First measured ring date	Last heartwood ring date	Last measured ring date
	East wing roof (common rafter trusses)					
STO-I54	East common rafter, frame 7	89	no h/s	AD 1435	------	1523
STO-I55	East common rafter, frame 8	75	no h/s	AD 1409	------	1483
STO-I56	West common rafter, frame 9	63	no h/s	AD 1415	------	1477
STO-I57	East common rafter, frame 10	64	no h/s	AD 1463	------	1526
STO-I58	West common rafter, frame 1	99	19C	------	------	------
STO-I59	East common rafter, frame 3	68	no h/s	AD 1436	------	1503
STO-I60	West common rafter, frame 15	107	no h/s	AD 1422	------	1528
STO-I61	East common rafter, frame 15	88	no h/s	------	------	------
STO-I62	East common rafter, frame 16	74	20C	AD 1495	1548	1568
STO-I63	East common rafter, frame 5	60	no h/s	AD 1474	------	1533
STO-I64	West common rafter, frame 18	116	h/s	AD 1423	1538	1538
STO-I65	West common rafter, frame 19	61	no h/s	AD 1464	------	1524
	Gatehouse stairs					
STO-I66	Top newel post	97	14	AD 1556	1638	1652
STO-I67	Top sill-beam or plate	149	no h/s	AD 1481	------	1629
STO-I68	Newel post 3	88	no h/s	AD 1541	------	1628
STO-I69	Hanging rail	164	no h/s	AD 1401	------	1564
STO-I70	Beam below newel post 3	129	no h/s	AD 1410	------	1538
STO-I71	Newel post 4	66	no h/s	AD 1547	------	1612
	Gatehouse floor joists					
STO-I72	Ground-floor joist 8 south	85	15C	AD 1683	1752	1767
STO-I73	Ground-floor joist 6 north	111	21C	AD 1548	1637	1658
STO-I74	Ground-floor joist 5 south	107	24C	AD 1552	1634	1658
STO-I75	First-floor joist 4 south	147	no h/s	AD 1432	------	1578

Table 1: Continued

Sample no.	Sample location	Total rings	*Sapwood rings	First measured ring date	Last heartwood ring date	Last measured ring date
	Gatehouse floor joists					
STO-I76	Ground-floor joist 1 north	92	4	------	------	------
STO-I77	First-floor joist 3 north	101	8	AD 1660	1752	1760
STO-I78	First-floor joist 6 north	145	31C	AD 1514	1627	1658
	Gatehouse partition wall					
STO-I79	Upper south cross-rail	147	no h/s	AD 1408	------	1554
STO-I80	Main post to south side	97	20C	AD 1498	1574	1594
STO-I81	South door-jamb	104	h/s	------	------	------
STO-I82	North door-jamb	86	28C	AD 1509	1566	1594
STO-I83	Timber 8	95	no h/s	AD 1398	------	1492
STO-I84	Timber 2	138	11C	AD 1457	1583	1594
STO-I85	Timber 1	81	18C	AD 1514	1576	1594
	Gatehouse floor joists (first-floor joists)					
STO-I86	First floor joist, uncertain origin	82	28C	AD 1576	1629	1657
STO-I87	First floor joist, uncertain origin	67	25C	AD 1591	1632	1657
	Removed Gatehouse bench					
STO-I88	Back panel 1	200	no h/s	------	------	------
STO-I89	Back panel 2	67	no h/s	AD 1387	------	1453
STO-I90	Back panel 3	76	no h/s	------	------	------

Table 1 Continued

Sample no.	Sample location	Total rings	*Sapwood rings	First measured ring date	Last heartwood ring date	Last measured ring date
STO-M01	Modern tree	80	19C	------	------	------
STO-M02	Modern tree	127	14C	AD 1872	1984	1998
STO-M03	Modern tree	74	11C	AD 1925	1987	1998
STO-M04	Modern tree	144	18C	AD 1855	1980	1998
STO-M05	Modern tree	210	30C	AD 1788	1967	1998
STO-M06	Modern tree	210	34c	AD 1788	1963	1997
STO-M07	Modern tree	219	23C	AD 1780	1975	1997
STO-M08	Modern tree	168	15C	AD 1831	1983	1998
STO-M09	Modern tree	172	22C	AD 1827	1976	1998
STO-M10	Modern tree	171	19C	AD 1828	1979	1998
STO-M11	Modern tree	164	19C	AD 1835	1979	1998
STO-M12	Modern tree	154	17C	AD 1844	1981	1998
STO-M13	Modern tree	176	25C	AD 1823	1973	1998
STO-M14	Modern tree	129	21c	AD 1869	1976	1997
STO-M15	Modern tree	303	32C	------	------	------
STO-M16	Modern tree	112	36C	AD 1887	1962	1998
STO-M17	Modern tree	298	18C	AD 1701	1980	1998
STO-M18	Modern tree	191	20c	AD 1805	1975	1998
STO-M19	Modern tree	189	23C	AD 1810	1975	1998
STO-M20	Modern tree	197	20C	AD 1802	1978	1998
STO-M21	Modern tree	140	26C	------	------	------
STO-M22	Modern tree	110	30C	------	------	------
STO-M23	Modern tree	182	25C	------	------	------
STO-M24	Modern tree	271	50c	AD 1714	1934	1998
STO-M25	Modern tree	162	18C	AD 1836	1979	1998

*h/s = the heartwood/sapwood boundary is the last ring on sample
c = complete sapwood on timber, part lost in sampling or not possible to measure to last ring
C = complete sapwood is retained on the sample

Table 8: Results of the cross-matching of site chronology STOISQ04 (Stable roof group 1) and relevant reference chronologies when first ring date is AD 1646 and last ring date is AD 1813

Reference Chronology	Span of chronology	t-value	
East Midlands	AD 882 – 1981	11.2	(Laxton and Litton 1988)
England	AD 401 – 1981	3.9	(Baillie and Pilcher 1982 unpubl)
Green's Mill, Sneinton, Nottm	AD 1664 – 1787	9.7	(Laxton *et al* 1982)
Bradgate Park, Leics	AD 1595 – 1975	11.2	(Laxton and Litton 1988)
Worcester Cathedral,Nave roof	AD 1597 – 1730	6.5	(Howard *et al* 1995)
Southwell Minster, Notts	AD 1573 – 1716	7.9	(Howard *et al* 1996b)
Quenby Hall, Leics	AD 1648 – 1765	9.9	(Howard *et al* 1992 unpubl)
Burghley House, Cambs	AD 1686 – 1809	7.3	(Howard *et al* 1992)
Chicksands Priory, Herts	AD 1670 – 1814	7.6	(Howard *et al* forthcoming)

Table 9: Results of the cross-matching of site chronology STOISQ07 (Laundry roof, group 2) and relevant reference chronologies when first ring date is AD 1682 and last ring date is AD 1753

East Midlands	AD 882 – 1981	5.9	(Laxton and Litton 1988)
England	AD 401 – 1981	6.3	(Baillie and Pilcher 1982 unpubl)
Green's Mill, Nottm	AD 1664 – 1787	4.5	(Laxton *et al* 1982)
Quenby Hall, Leics	AD 1648 – 1765	4.1	(Howard *et al* 1992 unpubl)
Burghley House, Cambs	AD 1686 – 1809	5.6	(Howard *et al* 1992)
Worcester Cathedral (Nave roof)	AD 1597 – 1730	4.7	(Howard *et al* 1995)
Tanworth-in-Arden, Warwicks	AD 1675 – 1754	6.3	(Howard *et al* 1994)

Table 2: Results of the cross-matching of site chronology STOHSQ01 (Gatehouse roof, gateway doors and ceiling) and relevant reference chronologies when first ring date is AD 1124 and last ring date is AD 1346

Reference Chronology	Span of chronology	*t*-value	
East Midlands	AD 882 - 1981	10.5	(Laxton and Litton 1988)
British Isles	AD 401 - 1981	8.4	(Baillie and Pilcher 1982 unpubl)
Southern England	AD 1083 - 1589	9.5	(Bridge 1988)
Headstone Manor, Middx	AD 1234 - 1305	7.0	(Howard *et al* 1996a)
Chichester Cathedral	AD 1173 - 1295	8.2	(Howard *et al* 1992)
Quaintree House, Leics	AD 1165 - 1305	7.2	(Alcock *et al* 1991)
Manor House, Burton-on-Trent, Staffs	AD 1162 - 1339	6.3	(Howard *et al* forthcoming)
The Old Manor House, Cubbington, Warwicks	AD 1170 - 1312	10.1	(Howard *et al* 1988 unpubl)

Table 3: Results of the cross-matching of site chronology STOHSQ02 (gateway doors) and relevant reference chronologies when first ring date is AD 1413 and last ring date is AD 1546

East Midlands	AD 882 – 1981	5.5	(Laxton and Litton 1988)
British Isles	AD 401 – 1981	2.4	(Baillie and Pilcher 1982 unpubl)
Southern England	AD 1083 – 1589	4.8	(Bridge 1988)
LOND1175	AD 413 – 1728	5.4	(Tyers 1997 unpubl)
Thatched Cottage, Hill Wooton, Warwicks	AD 1392 – 1469	4.4	(Alcock *et al* 1989)
Tamworth Castle, Staffs	AD 1445 – 1567	5.3	(Laxton *et al* 1984)
Tusmore Park, Oxon	AD 1359 – 1545	4.6	(Howard *et al* 1992)
Pye Corner, Moulsford, Oxon	AD 1340 – 1558	4.9	(Alcock *et al* 1991)
Castle Donington, Leics	AD 1428 – 1553	3.9	(Alcock *et al* 1990)

Table 4: Results of the cross-matching of site chronology STOHSQ03 (gateway doors) and relevant reference chronologies when first ring date is AD 1405 and last ring date is AD 1546

East Midlands	AD 882 – 1981	6.8	(Laxton and Litton 1988)
British Isles	AD 401 – 1981	3.4	(Baillie and Pilcher 1982 unpubl)
Southern England	AD 1083 – 1589	5.0	(Bridge 1988)
LOND1175	AD 413 – 1728	5.6	(Tyers 1997 unpubl)
Thatched Cottage, Hill Wooton, Warwicks	AD 1392 – 1469	4.7	(Alcock *et al* 1989)
Tamworth Castle, Staffs	AD 1445 – 1567	5.4	(Laxton *et al* 1984)
Tusmore Park, Oxon	AD 1359 – 1545	5.4	(Howard *et al* 1992)
Pye Corner, Moulsford, Oxon	AD 1340 – 1558	4.6	(Alcock *et al* 1991)
Castle Donington, Leics	AD 1428 – 1553	4.9	(Alcock *et al* 1990)

Table 5: Results of the cross-matching of site chronology STOISQ01 (Gatehouse bench, partition wall, stair, and floor joists) and relevant reference chronologies when first ring date is AD 1387 and last ring date is AD 1658

Reference Chronology	Span of chronology	*t*-value	
East Midlands	AD 882 – 1981	11.4	(Laxton and Litton 1988)
England	AD 401 – 1981	8.0	(Baillie and Pilcher 1982 unpubl)
Wales and West Midlands	AD 1341 – 1636	8.5	(Siebenlist-Kerner 1978)
MC10---H	AD 1386 – 1585	5.7	(Fletcher 1978 unpubl)
Gotham Manor, Notts	AD 1391 – 1590	9.0	(Howard *et al* 1991)
Lodge Park, Aldsworth, Glos	AD 1324 – 1587	8.9	(Howard *et al* 1995)
Hagworthingham Church, Lincs	AD 1336 – 1533	6.4	(Laxton *et al* 1984)
Tamworth Castle, Staffs	AD 1445 – 1567	7.4	(Laxton *et al* 1984)
26 Westgate St, Gloucester	AD 1399 – 1622	6.9	(Howard *et al* forthcoming)
Shardlow, Derbys	AD 1437 – 1616	7.8	(Howard *et al* 1994)
Donington-le-Heath, Leics	AD 1411 – 1618	7.6	(Esling *et al* 1989)

Table 6: Results of the cross-matching of site chronology STOISQ02 (Gatehouse joists group 2) and relevant reference chronologies when first ring date is AD 1660 and last ring date is AD 1767

East Midlands	AD 882 – 1981	3.8	(Laxton and Litton 1988)
England	AD 401 – 1981	3.7	(Baillie and Pilcher 1982 unpubl)
Quenby Hall, Leics	AD 1648 – 1765	4.9	(Howard *et al* 1992 unpubl)
Sutton in Ashfield, Notts	AD 1495 – 1766	4.4	(Howard *et al* 1994)
Burghley House, Cambs	AD 1686 – 1809	4.3	(Howard *et al* 1992)

Table 7: Results of the cross-matching of site chronology STOISQ03 (East Wing roof) and relevant reference chronologies when first ring date is AD 1400 and last ring date is AD 1570

East Midlands	AD 882 – 1981	10.1	(Laxton and Litton 1988)
England	AD 401 – 1981	6.5	(Baillie and Pilcher 1982 unpubl)
Wales and West Midlands	AD 1341 – 1636	6.9	(Siebenlist-Kerner 1978)
MC10---H	AD 1386 – 1585	6.3	(Fletcher 1978 unpubl)
Gotham Manor, Notts	AD 1391 – 1590	7.5	(Howard *et al* 1991)
Lodge Park, Aldsworth, Glos	AD 1324 – 1587	7.5	(Howard *et al* 1995)
Hagworthingham Church, Lincs	AD 1336 – 1533	7.1	(Laxton *et al* 1984)
Tamworth Castle, Staffs	AD 1445 – 1567	7.0	(Laxton *et al* 1984)
26 Westgate St, Gloucester	AD 1399 – 1622	6.9	(Howard *et al* forthcoming)
Tusmore Park, Oxon	AD 1359 – 1545	6.6	(Howard *et al* 1992)
Melbourne, Derbys	AD 1372 – 1530	6.3	(Howard *et al* 1997)

Figure 1: Map to show general location of Stoneleigh Abbey

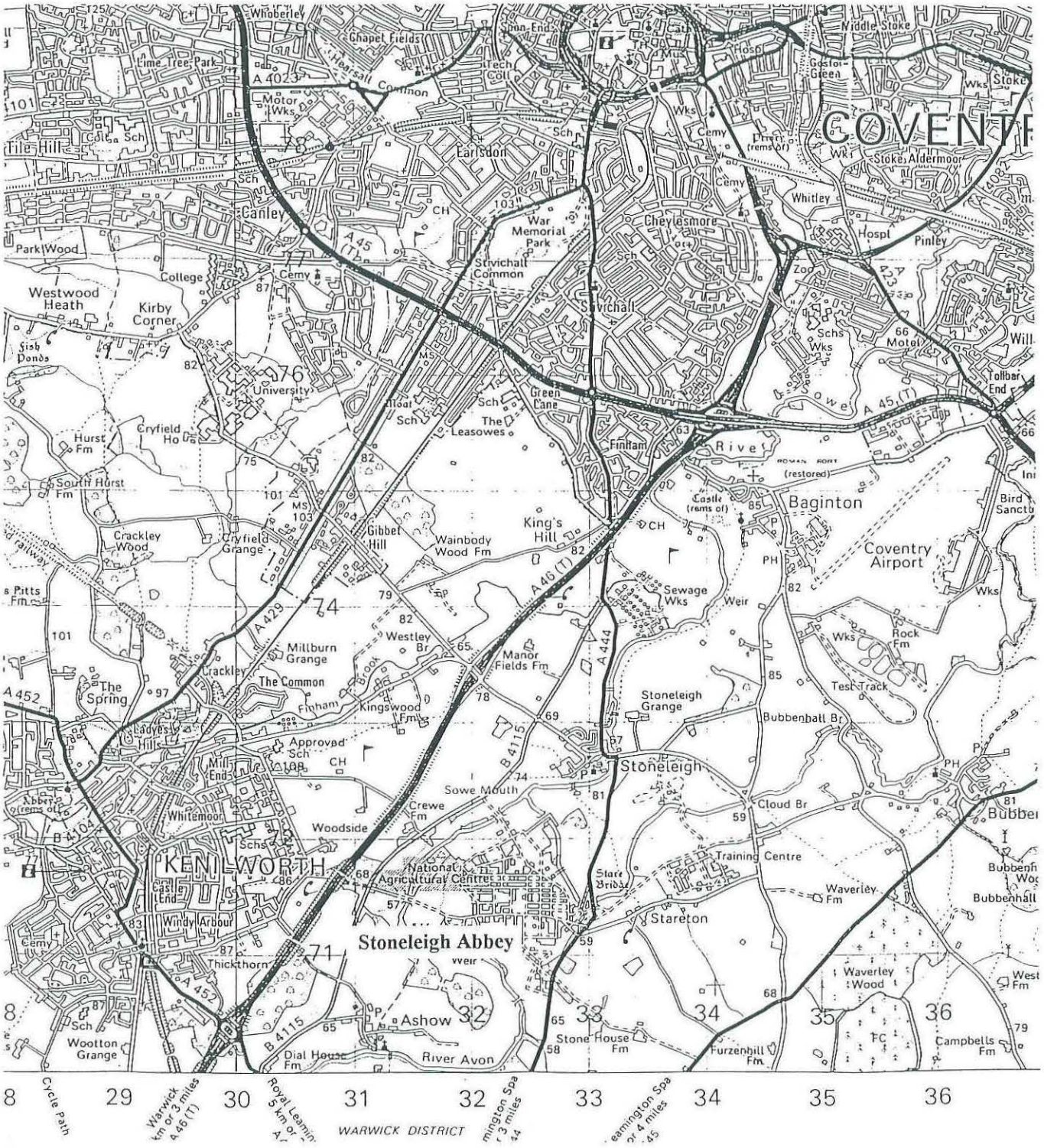

(based upon the Ordnanace Survey 1:50000 map with the permission of The Controller of Her Majesty's Stationery Office, ©Crown Copyright).

Figure 2: Plan to show the layout of buildings at Stoneleigh Abbey

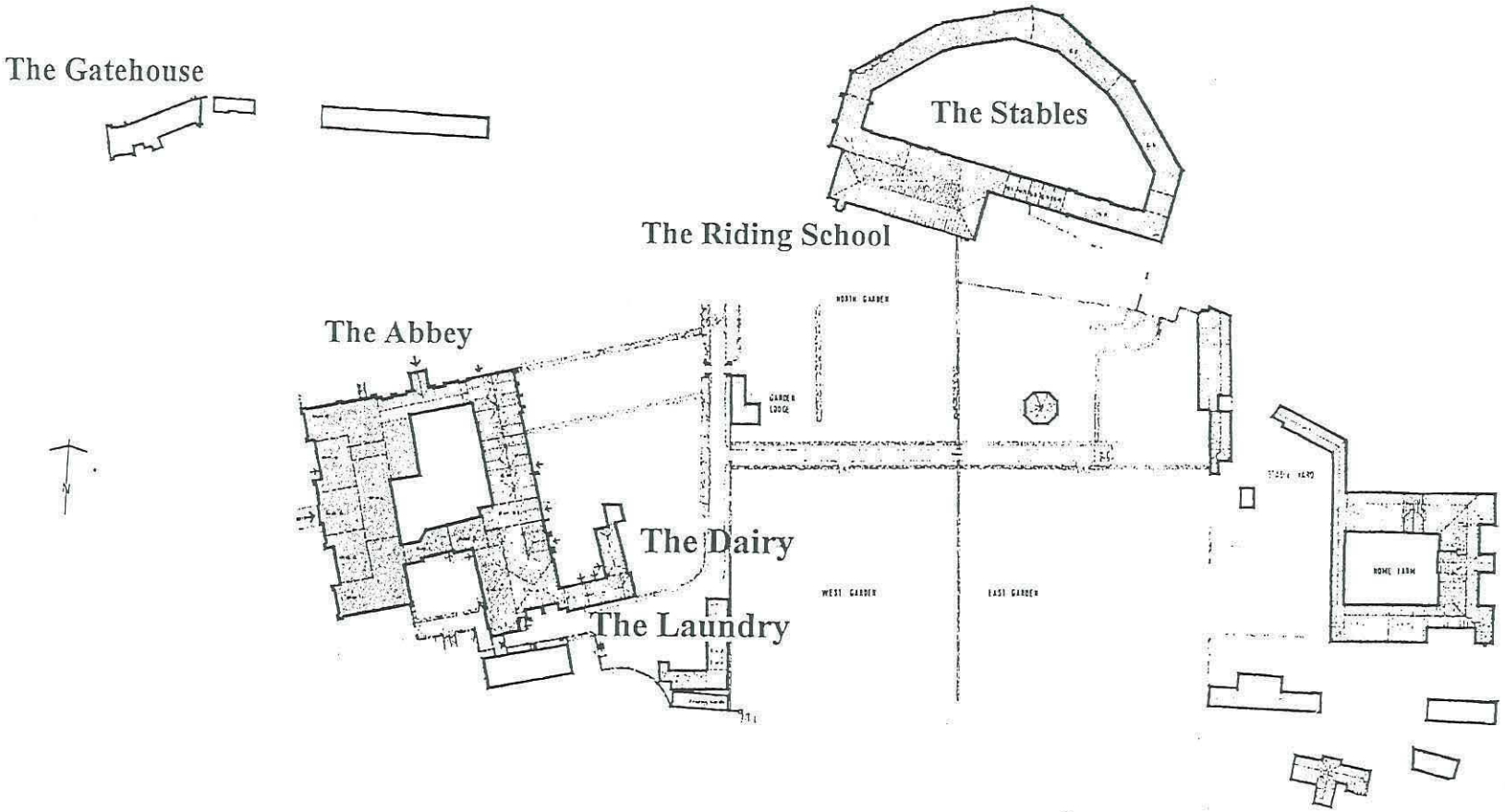

Figure 3: Sketch to show the positions of samples from the doors of the gatehouse

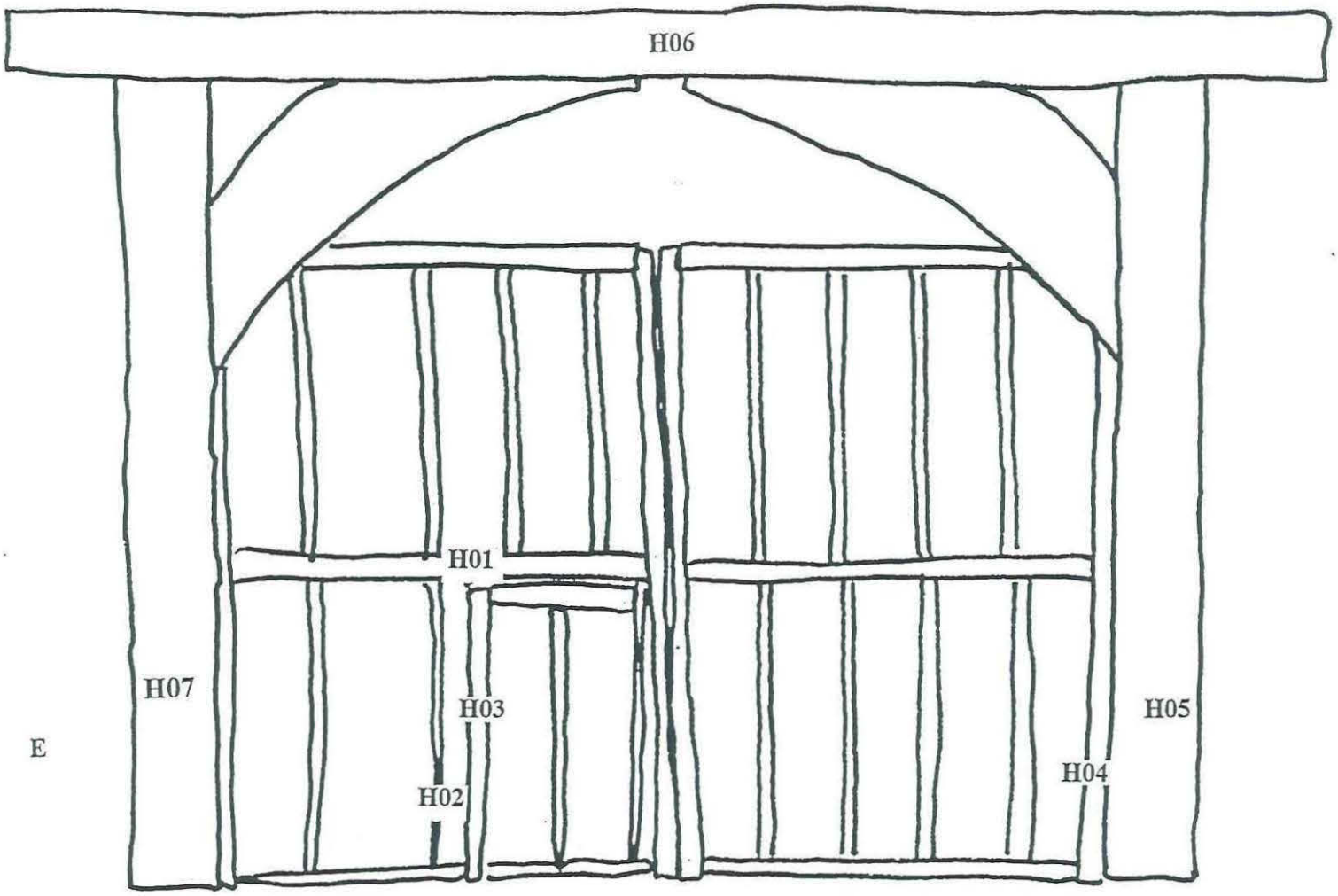

Figure 4: Plan to show positions of samples from the gateway ceiling

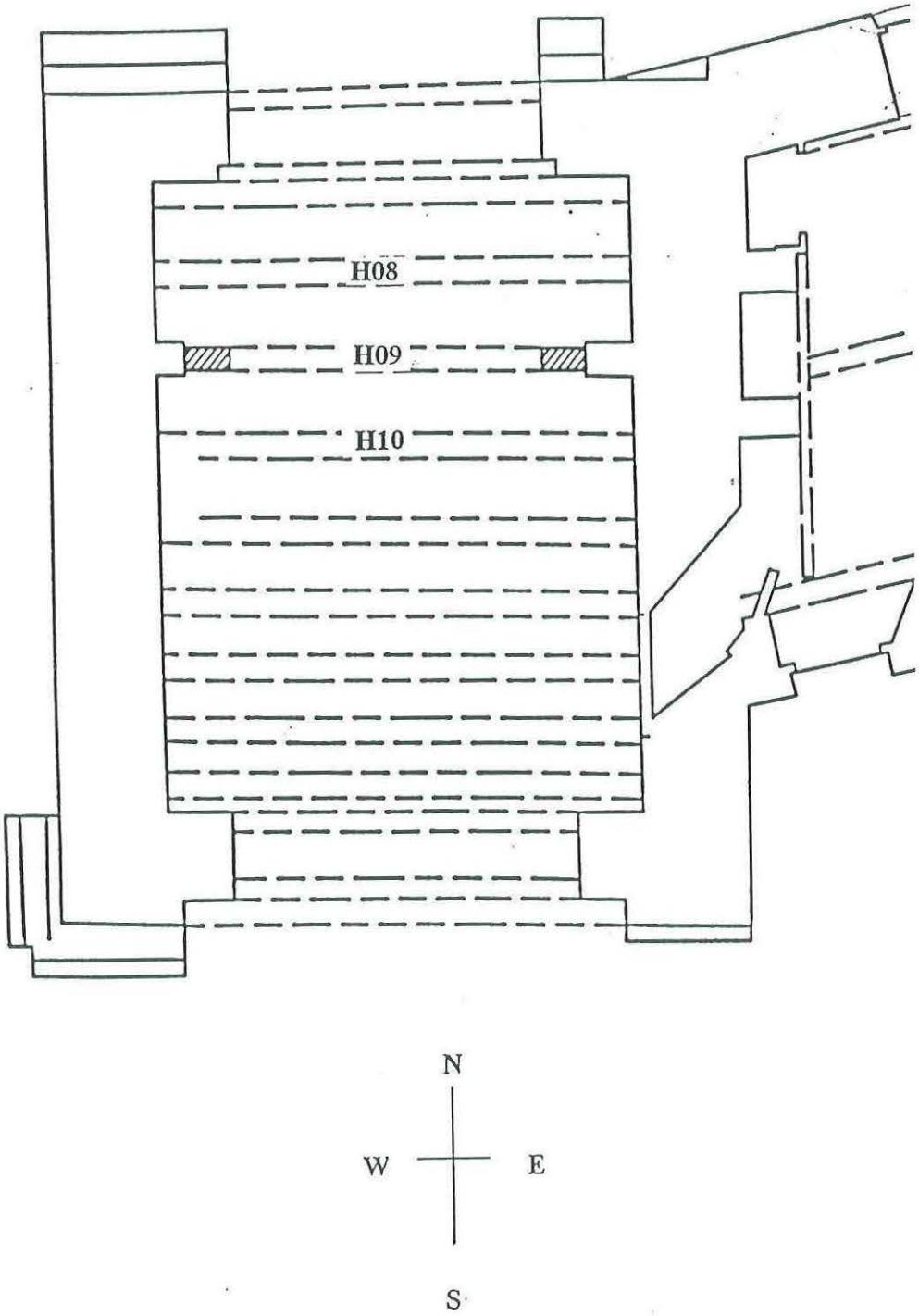

Figure 5: Plan to show positions of samples from the roof of the gatehouse

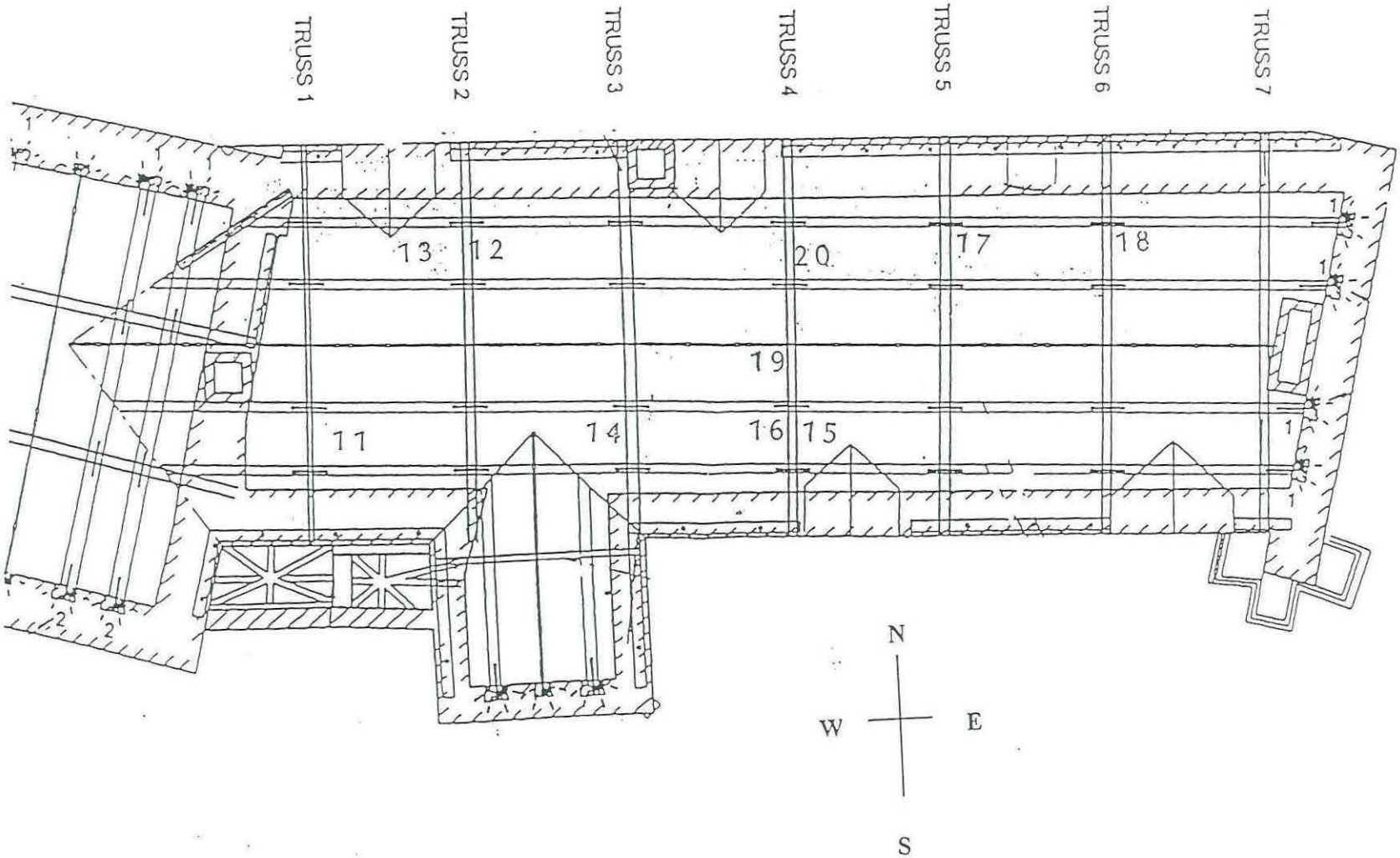

Figure 6a: Drawing to show positions of samples from the trusses of the gatehouse roof

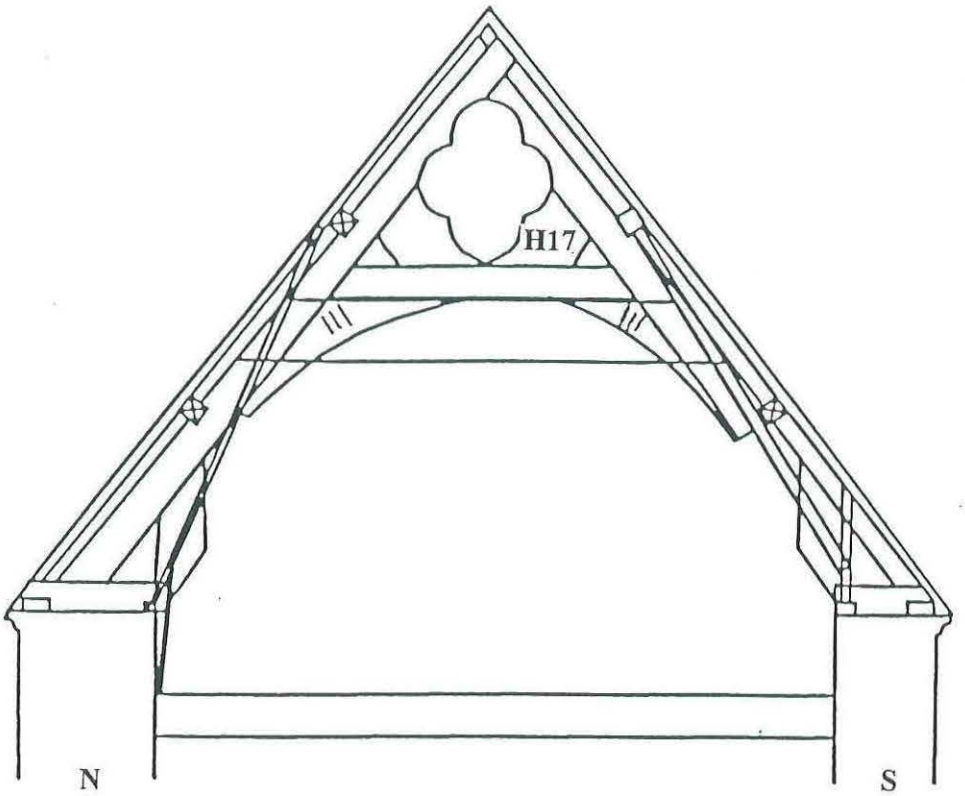

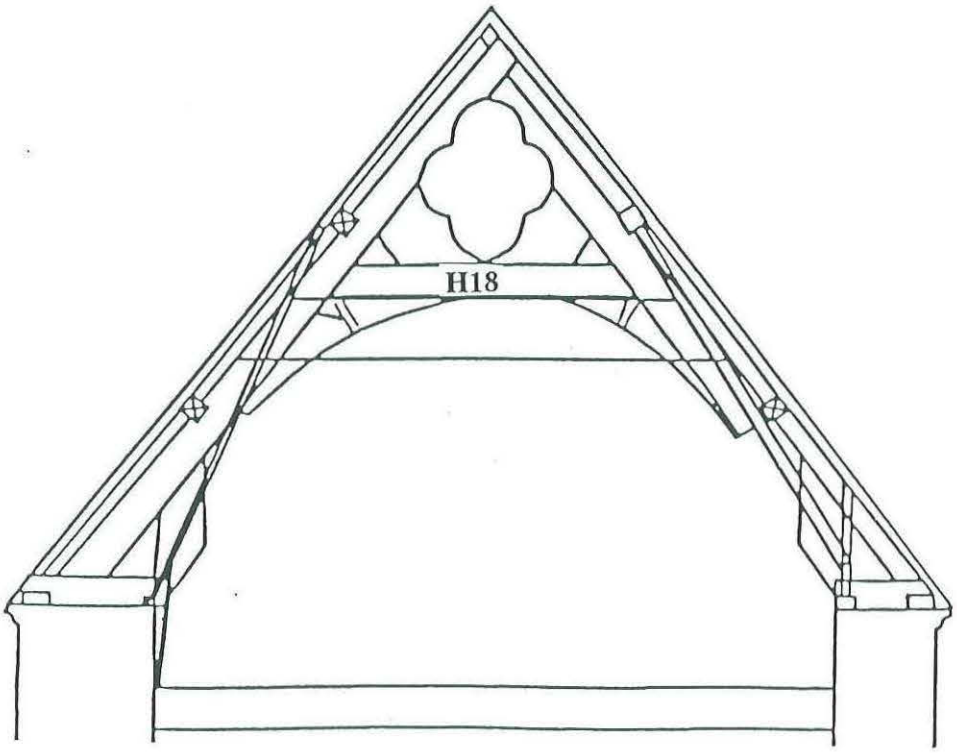

Figure 6b: Drawing to show positions of samples from the trusses of the gatehouse roof

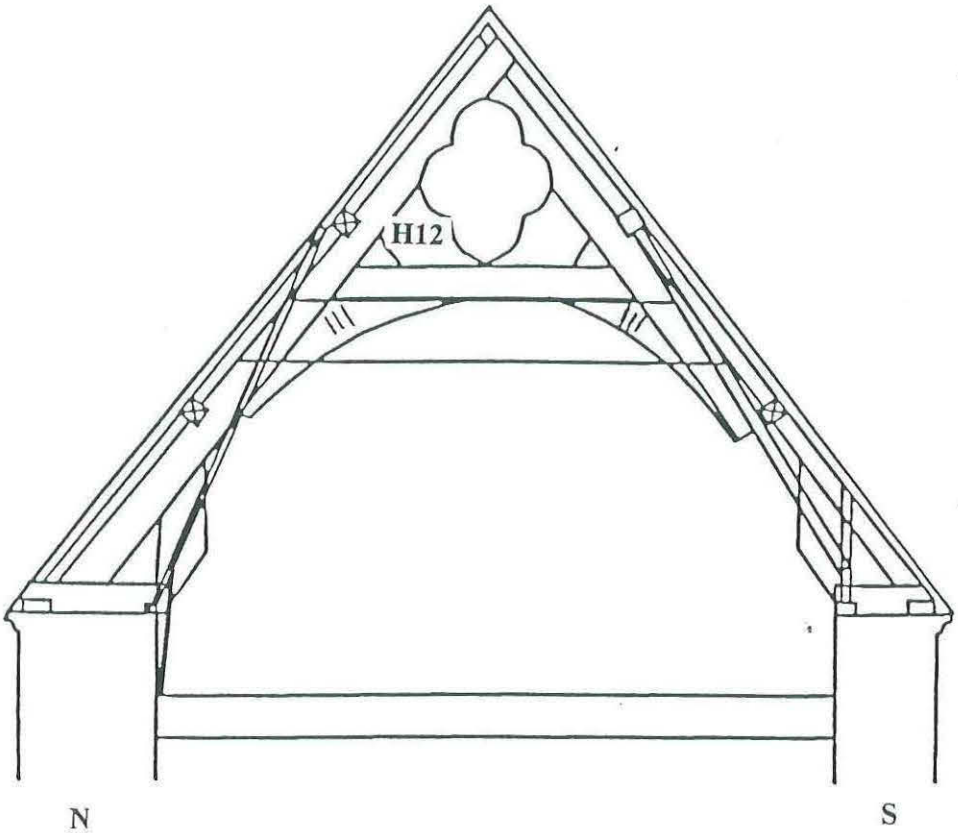

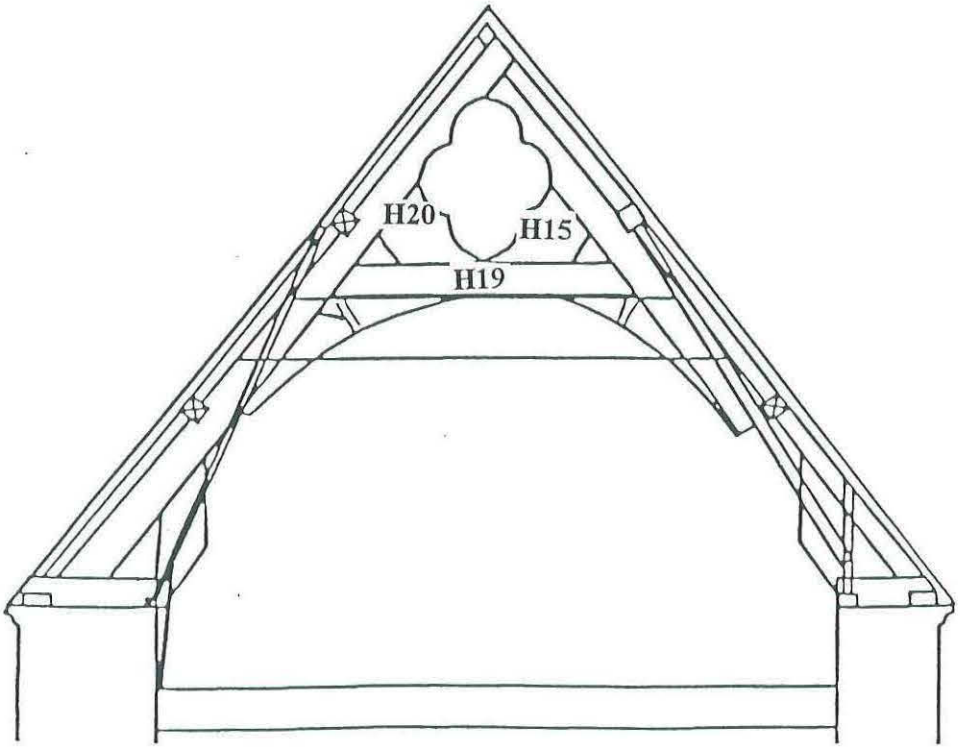

Figure 7: Sketch long-section of gatehouse roof to show positions of samples
(looking north above, looking south below)

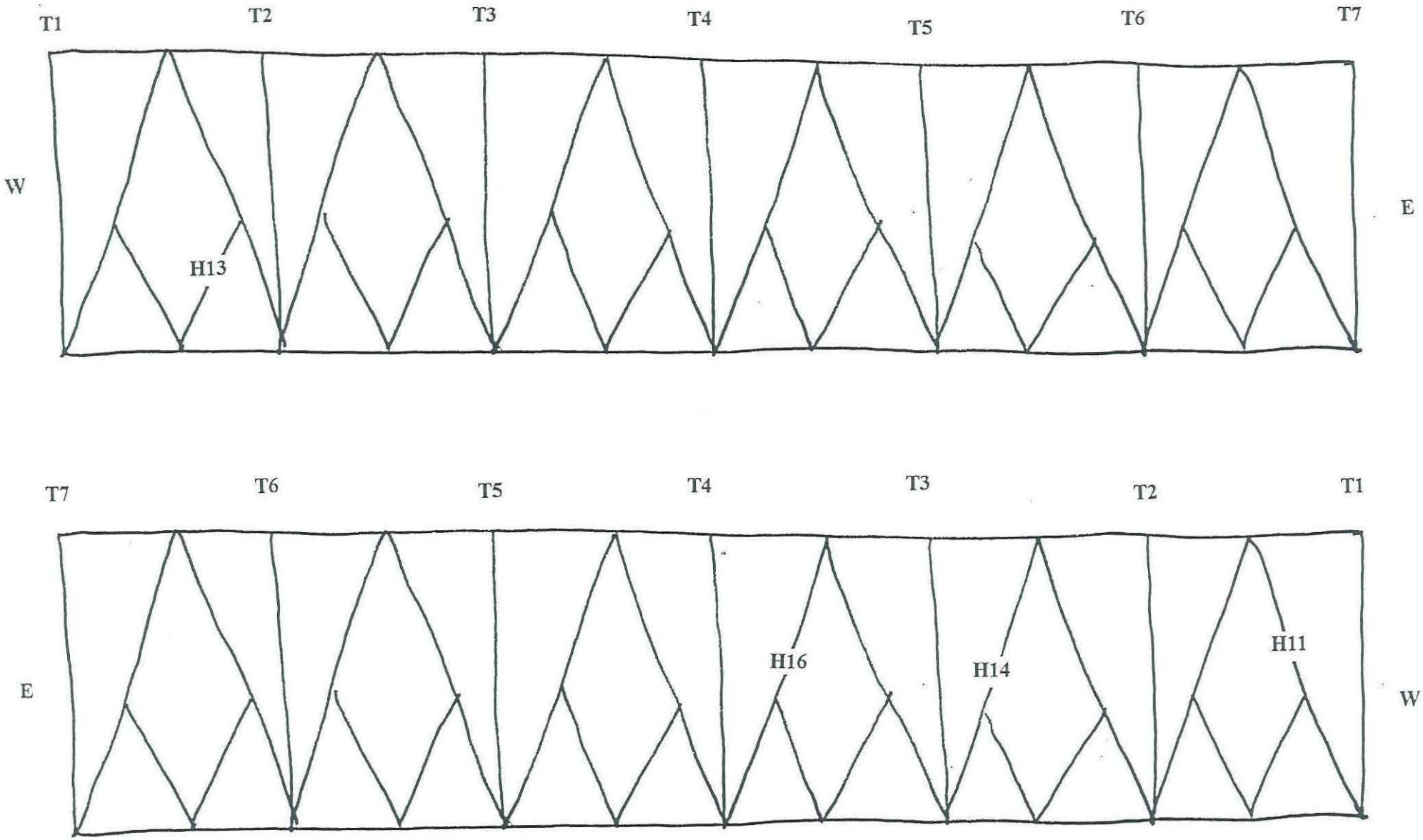

Figure 8: Sketch drawing to show positions of samples from the stairs of the gatehouse

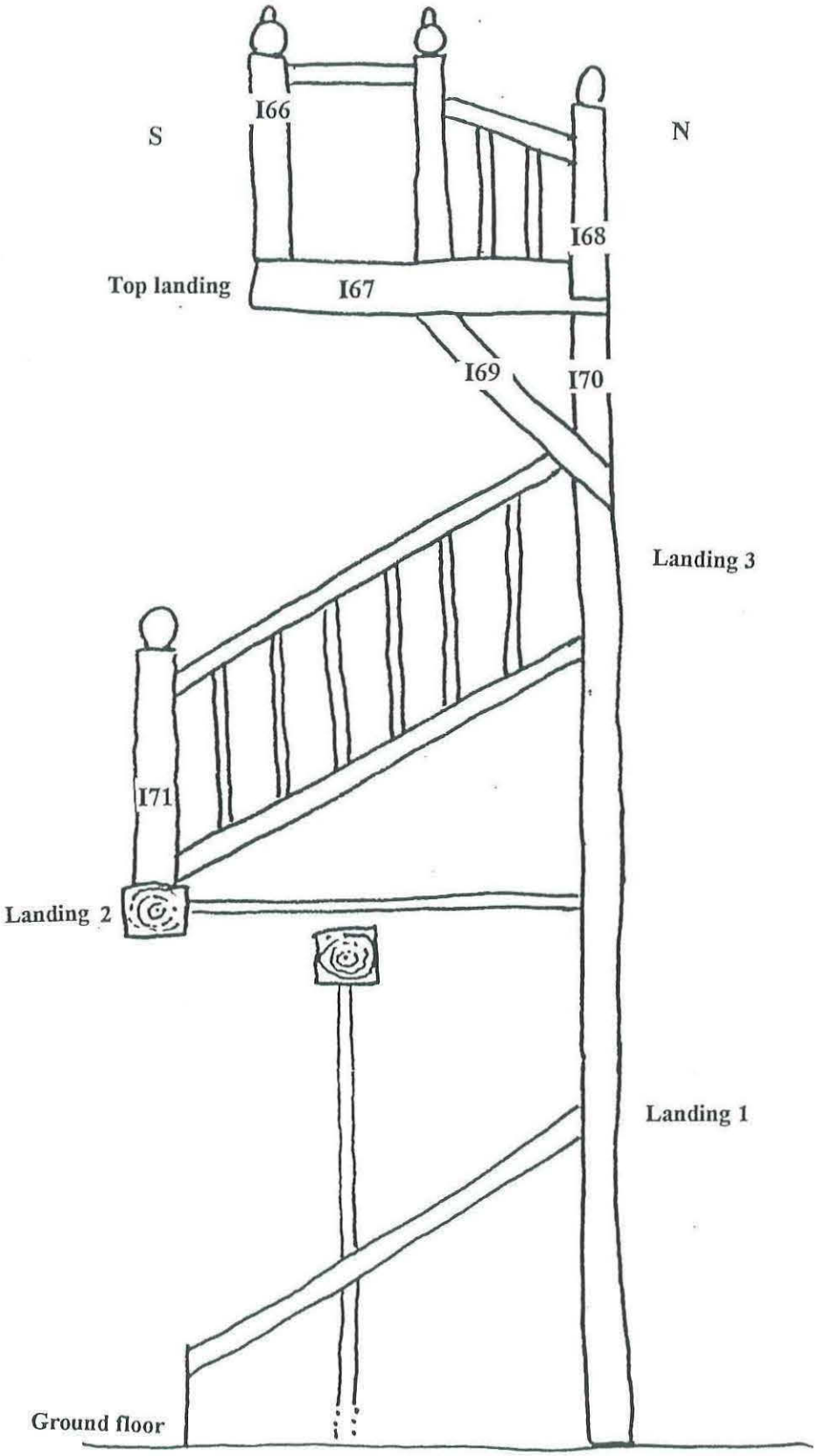

Figure 9: Plan of the ground-floor joists of the gatehouse to show positions of samples

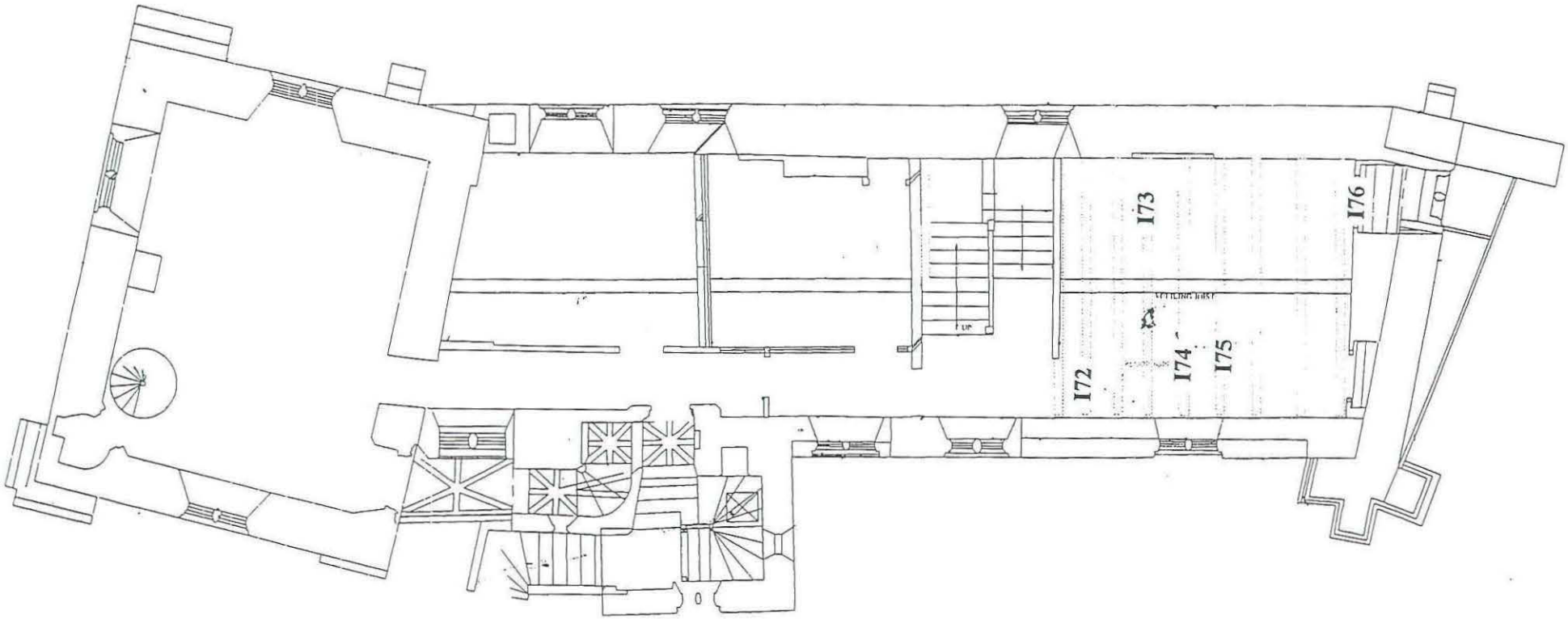

Figure 10: Plan of the first-floor joists of the gatehouse to show positions of samples

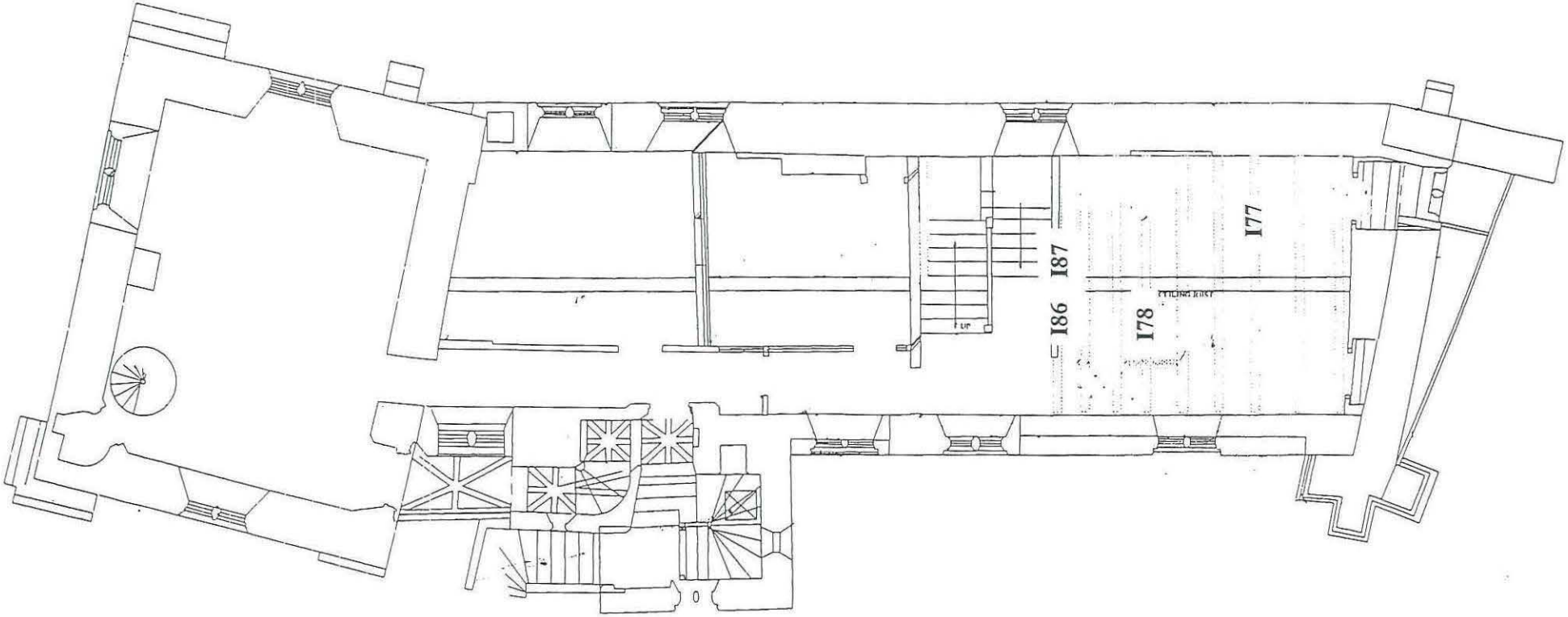

Figure 11: Sketch drawing to show positions of core samples from the partition wall in the gatehouse (sliced samples I83, I84, and I85 from unprovenanced timbers of the wall not shown)

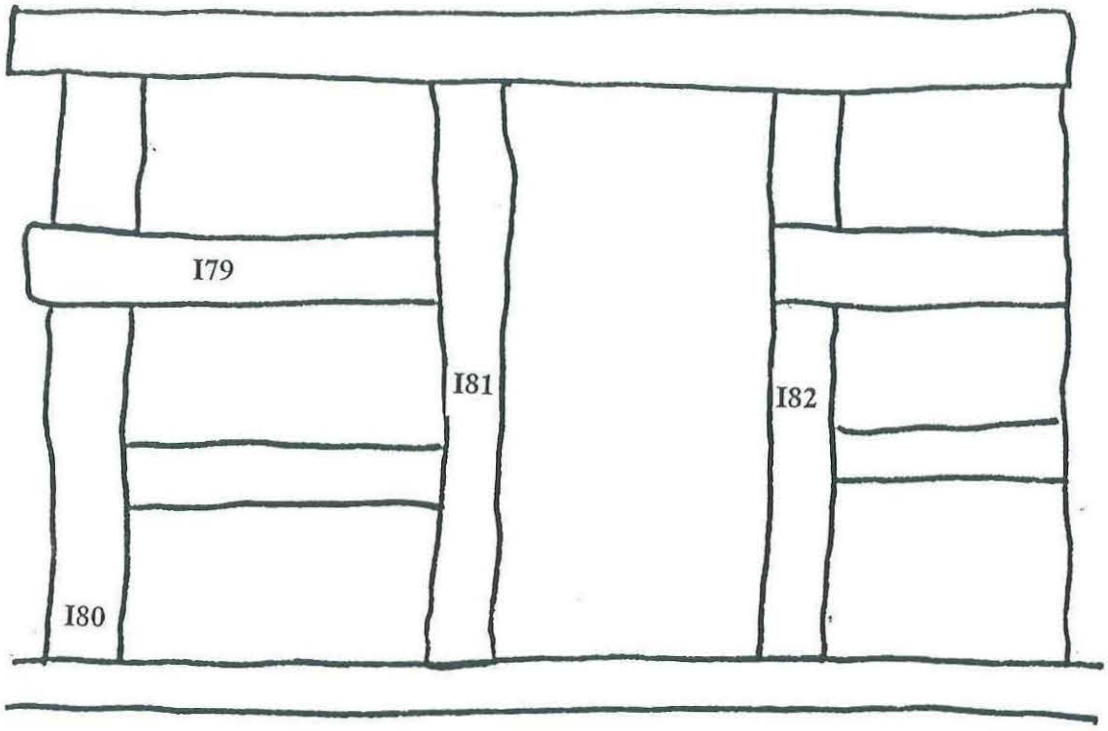

Figure 12: Bar diagram of samples in site chronology STOHSQ01, samples from gatehouse roof, gateway doors, and ceiling

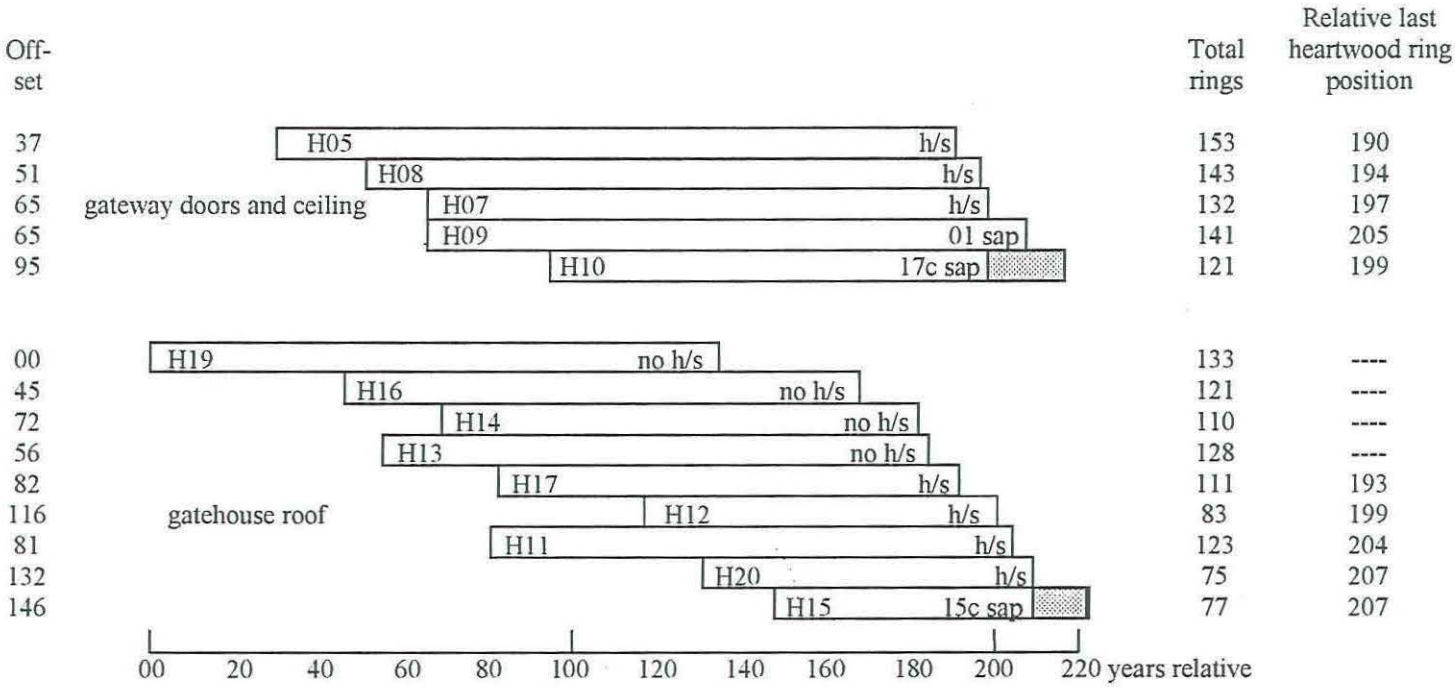

White bar = heartwood rings, shaded area = sapwood rings
h/s = the heartwood/sapwood boundary is the last ring on sample
c = complete sapwood on timber, all or part lost during coring

Figure 13: Bar diagram of samples in site chronology STOHSQ02, gateway doors

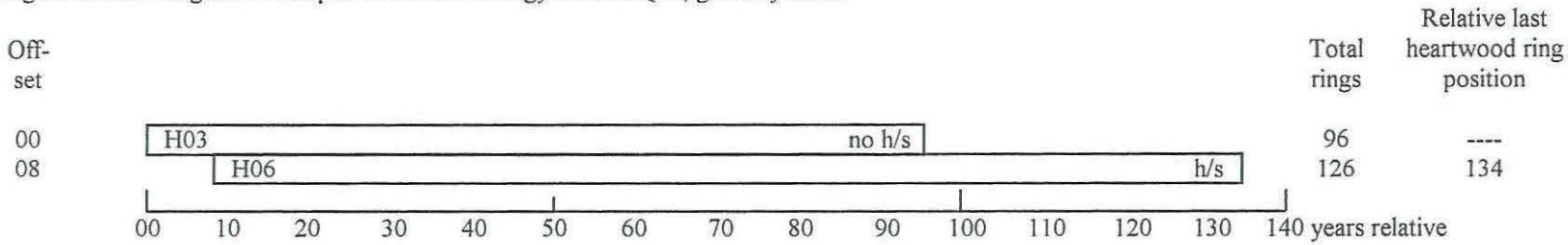

White bar = heartwood rings
h/s = the heartwood/sapwood boundary is the last ring on sample

Figure 14: *t*-value/off-set matrix

	SQ02	H01	H02	H04
SQ02		12	-08	08
H01	3.6			
H02	4.1			
H04	3.9			

Off-sets above diagonal, *t*-values below diagonal

Figure 15: Bar diagram of samples in site chronology STOHSQ03, gateway doors

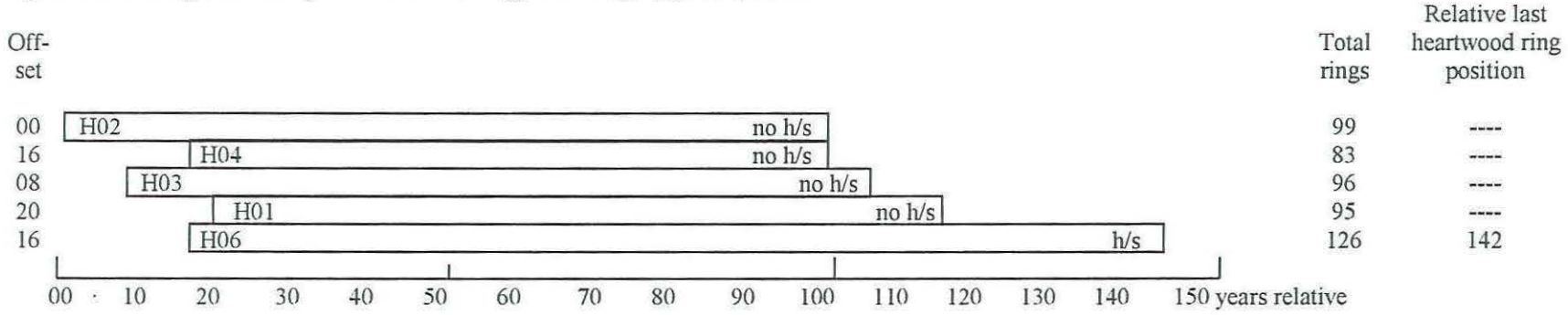

White bar = heartwood rings
h/s = the heartwood/sapwood boundary is the last ring on sample

Figure 16: Bar diagram of samples in site chronology STOISQ01, samples from gatehouse bench, partition walls, stairs, and floor joists

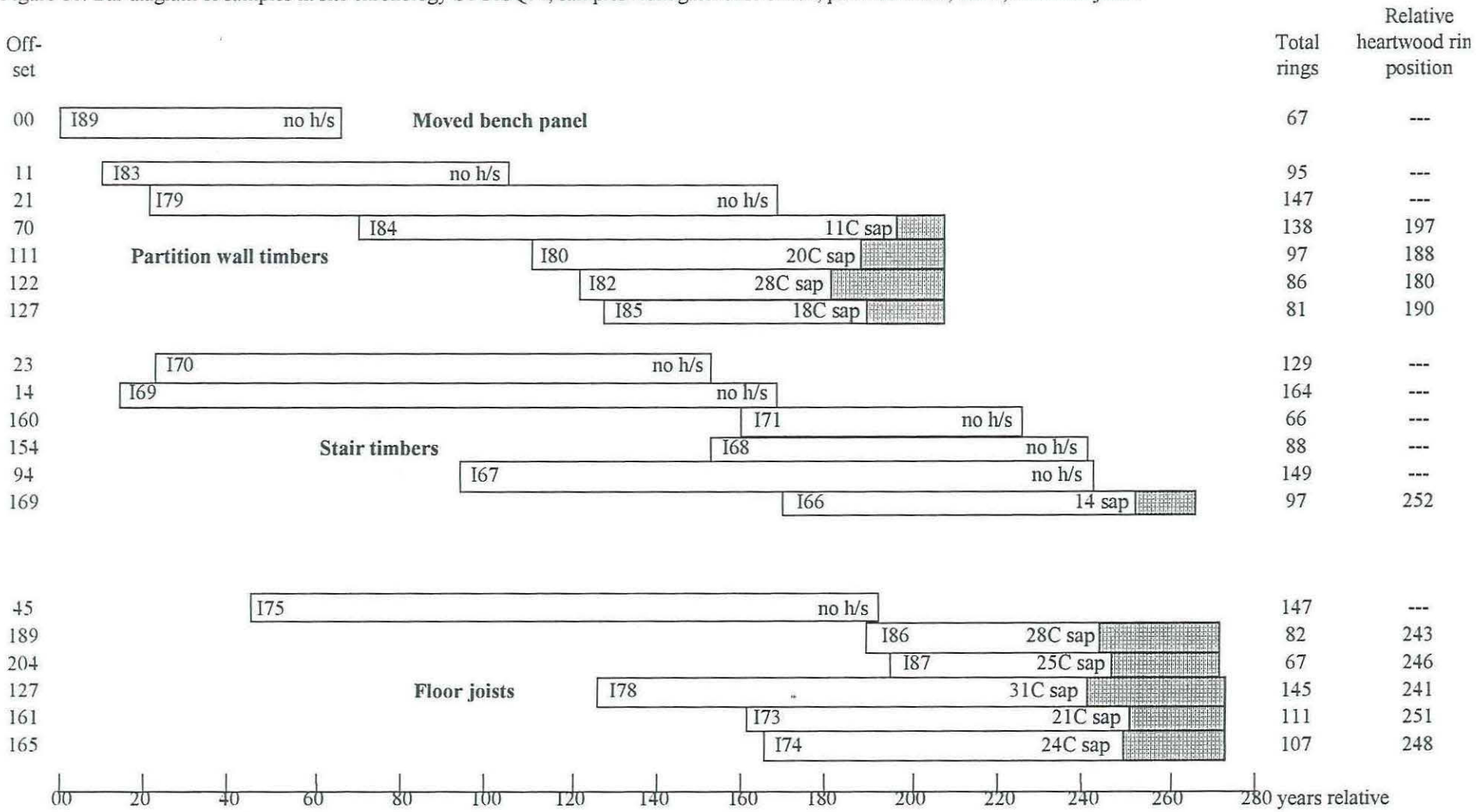

White bars = heartwood rings, shaded area = sapwood rings
h/s = heartwood/sapwood boundary is last ring on sample
C = complete sapwood retained on sample

Figure 17: Bar diagram of samples in site chronology STOISQ02, samples from the gatehouse, group 2

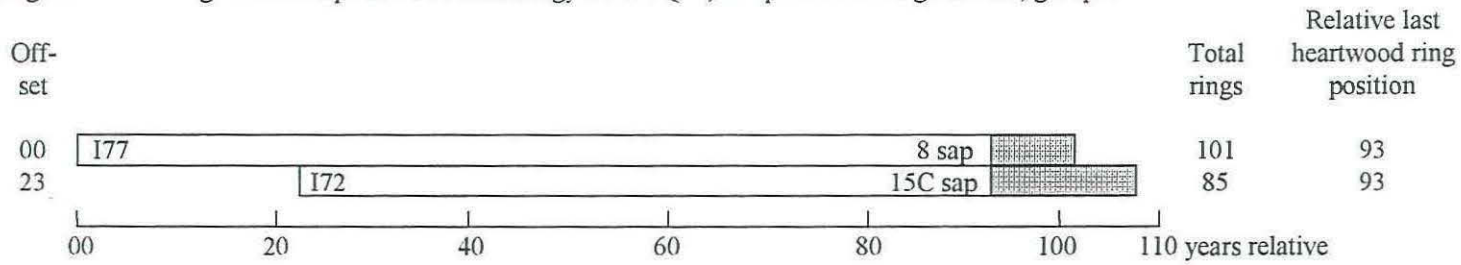

White bars = heartwood rings, shaded area = sapwood rings
C = complete sapwood retained on sample

Figure 18: Plan to show location of the east wing roof within the main house

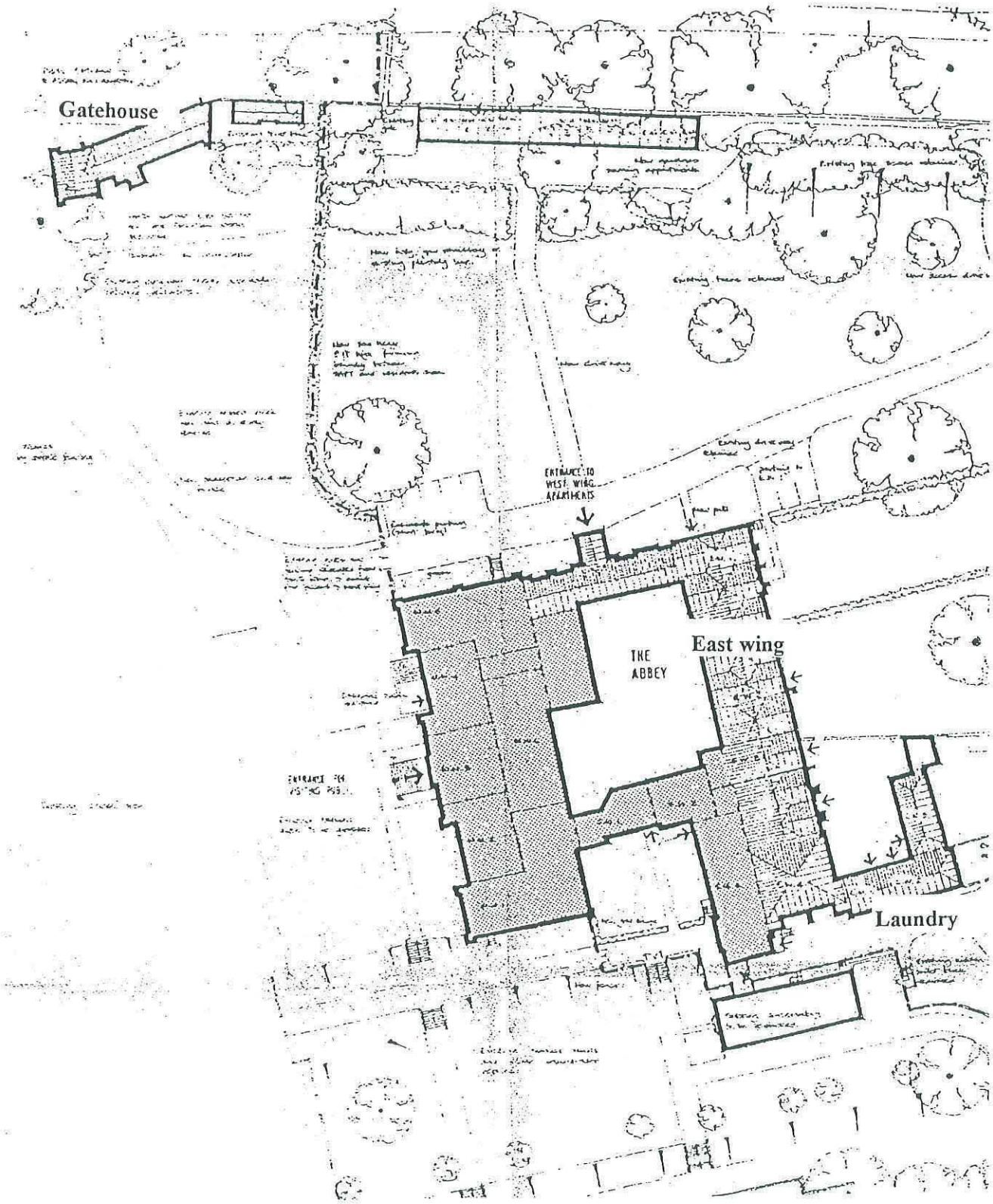

Figure 19: Plan to show positions of samples from the principal trusses of the east wing roof (positions of samples I54 – I65 from common rafters etc not shown)

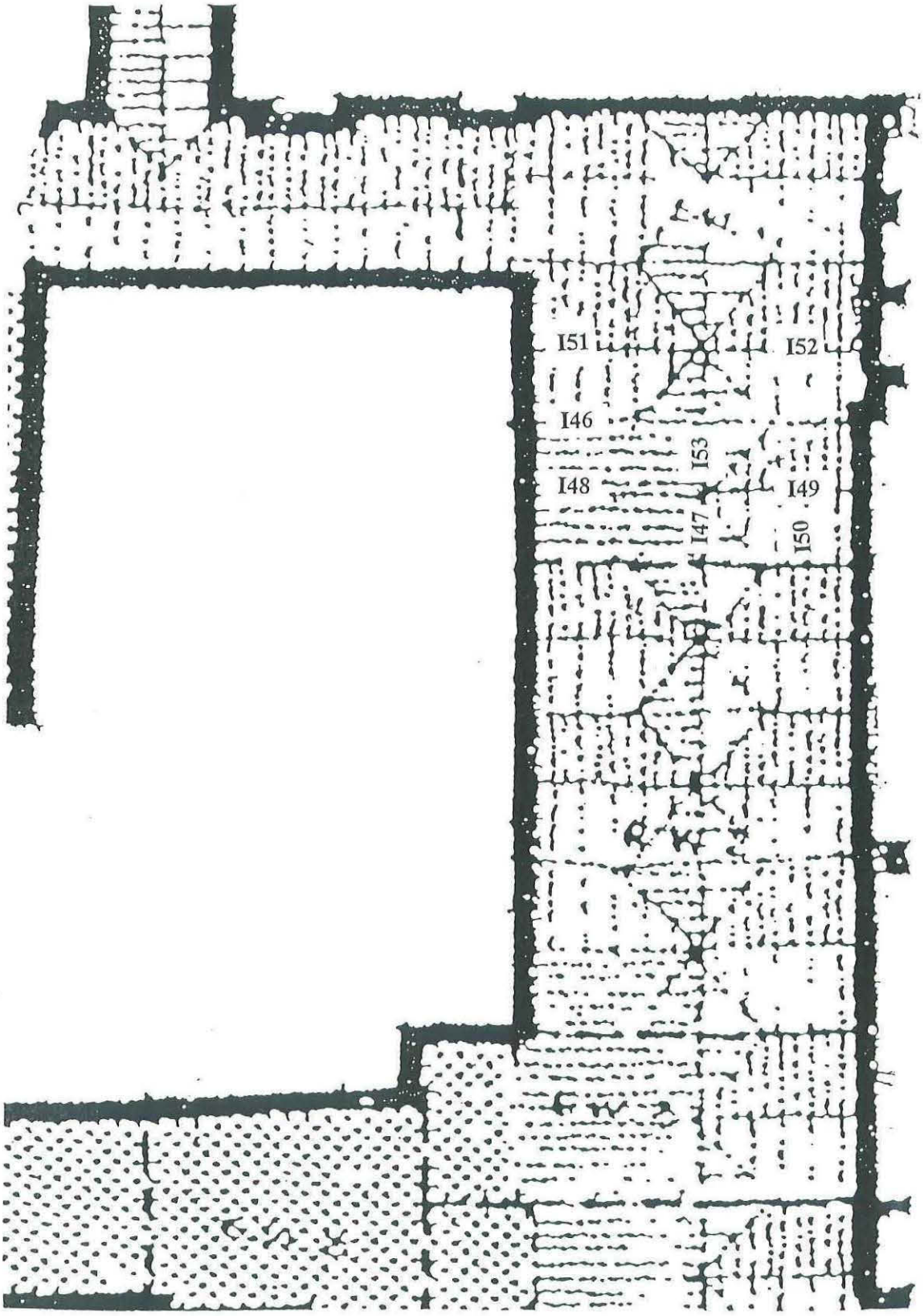

Figure 20: Bar diagram of samples in site chronology STOISQ03, samples from the east wing roof

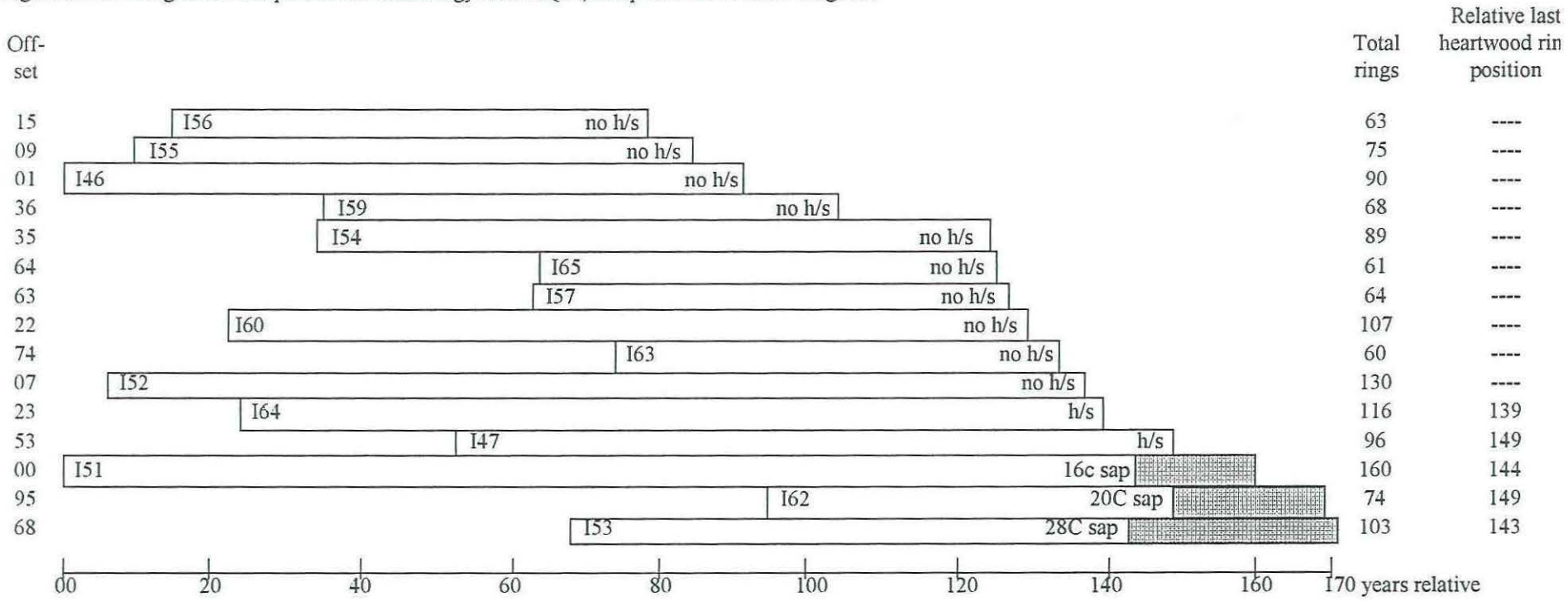

White bars = heartwood rings, shaded area = sapwood rings
h/s = heartwood/sapwood boundary is last ring on sample
c = complete sapwood on timber, all or part lost in sampling
C = complete sapwood retained on sample

Figure 21: General plan of stable buildings

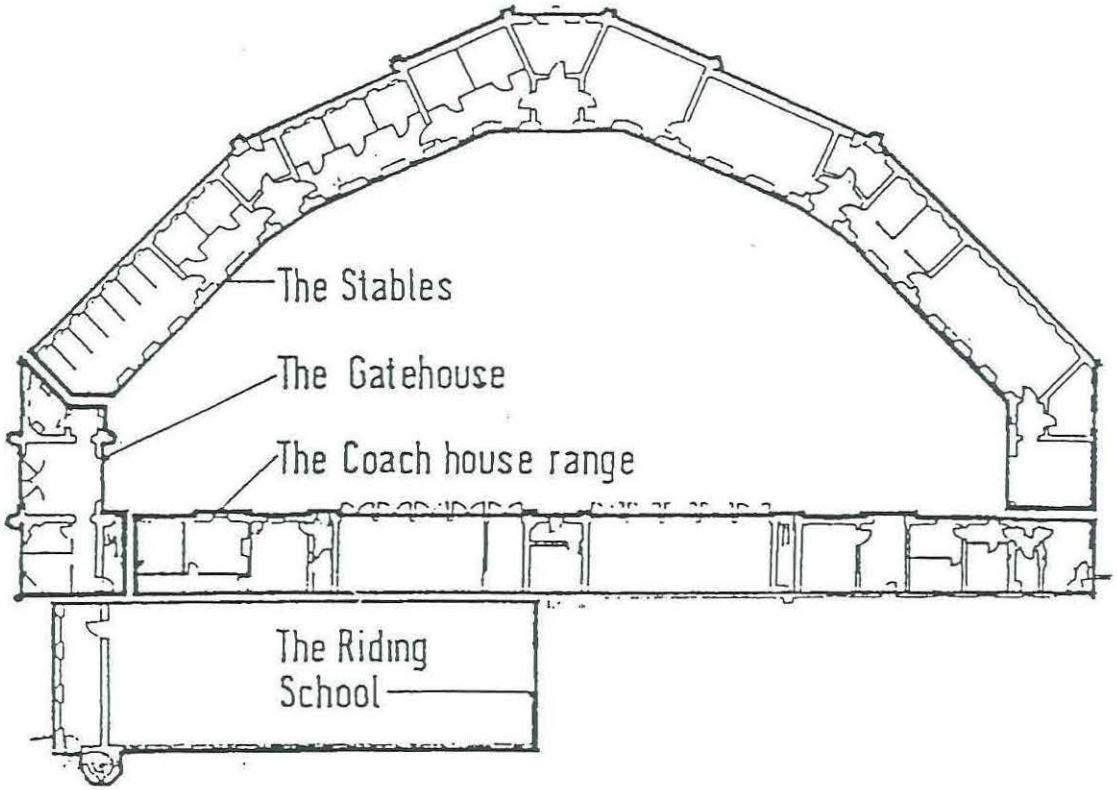

Figure 22: Plan of the roof of the stables showing truss numbers

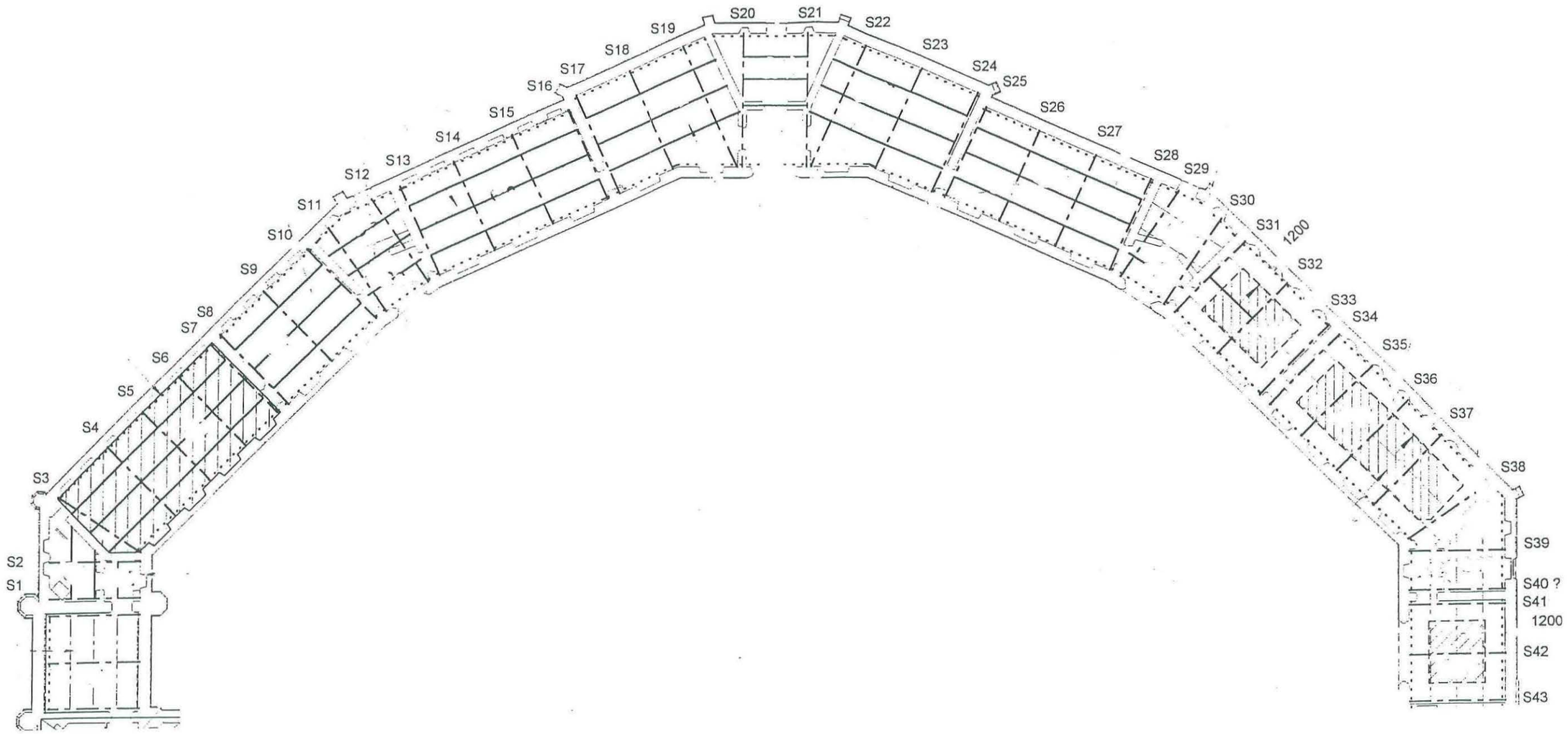

Figure 23a: Drawing to show positions of samples from the trusses of the stable roof

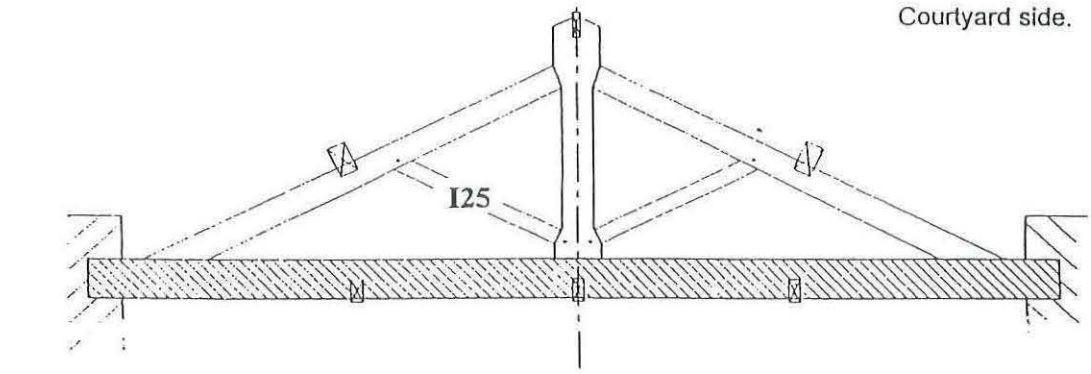

STABLES TRUSS S16

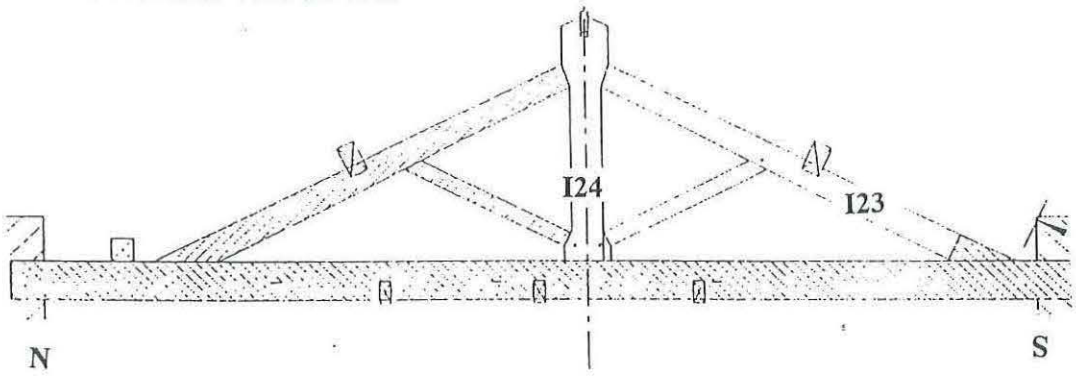

STABLES TRUSS S17

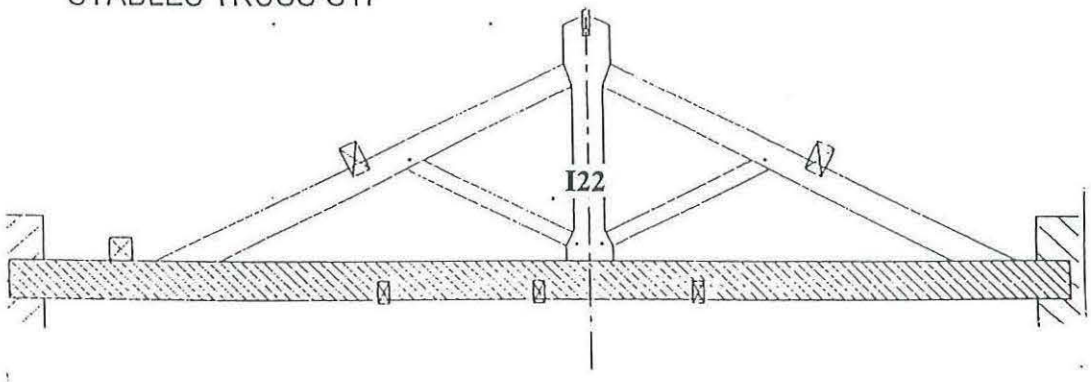

STABLES TRUSS S18

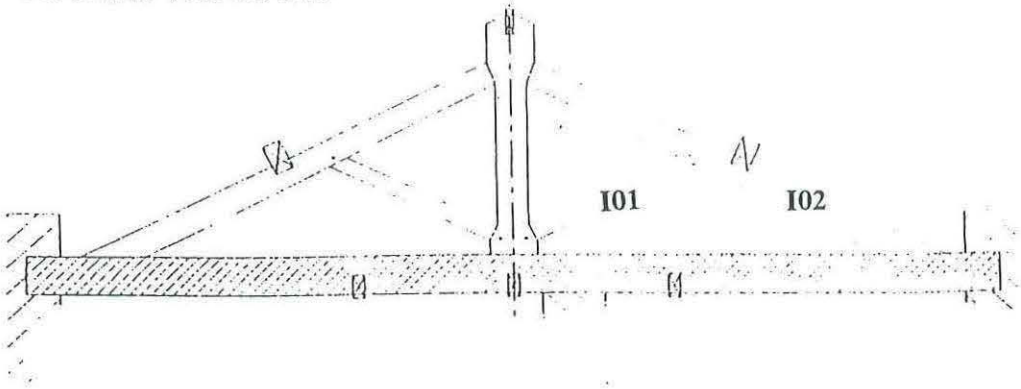

STABLES TRUSS S29

Figure 23b: Drawing to show positions of samples from the trusses of the stable roof

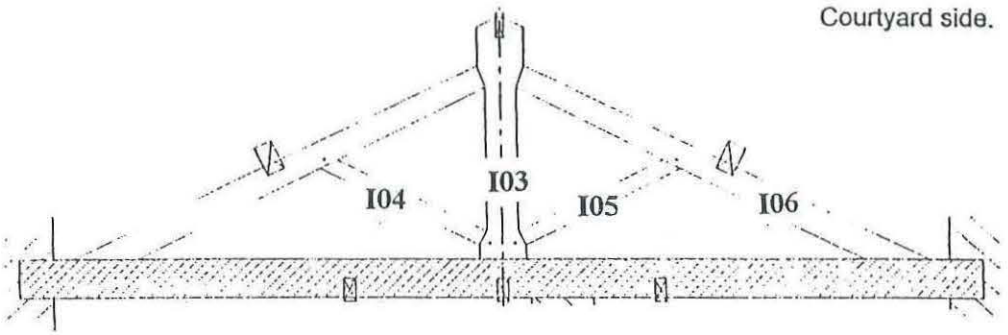

STABLES TRUSS S30

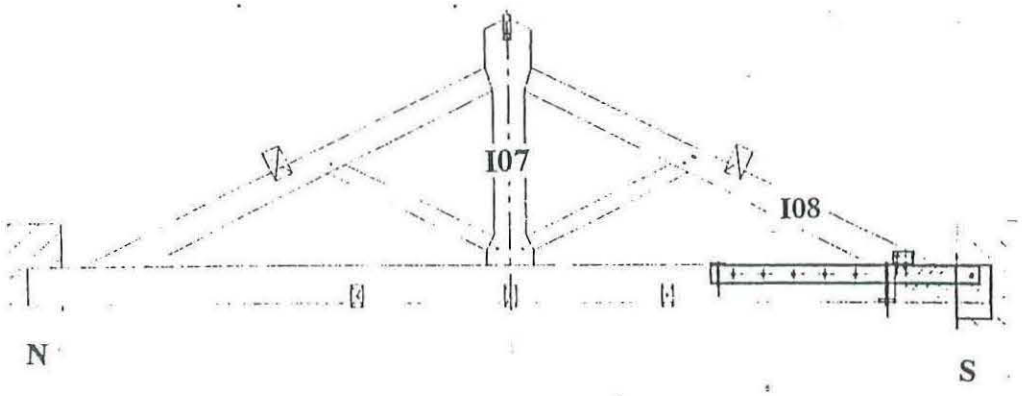

STABLES TRUSS S32

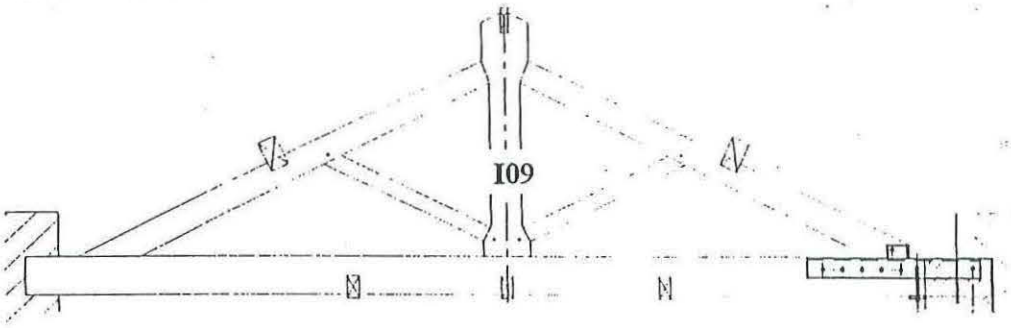

STABLES TRUSS S33

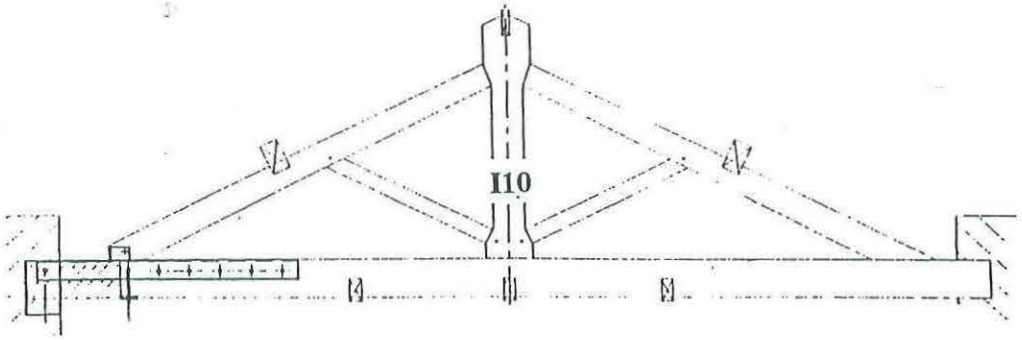

STABLES TRUSS S34

Figure 23c: Drawing to show positions of samples from the trusses of the stable roof

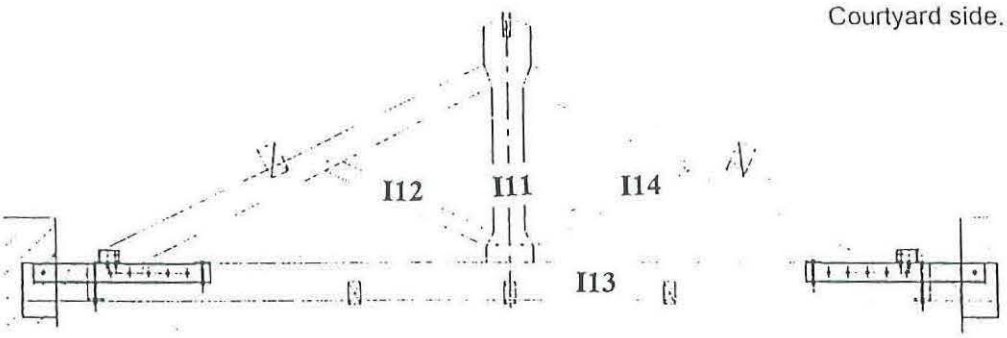

STABLES TRUSS S35

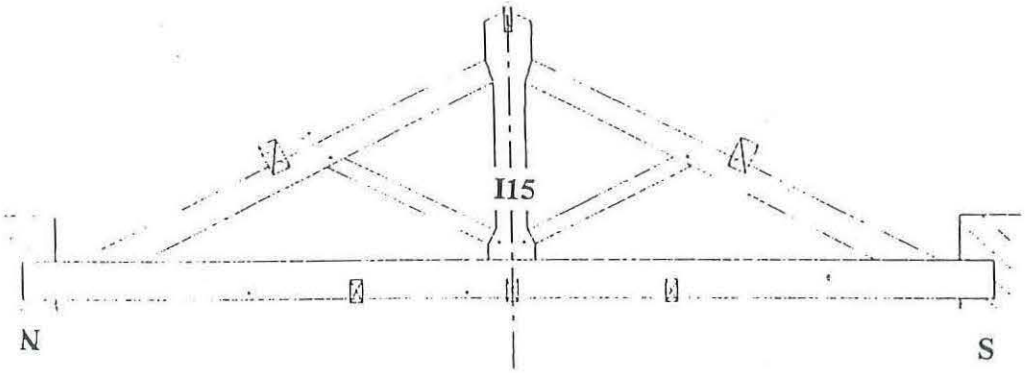

STABLES TRUSS S36

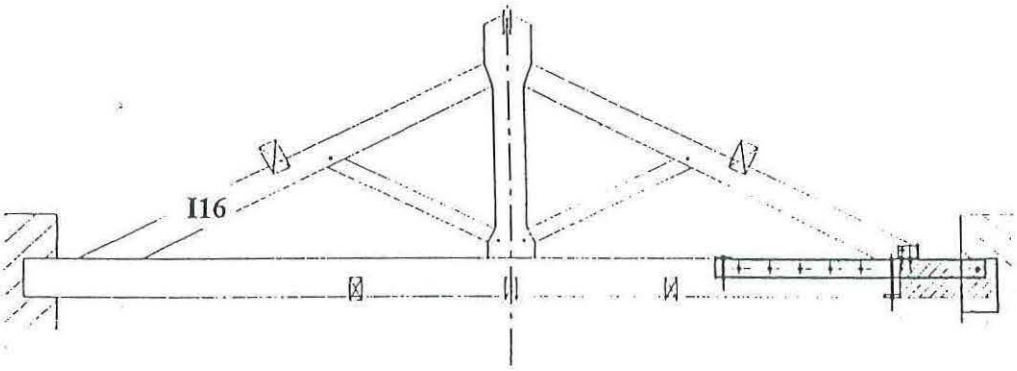

STABLES TRUSS S37

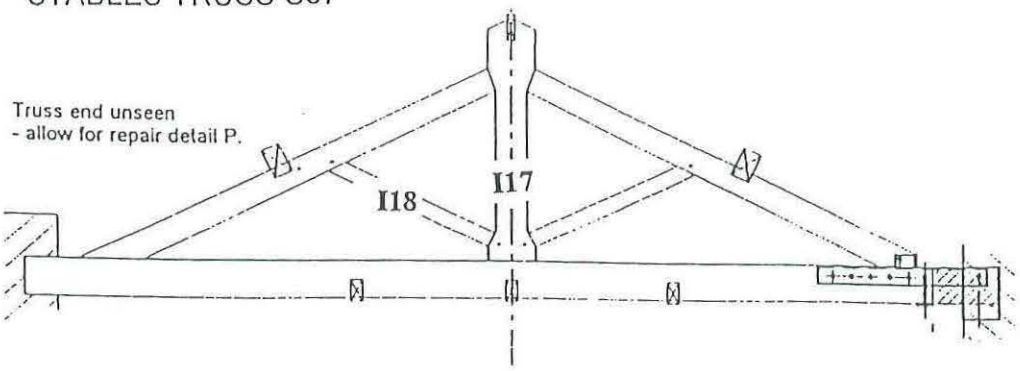

STABLES TRUSS S41

Figure 23d: Drawing to show positions of samples from the trusses of the stable roof

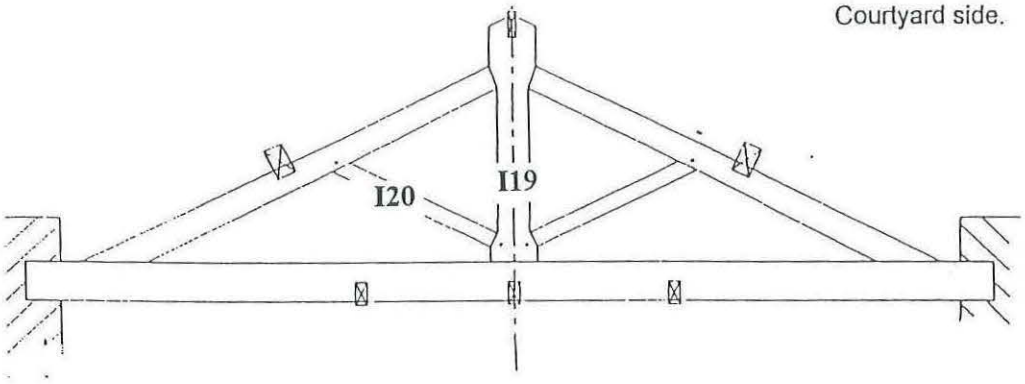

STABLES TRUSS S42

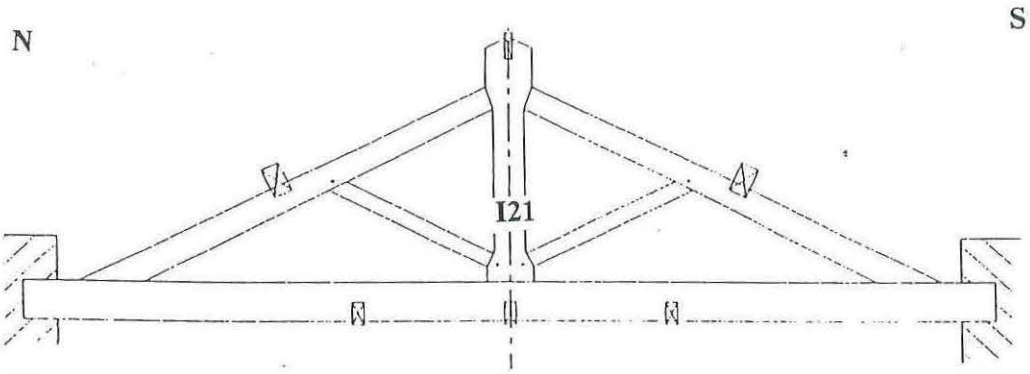

STABLES TRUSS S43

Figure 23e: Drawing to show positions of samples from the trusses of the stable roof

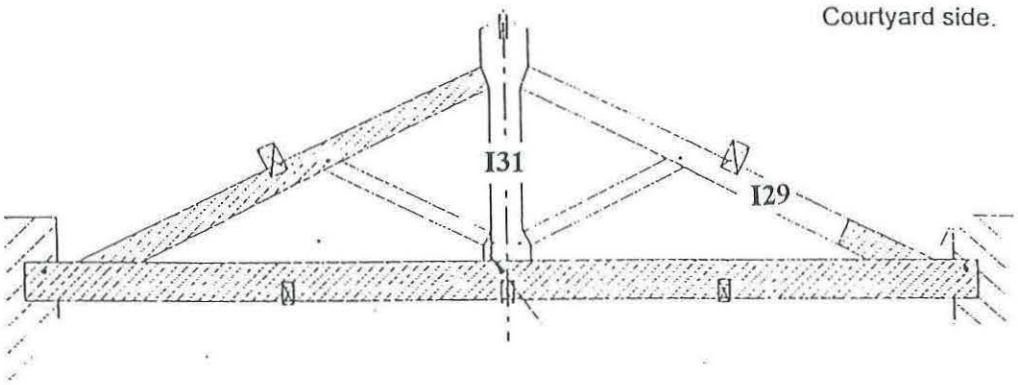

STABLES TRUSS S9

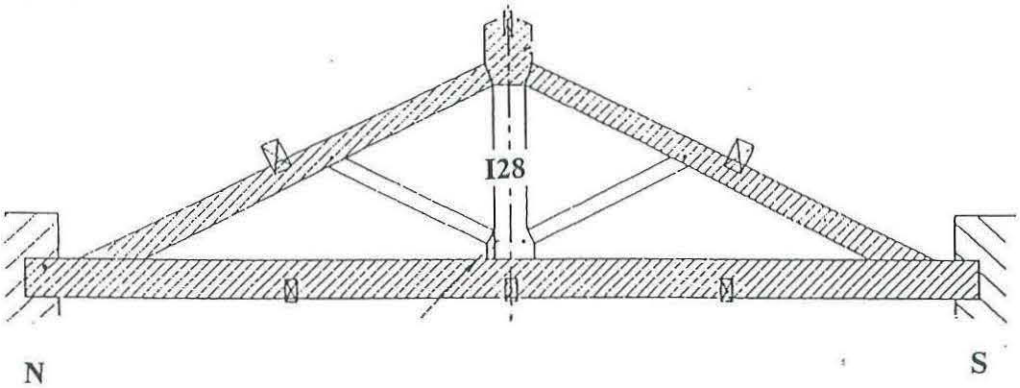

STABLES TRUSS S10

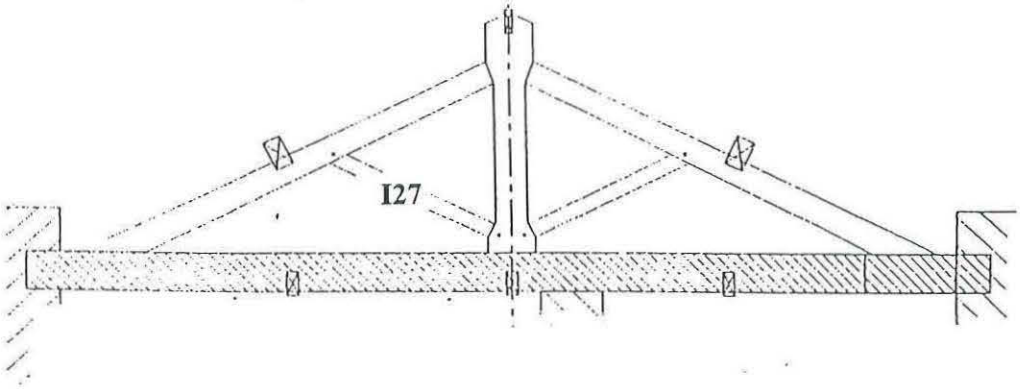

STABLES TRUSS S12

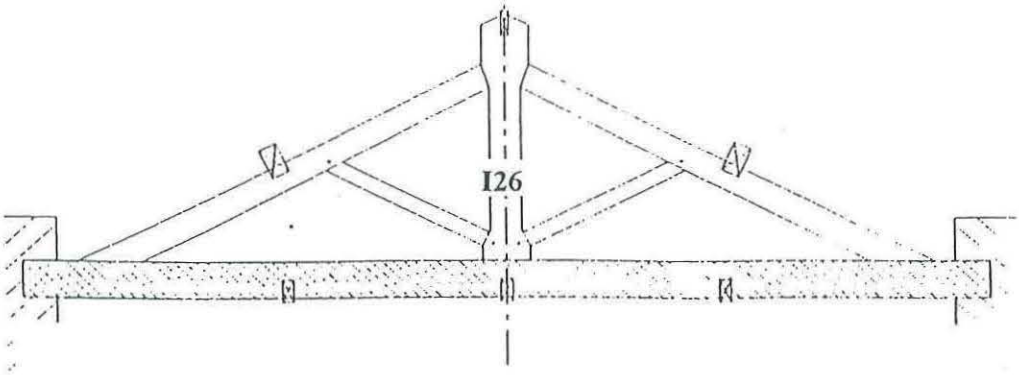

STABLES TRUSS S13

Figure 23f: Drawing to show positions of samples from the trusses of the stable roof

Courtyard side.

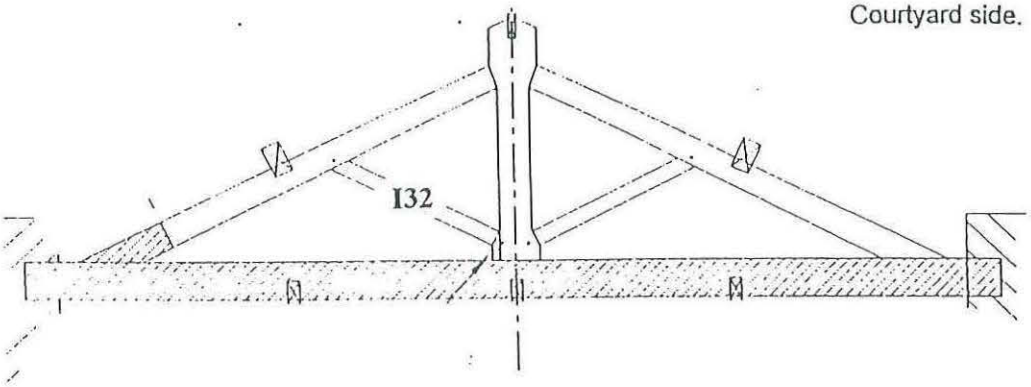

STABLES TRUSS S4

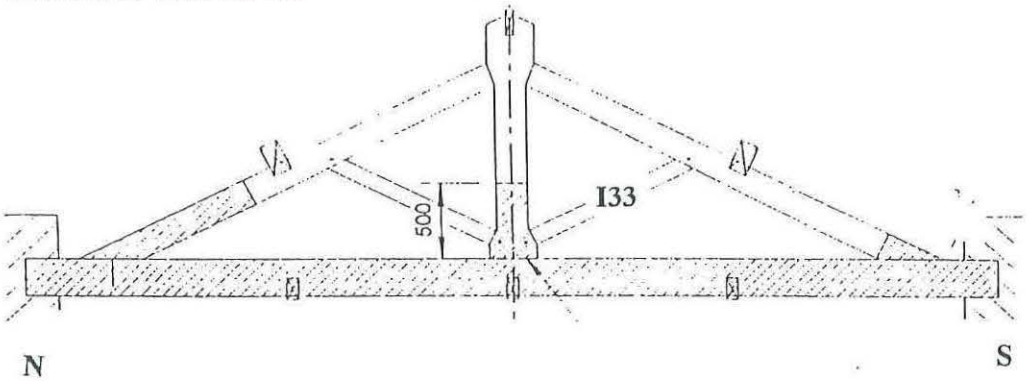

STABLES TRUSS S5

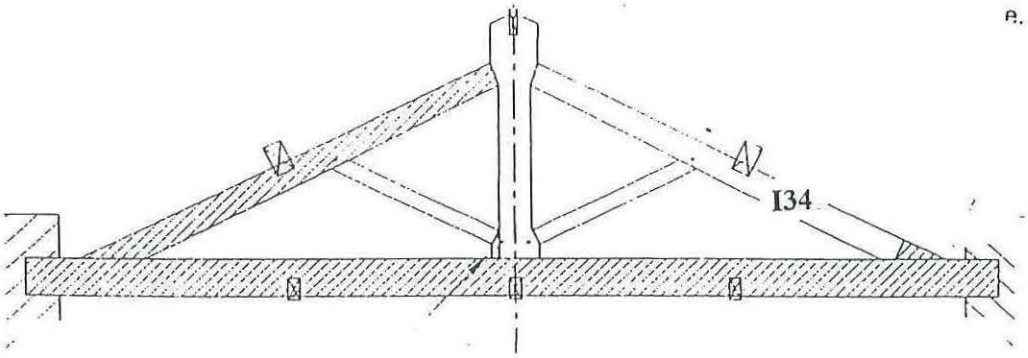

STABLES TRUSS S6

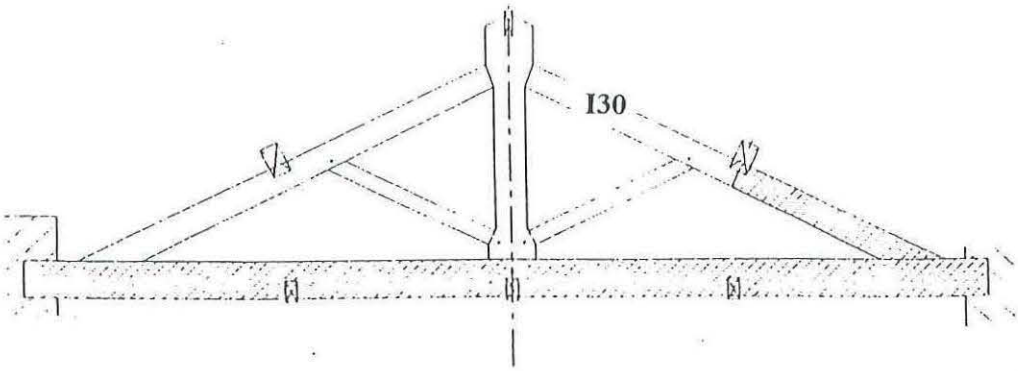

STABLES TRUSS S7

Figure 24: Bar diagram of samples in site chronology STOISQ04, samples from the stable roof, group 1

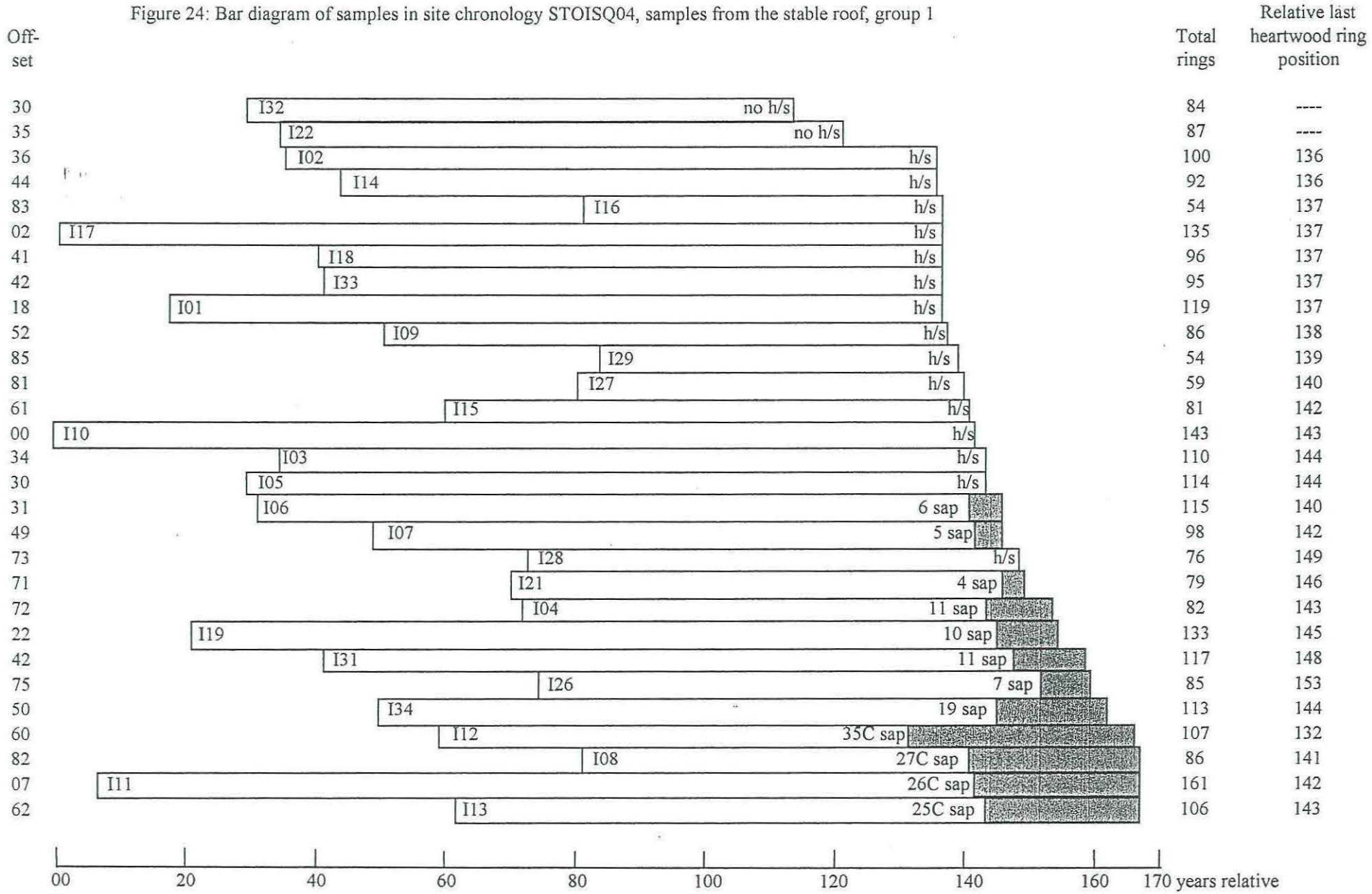

White bars = heartwood rings, shaded area = sapwood rings
h/s = heartwood/sapwood boundary is last ring on sample
C = complete sapwood retained on sample

Figure 25: Bar diagram of samples in site chronology STOISQ05, samples from the stable roof, group 2

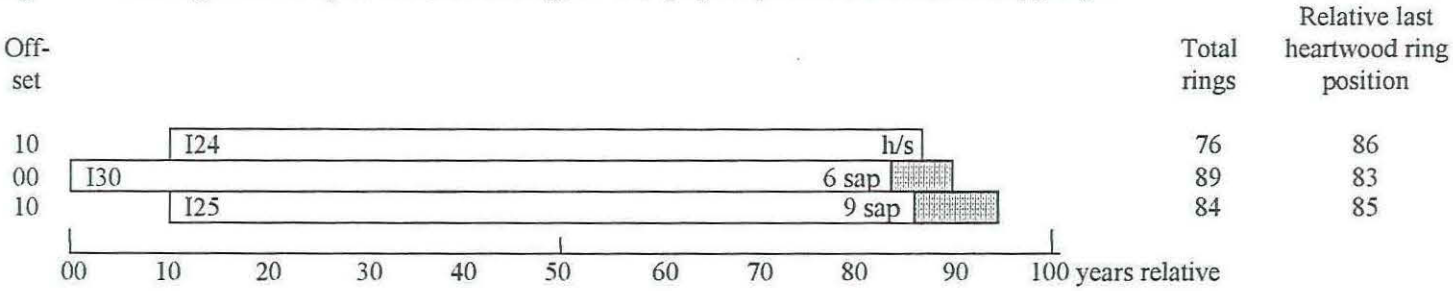

White bars = heartwood rings, shaded area = sapwood rings
h/s = heartwood/sapwood boundary is last ring on sample

Figure 26: Sketch drawing to show positions of samples from laundry roof

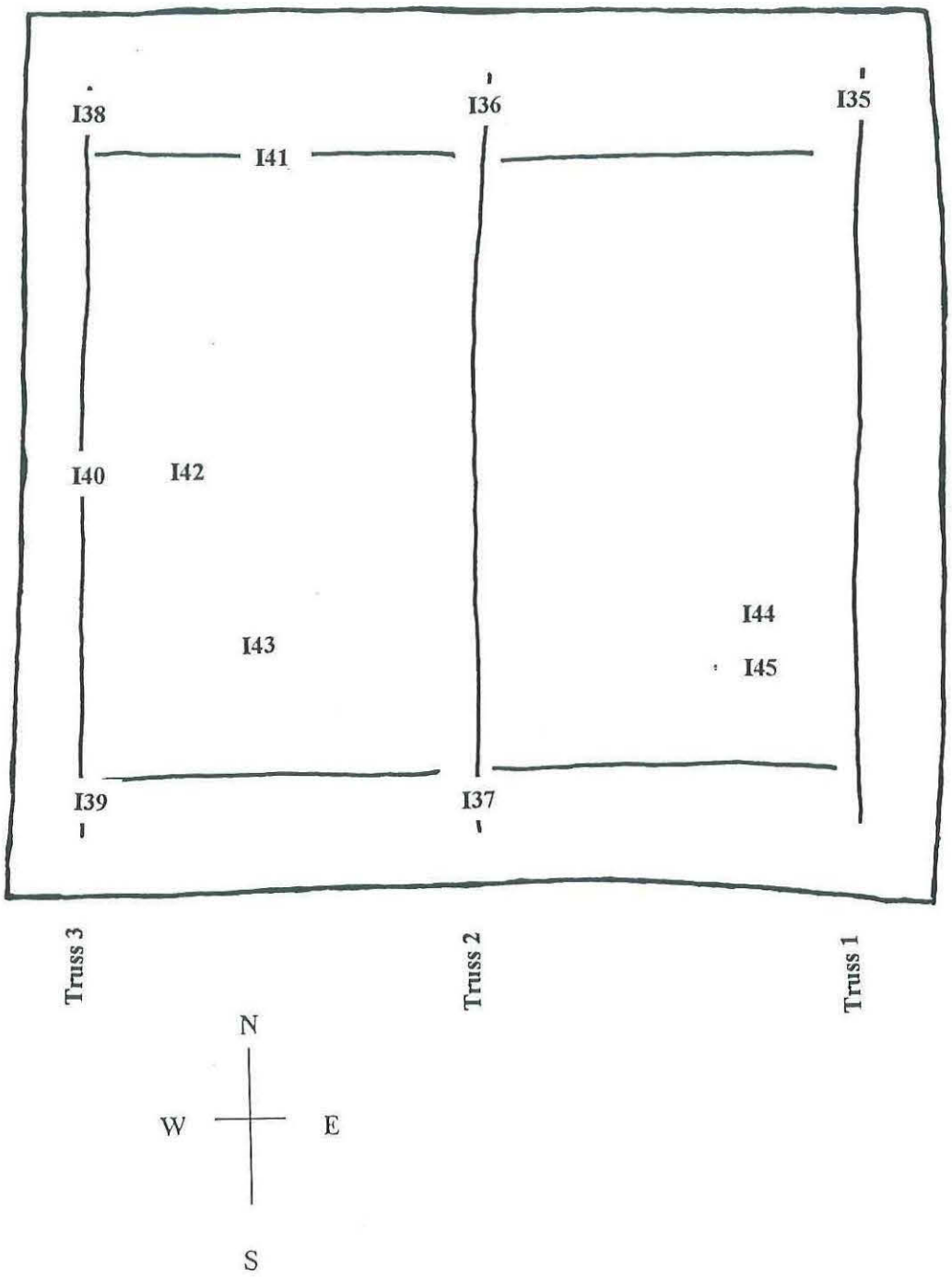

Figure 27: Bar diagram of samples in site chronology STOISQ06, samples from the laundry roof, group 1

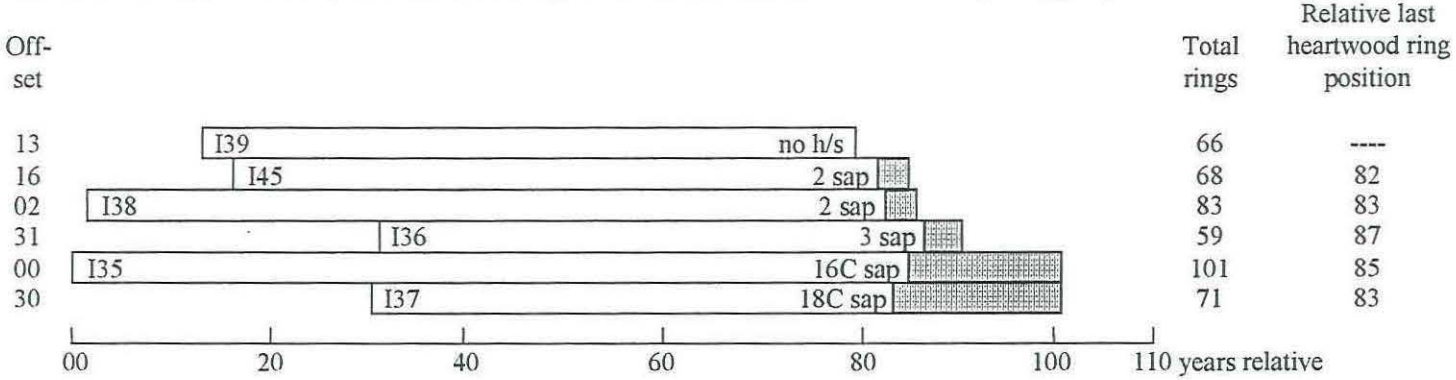

White bars = heartwood rings, shaded area = sapwood rings
h/s = heartwood/sapwood boundary is last ring on sample
C = complete sapwood retained on sample

Figure 28: Bar diagram of samples in site chronology STOISQ07, samples from the laundry roof, group 2

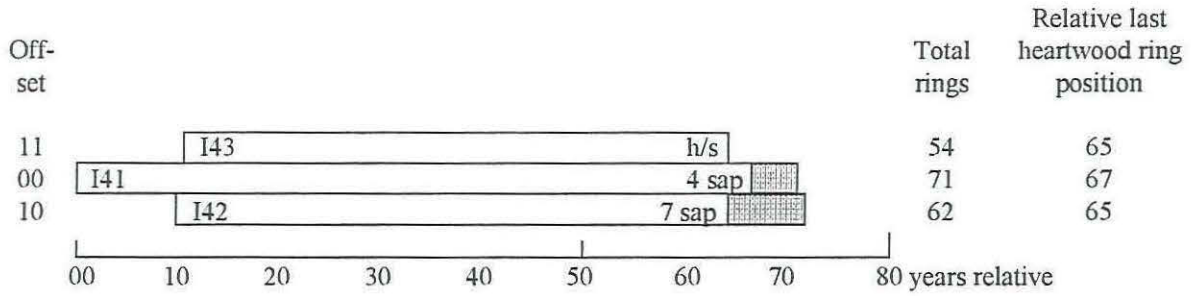

White bars = heartwood rings, shaded area = sapwood rings
h/s = heartwood/sapwood boundary is last ring on sample

Figure 29. Map of Abbey parkland to show approximate locations of living trees sampled

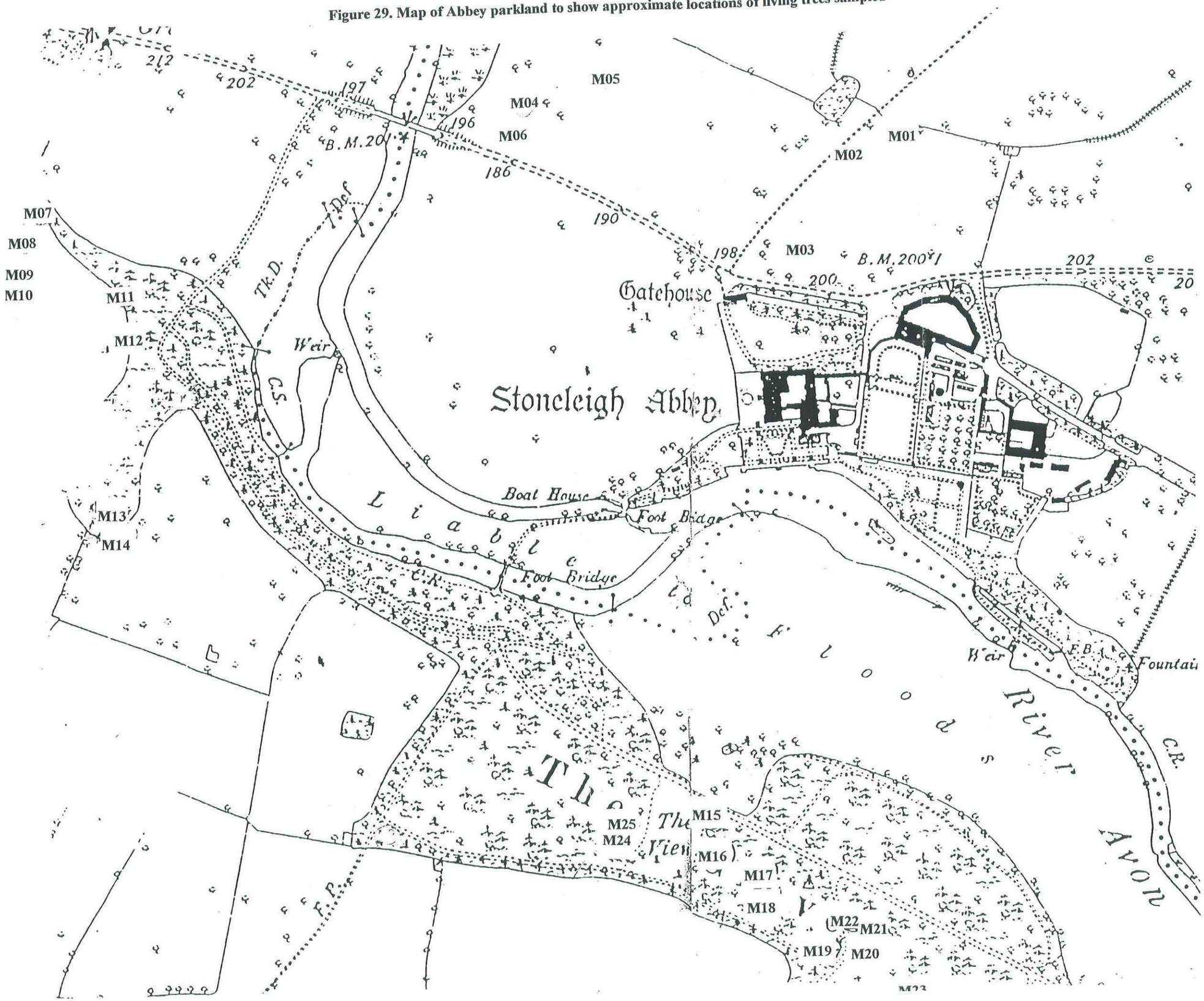

Figure 30: Bar diagram of samples in site chronology STOMSQ01

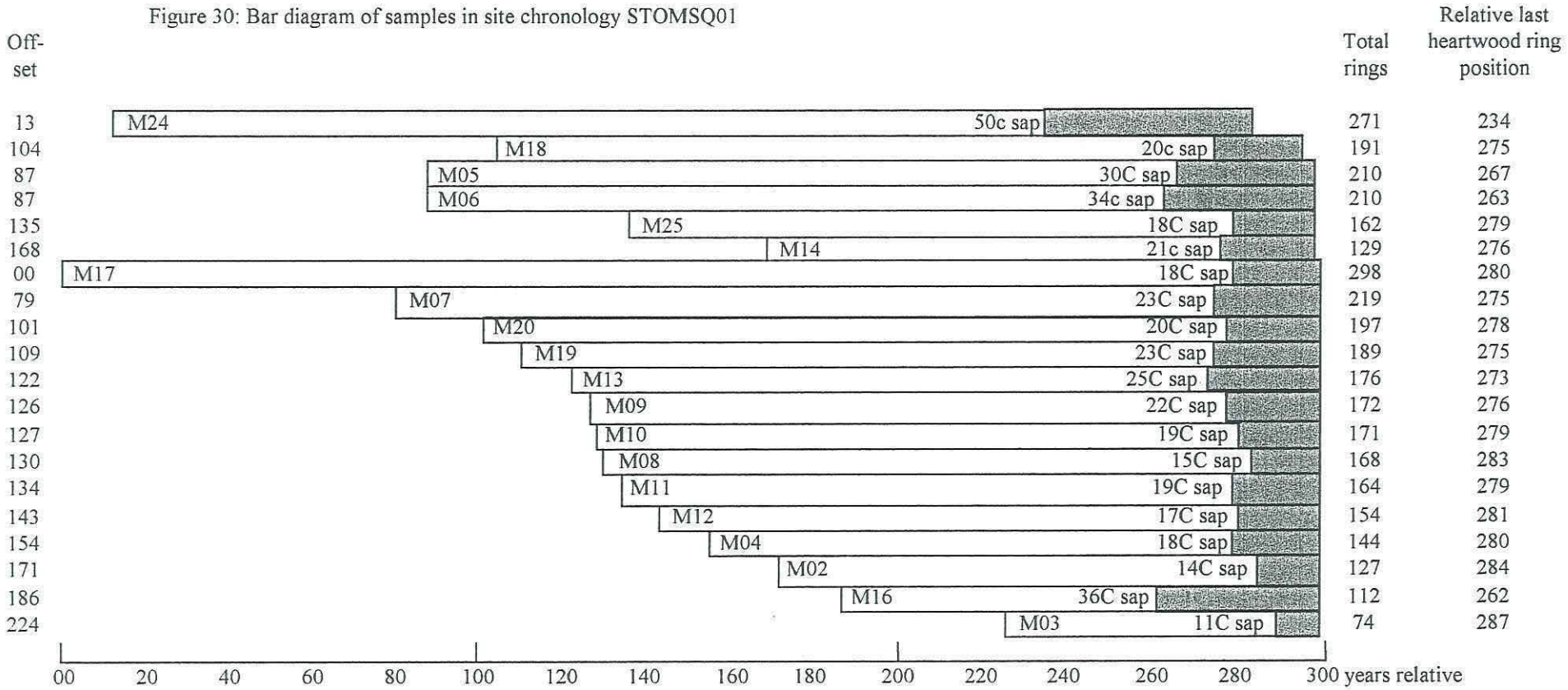

White area = heartwood rings, shaded area = sapwood rings
C = complete sapwood is retained on the sample

Figure 31: Bar diagram to show relative positions of relevant reference chronologies applicable to Warwickshire. The bar diagram shows the relative off-set position of each reference chronologies and the relative position of its last ring. It also shows the absolute first and last ring dates. A key to the number of each reference chronology is provided below.

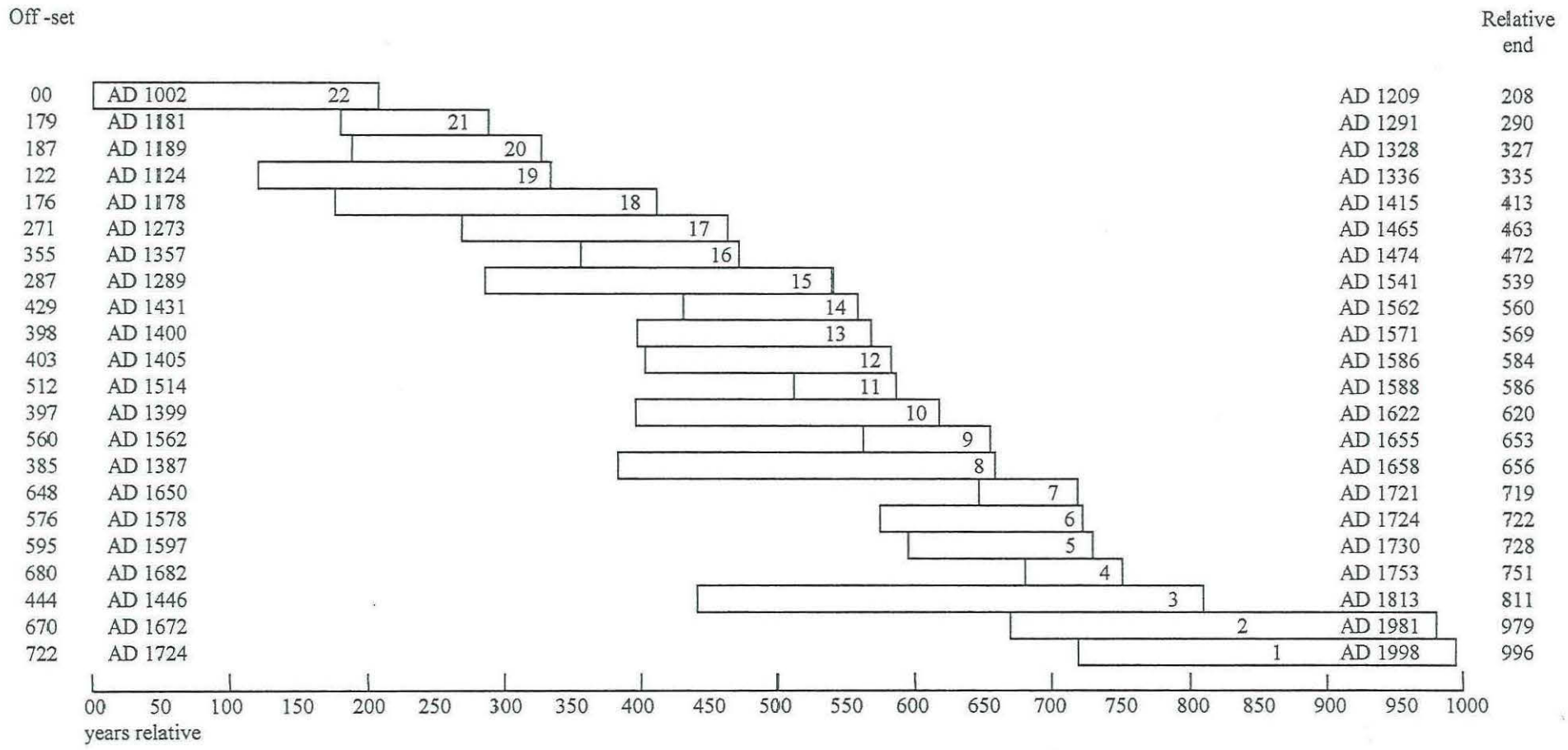

It can be seen from the bar diagram and the key that there is less data available for Warwickshire after about AD 1540 and less still after about AD 1700is area after about AD 1700. To remedy this, and to anchor the local chronologies in the modern period, it would be necessary to obtain more samples from modern trees in the area to date a number of other buildings that contain samples spanning the seventeenth, eighteenth, and early nineteenth centuries.

Key for bar diagram, Figure 31

	Reference chronology	Number of rings	Date span
1	GLOMSQO1, Gloucestershire	275	AD 1724 – 1998
2	FOR-DEAN, Gloucestershire	310	AD 1672 – 1981
3	Stoneleigh Abbey, Warwicks (stables)	168	AD 1446 – 1813
4	Stoneleigh Abbey, Warwicks (laundry)	72	AD 1682 – 1753
5	Worcester Cathedral (2)	134	AD 1597 – 1730
6	Daneway House, Bisley, Gloucestershire	147	AD 1578 – 1724
7	Lodge Park, Aldsworth, Gloucestershire	72	AD 1650 – 1721
8	Stoneleigh Abbey, Warwicks (Gatehouse 1)	272	AD 1387 – 1658
9	Oakwell House, West Bromwich	94	AD 1562 – 1655
10	26 Westgate Street, Gloucester	224	AD 1399 – 1622
11	Blakesley Hall, West Midlands	75	AD 1514 – 1588
12	Stoneleigh Abbey, Warwicks (Gate doors)	181	AD 1405 – 1586
13	Stoneleigh Abbey, Warwicks (E wing roof)	172	AD 1400 – 1571
14	High St, Kinver, Worcestershire	132	AD 1431 – 1562
15	Mercers Hall, Gloucester	253	AD 1289 – 1541
16	BINTON, Warwickshire	118	AD 1357 – 1474
17	WORCESTE, Worcestershire (1)	193	AD 1273 – 1465
18	DROITWIC, Worcestershire	238	AD 1178 – 1415
19	Stoneleigh Abbey, Warwicks (Gatehouse 2)	213	AD 1124 – 1336
20	COVENTRY, Warwickshire	140	AD 1189 – 1328
21	Worcester Cathedral	111	AD 1181 – 1291
22	Sandwell Priory, West Midlands	208	AD 1002 – 1209

Figure 32: Bar diagram to show the relative off-set positions of the dated site chronologies

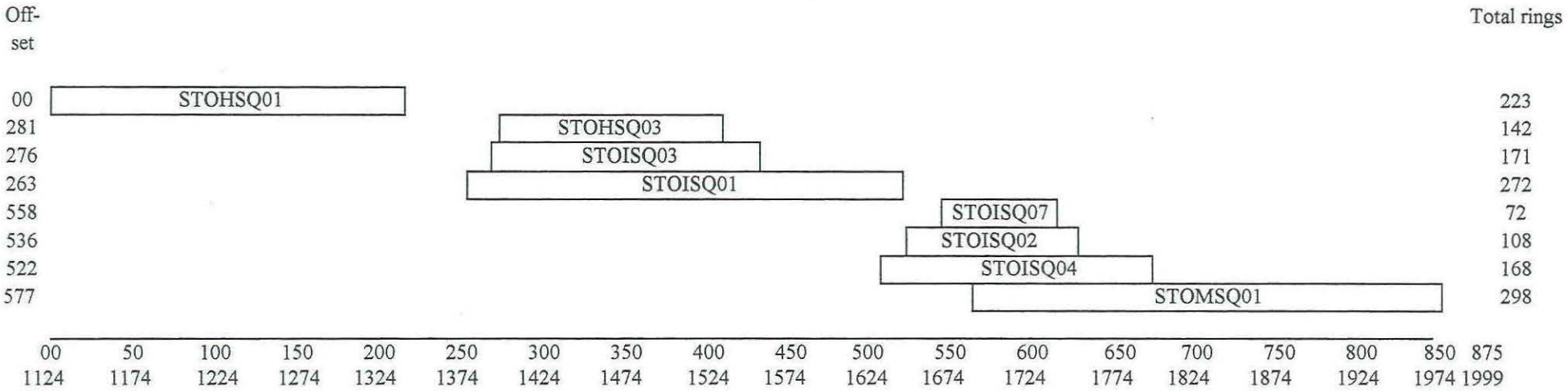

Site chronology	Sample area	Number of samples	Number of rings	Start date	End date
STOHSQ01	Gatehouse roof, posts, ceiling	14	223	AD 1124	AD 1346
STOHSQ03	Gateway doors	5	142	AD 1405	AD 1546
STOISQ03	East wing roof	15	171	AD 1400	AD 1570
STOISQ01	Gatehouse bench, party wall, stairs, joists	19	272	AD 1387	AD 1658
STOISQ07	Laundry roof	3	72	AD 1682	AD 1753
STOISQ02	Gatehouse 2	2	108	AD 1660	AD 1767
STOISQ04	Stables roof	29	168	AD 1646	AD 1813
STOMSQ01	Living trees	20	298	AD 1701	AD 1998

Figure 32: Bar diagram to show the relative off-set positions of the dated site chronologies

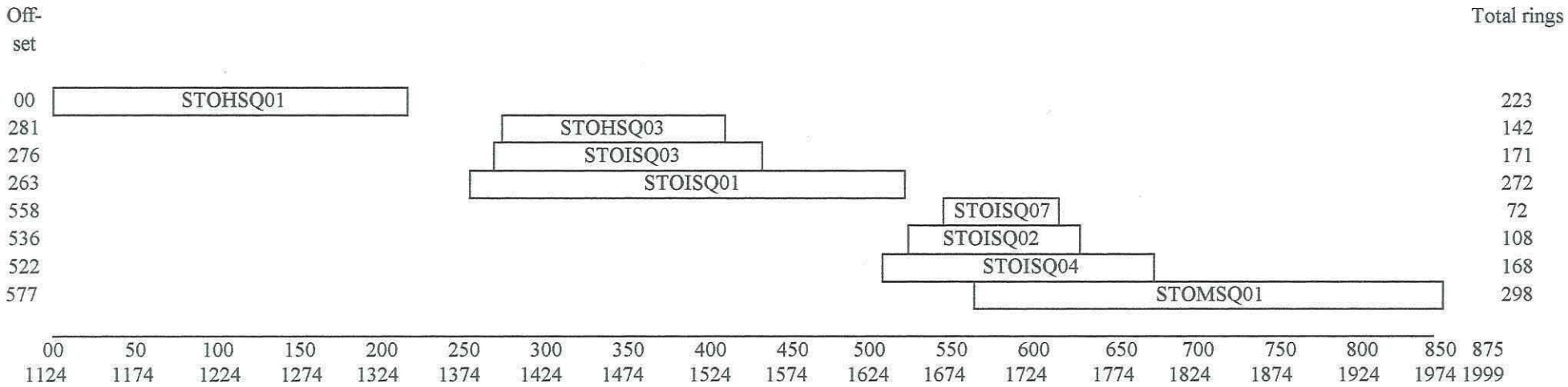

Site chronology	Sample area	Number of samples	Number of rings	Start date	End date
STOHSQ01	Gatehouse roof, posts, ceiling	14	223	AD 1124	AD 1346
STOHSQ03	Gateway doors	5	142	AD 1405	AD 1546
STOISQ03	East wing roof	15	171	AD 1400	AD 1570
STOISQ01	Gatehouse bench, party wall, stairs, joists	19	272	AD 1387	AD 1658
STOISQ07	Laundry roof	3	72	AD 1682	AD 1753
STOISQ02	Gatehouse 2	2	108	AD 1660	AD 1767
STOISQ04	Stables roof	29	168	AD 1646	AD 1813
STOMSQ01	Living trees	20	298	AD 1701	AD 1998

Data of measured samples STO-H01 – H20 from the gatehouse,

Measurements in 0.01 mm units

STO-H01A 95
126 81 148 181 147 97 189 246 175 151 122 83 78 85 118 139 167 193 303 369
236 136 133 129 164 186 204 143 149 153 162 173 189 164 142 190 167 151 153 150
128 153 165 119 93 109 142 126 170 171 268 217 152 149 197 137 184 152 121 103
82 90 121 119 141 138 110 124 154 135 130 202 122 116 136 107 132 109 114 155
102 109 81 88 124 133 162 144 196 181 176 193 180 165 199
STO-H01B 95
127 96 138 182 147 89 177 248 175 157 106 99 78 79 137 111 186 196 302 362
239 126 136 134 163 184 202 148 130 127 182 189 173 141 138 166 168 161 148 142
107 139 176 119 102 103 131 131 162 168 272 217 128 131 171 152 181 153 119 105
79 86 120 112 145 131 115 124 146 155 140 190 120 119 125 113 127 117 119 145
100 106 84 84 123 125 156 160 184 192 170 183 182 144 205
STO-H02A 99
364 380 302 288 284 228 155 112 134 135 139 85 98 128 113 87 67 64 70 72
54 56 52 71 58 49 85 56 54 52 80 51 58 41 39 52 53 62 63 60
63 55 75 76 91 55 109 99 94 81 78 80 87 68 82 78 86 94 97 86
95 84 159 152 125 124 133 133 110 172 229 161 142 127 201 173 186 115 131 150
133 187 214 152 179 312 149 147 179 179 231 180 170 165 200 184 166 148 186
STO-H02B 99
367 381 302 270 277 227 161 107 140 129 145 87 95 134 110 75 64 66 69 68
61 53 51 72 59 49 82 67 52 55 72 52 56 50 39 54 59 58 63 67
58 48 75 76 87 58 113 100 91 80 78 82 80 82 68 74 85 91 102 87
93 82 153 160 136 139 129 132 121 187 236 171 134 126 214 190 167 143 166 149
145 180 208 162 181 316 154 149 185 181 227 183 171 169 191 171 182 178 196
STO-H03A 96
234 86 102 78 89 115 144 161 157 186 226 174 80 63 64 68 64 51 48 64
70 41 53 36 38 37 34 55 84 71 72 64 70 59 97 81 91 81 109 143
127 112 116 154 129 64 57 121 110 136 163 161 74 79 115 169 152 119 93 138
178 125 240 236 246 167 231 202 214 186 216 165 134 152 162 134 136 185 76 102
147 151 126 146 150 141 127 124 119 148 176 168 124 88 115 184
STO-H03B 96
247 87 98 86 83 107 152 161 158 186 217 182 82 56 69 76 61 44 48 68
62 41 60 34 43 36 36 52 73 86 69 78 75 62 100 90 93 74 108 150
126 127 118 168 130 57 50 130 108 129 163 153 74 74 115 170 150 133 84 135
175 132 229 243 237 179 227 197 212 184 213 151 134 167 159 139 140 172 88 105
143 148 129 143 164 122 138 138 107 130 177 158 105 116 113 178
STO-H04A 83
243 201 226 147 158 107 129 161 171 179 212 215 142 124 182 254 232 205 114 137
131 131 265 151 93 56 62 50 47 64 69 96 101 108 164 138 113 79 85 125
124 63 86 95 51 42 43 56 77 65 64 64 54 60 58 92 60 66 52 70
77 58 60 48 76 57 60 63 69 74 74 65 101 77 95 96 64 74 73 51
30 33 54

STO-H04B 83
212 202 229 150 165 104 134 177 177 197 204 196 140 122 198 258 231 196 115 134
130 131 262 152 92 59 58 48 44 66 70 93 94 113 155 140 116 74 91 120
131 60 89 90 52 43 42 58 73 61 67 60 60 49 59 91 76 64 54 68
65 63 54 57 62 61 58 66 66 72 60 76 91 80 106 89 78 64 64 53
29 33 59
STO-H05A 153
262 438 539 369 447 400 313 262 276 275 212 196 212 167 198 183 165 255 315 170
197 254 302 148 260 225 155 104 86 84 76 85 111 122 108 100 109 90 86 86
109 66 93 56 127 86 78 162 113 161 180 122 140 142 140 132 211 126 150 116
122 141 169 180 216 263 190 231 241 171 113 139 134 176 212 135 202 126 174 174
127 153 160 107 151 132 146 118 127 127 66 136 108 125 183 164 136 95 83 98
109 110 122 140 102 116 61 137 145 116 146 131 174 131 112 89 99 93 160 203
176 165 150 146 161 146 114 104 147 174 159 201 209 193 185 137 153 167 123 116
119 140 86 116 156 141 141 103 106 110 108 117 128
STO-H05B 153
286 450 518 474 444 376 330 275 273 277 204 190 202 172 201 183 175 258 317 185
201 253 268 140 267 243 153 92 82 84 95 78 118 131 123 102 95 79 80 70
108 76 97 69 138 100 69 179 94 147 177 117 121 144 153 138 197 137 139 116
133 128 158 173 177 251 198 228 232 184 112 141 127 168 219 145 171 120 185 161
129 146 163 108 149 145 153 108 127 124 78 96 117 117 176 164 122 82 82 103
105 110 117 139 118 123 50 127 142 134 138 115 191 130 90 95 97 91 174 192
175 155 151 167 155 148 115 102 152 179 166 195 207 194 158 167 163 158 140 113
100 134 84 117 155 136 134 107 101 107 107 103 133
STO-H06A 126
150 215 286 203 209 114 132 111 197 140 267 433 322 158 143 103 72 70 55 96
194 131 150 139 133 109 129 147 127 121 166 122 136 249 195 211 154 117 98 144
169 124 162 106 91 84 74 155 111 113 94 122 107 157 202 220 143 190 198 203
219 196 148 144 106 138 144 182 141 145 70 95 75 109 106 136 109 105 123 102
92 97 103 99 88 84 88 83 121 112 136 162 122 113 92 51 76 72 112 91
88 102 80 65 62 85 51 32 30 44 64 42 52 63 61 80 80 121 117 120
131 81 106 82 91 134
STO-H06B 126
193 217 292 208 202 123 134 104 198 143 264 437 319 149 143 99 67 67 56 85
197 132 148 144 132 102 136 149 130 119 163 130 133 244 210 214 155 106 98 160
183 126 148 100 92 90 79 150 120 112 103 118 132 142 212 212 150 179 207 199
226 205 158 158 107 143 145 184 126 152 66 107 73 106 102 147 109 107 116 105
99 98 102 100 81 90 85 89 117 124 145 151 116 120 82 50 77 76 102 91
88 107 76 71 61 87 47 31 27 42 56 45 54 62 65 81 77 134 122 143
135 103 105 76 113 137
STO-H07A 132
139 129 148 123 151 174 171 206 181 138 124 137 209 124 202 176 218 157 130 277
158 165 241 163 195 150 144 184 219 183 192 188 172 156 191 173 164 197 161 254
194 240 142 130 146 183 174 157 220 111 165 151 145 161 228 118 210 182 186 96
135 124 74 130 136 125 180 156 135 99 77 100 127 113 106 155 153 159 104 152
222 253 199 164 222 183 210 136 139 122 253 317 222 239 205 176 201 299 205 180
205 240 145 239 261 206 164 157 179 183 150 168 197 199 112 175 230 257 254 179
184 170 168 184 119 158 112 100 117 121 128 134

STO-H07B 132
188 129 137 132 152 170 175 206 202 141 117 142 205 118 170 165 232 173 124 281
152 169 230 161 204 159 142 183 223 178 187 189 147 168 184 176 166 205 169 243
210 232 149 127 150 213 215 160 218 143 169 156 139 183 210 134 201 176 172 110
127 129 85 142 145 134 174 138 149 103 80 101 126 103 117 147 156 156 105 147
233 255 181 160 220 189 198 140 134 120 250 301 216 237 212 203 205 299 207 157
215 249 142 237 267 205 155 160 189 175 156 166 195 188 122 181 225 255 257 174
184 165 178 170 133 123 138 100 105 124 127 133
STO-H08A 143
304 312 245 102 65 39 78 103 109 128 202 153 228 106 115 147 101 133 174 104
123 152 104 66 107 65 66 40 71 49 65 100 54 68 63 62 73 61 105 64
71 72 80 80 73 42 44 46 72 91 80 53 47 65 81 48 40 41 58 53
56 42 60 42 148 122 87 104 114 68 92 86 60 61 70 58 37 43 40 37
56 33 42 40 58 67 56 54 55 46 36 67 30 64 111 135 118 110 97 93
91 124 77 55 64 65 91 75 84 74 59 87 39 50 116 186 218 180 186 223
180 200 204 207 157 151 117 104 68 79 79 83 92 127 80 74 79 52 83 71
95 78 82
STO-H08B 143
315 316 236 105 66 37 68 117 107 121 210 146 225 111 100 143 104 129 125 100
107 163 109 70 99 71 61 48 77 44 61 95 65 67 58 57 73 68 103 65
69 75 85 76 78 41 42 53 78 85 77 59 44 70 75 53 37 47 54 55
48 43 57 49 145 121 92 95 121 60 87 86 68 52 65 54 43 41 44 35
46 43 47 28 57 68 46 62 48 47 41 60 40 58 110 139 118 103 106 94
102 117 83 54 69 63 87 75 91 67 59 86 46 50 116 180 221 174 195 229
172 210 201 204 159 134 128 109 64 80 80 76 99 116 97 67 74 54 92 73
92 69 82
STO-H09A 141
162 173 233 315 425 341 469 511 398 205 176 229 287 183 286 288 213 213 159 173
156 161 198 166 258 153 158 175 175 140 112 113 135 97 129 123 155 198 159 198
211 198 147 121 138 137 168 144 195 117 180 164 96 104 137 99 106 117 100 76
137 125 90 74 63 72 93 60 63 38 69 71 82 94 85 93 87 85 37 67
82 75 92 87 102 94 70 77 76 64 82 77 54 56 55 40 53 58 60 56
113 128 173 136 167 208 163 81 97 99 78 123 147 140 144 205 182 167 203 196
177 137 132 147 137 186 156 175 132 138 83 136 142 97 175 101 135 110 129 128
209
STO-H09B 141
231 195 219 311 411 293 461 506 385 214 172 233 297 190 307 286 217 217 150 195
157 169 190 160 241 149 146 176 182 156 127 138 112 89 135 131 150 204 152 192
248 193 139 121 144 135 168 152 210 121 169 139 91 103 148 86 118 113 108 73
138 127 93 76 61 75 87 61 58 36 72 71 80 96 89 100 73 86 50 67
80 85 83 78 105 94 65 83 91 48 83 95 61 57 47 48 50 64 56 58
106 123 166 151 172 198 163 69 104 107 71 127 146 121 127 211 188 174 196 199
156 126 135 147 128 186 158 161 121 125 79 136 146 100 184 95 140 109 145 125
182
STO-H10A 121
223 130 114 97 126 193 150 231 155 265 214 89 87 81 111 122 153 137 186 160
259 168 192 179 240 163 263 231 218 147 235 142 104 118 120 162 203 122 188 89
196 271 168 189 196 157 124 164 65 100 189 236 276 189 230 161 97 108 79 69
85 93 127 118 83 78 94 106 61 72 149 219 221 252 396 360 290 308 314 276
286 256 209 183 132 122 121 162 155 187 168 125 120 95 100 124 172 173 155 128
104 109 102 124 80 79 75 70 51 80 79 64 63 87 91 88 92 49 100 64 104

STO-H10B 121
215 129 120 105 115 199 146 228 143 247 190 105 88 73 105 132 151 141 189 152
239 188 211 166 242 174 264 248 209 160 209 159 109 115 131 168 202 128 164 102
184 268 155 197 201 152 116 159 74 96 175 241 252 172 236 162 93 107 88 75
82 103 130 118 101 85 88 105 67 66 139 211 232 248 402 352 290 321 295 288
290 259 211 188 135 127 134 153 154 201 205 130 129 86 100 128 182 172 150 144
115 105 118 118 88 72 71 67 56 70 77 78 64 85 78 90 103 63 84 72
110
STO-H11A 123
237 149 148 146 174 139 197 147 141 127 117 152 164 109 80 117 99 103 155 76
112 120 128 118 82 58 42 43 53 40 88 57 109 77 71 64 80 82 91 67
84 90 56 40 51 53 53 75 83 59 79 50 42 34 21 51 43 54 61 55
44 27 31 33 32 48 61 73 102 74 74 64 72 75 82 90 82 84 65 68
72 89 50 49 63 68 73 115 104 89 75 83 102 93 78 80 124 115 74 101
134 134 128 138 95 84 98 114 103 100 99 139 122 115 92 105 90 101 120 145
113 64 71
STO-H11B 123
227 153 147 146 173 136 200 140 158 132 118 144 156 112 87 115 110 108 132 81
106 124 129 109 93 58 46 46 47 42 87 52 114 76 70 58 83 81 88 68
81 93 70 41 40 61 58 72 83 67 74 53 40 31 24 52 49 51 66 63
40 37 25 39 37 42 60 74 103 81 65 65 77 76 78 96 80 79 67 65
76 88 43 62 64 69 78 110 93 92 77 78 111 91 81 77 117 121 72 103
149 128 119 132 91 97 93 112 99 103 101 139 97 126 98 106 88 115 120 148
127 83 92
STO-H12A 83
158 105 123 162 162 162 169 132 116 132 88 114 118 123 108 135 104 104 90 151
151 137 151 161 131 133 131 85 120 161 242 290 223 253 175 129 87 102 99 97
146 119 97 85 97 114 110 78 77 132 136 143 198 232 295 244 228 173 141 122
131 135 136 82 116 141 124 152 145 129 134 110 91 76 116 143 170 188 152 175
138 153 151
STO-H12B 83
146 113 100 190 159 162 173 144 97 122 96 117 111 125 107 131 116 105 86 163
165 119 158 153 136 136 122 85 115 158 232 300 226 255 168 128 91 111 101 99
158 104 108 84 98 122 106 75 72 136 138 160 186 239 300 242 227 176 138 129
126 146 131 85 95 144 136 166 147 118 149 113 75 85 134 146 170 190 147 165
134 155 144
STO-H13A 128
83 98 150 163 81 131 146 171 128 135 134 106 124 218 130 165 142 177 92 133
97 87 83 115 125 148 137 106 102 110 121 138 109 134 90 85 111 126 107 102
89 78 72 84 85 90 114 115 97 116 77 75 57 55 62 78 65 74 67 62
55 56 79 61 55 50 50 37 21 33 22 24 30 34 60 51 37 22 38 30
31 33 30 30 32 37 29 25 19 39 58 73 61 81 66 66 62 80 71 104
105 111 119 80 71 45 55 52 52 66 82 80 112 131 81 93 80 77 81 62
80 89 93 66 83 83 101 121
STO-H13B 74
109 98 152 157 89 134 131 178 121 133 132 109 118 211 137 174 141 175 101 124
97 85 72 128 122 156 125 110 100 105 127 129 108 134 101 80 117 109 124 98
90 81 71 97 80 98 120 112 103 107 81 76 50 50 60 77 70 75 65 54
66 54 68 72 51 56 47 33 23 29 33 25 32 39

STO-H13C 47
34 34 28 38 34 34 22 40 52 67 80 69 85 63 62 64 81 83 91 111
111 113 76 60 53 62 37 53 72 95 76 102 114 91 83 94 61 78 65 70
99 93 57 71 93 114 95
STO-H14A 110
117 146 200 160 207 190 116 285 195 236 175 143 190 165 151 221 165 170 165 122
176 167 124 98 108 122 93 104 100 122 128 107 142 149 99 58 52 58 58 56
44 54 44 46 51 54 46 44 47 90 76 47 40 40 42 31 51 67 74 72
63 37 28 27 29 36 43 42 43 29 28 40 74 123 163 150 145 229 157 147
122 107 110 100 113 89 97 65 67 75 78 40 43 68 90 143 209 256 268 241
272 422 286 297 273 367 408 289 228 481
STO-H14B 110
113 136 195 183 211 168 97 280 189 237 171 144 189 168 151 223 164 171 173 113
184 176 104 98 97 118 97 101 108 123 126 112 140 139 92 50 37 67 52 64
35 54 35 46 50 51 63 51 51 76 74 46 41 41 41 35 50 69 75 69
77 31 35 37 23 41 36 44 45 29 32 36 81 112 178 143 142 241 153 161
125 120 107 96 109 94 98 67 71 67 82 39 47 66 88 144 210 256 267 217
237 414 313 304 246 340 406 289 242 461
STO-H15A 60
354 307 210 406 295 299 208 172 138 185 301 283 237 308 247 248 228 134 110 319
328 213 294 333 276 246 258 262 203 212 100 102 142 80 177 180 241 278 190 143
158 145 154 91 164 246 226 167 158 226 199 222 217 200 174 175 152 184 221 309
STO-H15B 60
335 308 215 413 297 299 176 164 129 176 288 263 231 296 259 232 228 133 121 303
281 233 287 340 269 226 269 261 204 218 83 101 139 84 141 175 238 295 196 144
148 143 155 91 172 241 231 160 170 201 186 226 204 203 169 178 149 168 220 289
STO-H15C 57
411 321 385 439 392 320 278 318 244 271 254 212 170 105 147 169 219 209 183 125
155 157 175 84 176 254 269 230 221 254 316 275 263 248 210 220 150 189 259 260
252 221 205 266 239 222 145 141 169 274 253 199 217 207 173 231 339
STO-H16A 121
414 238 303 238 217 276 319 284 183 225 151 89 100 253 247 104 350 271 359 212
144 186 124 134 198 218 190 159 132 108 130 123 92 58 162 105 195 119 92 128
86 104 100 73 71 78 58 87 97 56 47 47 57 58 56 77 102 136 107 78
81 61 40 36 32 48 60 43 58 45 40 50 60 54 46 63 104 74 59 42
38 44 39 51 76 60 55 44 26 22 23 20 29 25 29 25 37 39 55 103
131 119 117 165 115 130 127 119 131 121 159 139 110 93 85 81 116 65 65 103
114
STO-H16B 121
390 245 289 233 250 311 316 281 167 210 147 92 98 250 251 97 352 267 348 216
145 192 132 135 193 226 198 162 122 121 128 121 92 67 163 112 195 122 85 134
89 107 101 73 68 83 56 87 96 52 53 44 55 59 60 78 96 138 100 78
86 60 36 39 36 42 60 49 61 43 38 45 70 45 45 65 100 88 59 37
30 44 38 50 78 59 61 47 21 22 20 26 26 55 28 19 23 35 47 108
130 126 119 163 118 133 119 118 125 126 152 149 103 92 71 87 124 45 64 96
115
STO-H17A 111
323 238 295 231 208 268 167 212 163 182 207 159 140 162 169 170 131 135 175 195
193 150 159 179 140 77 71 58 94 110 89 122 95 107 137 89 76 148 97 153
176 132 77 95 88 83 95 112 122 146 133 107 78 133 224 320 306 264 238 169
180 130 122 133 154 140 100 146 91 68 80 93 84 138 204 208 242 160 197 194

228 134 123 203 184 158 296 294 246 234 212 193 150 110 179 263 187 113 148 130
134 145 101 83 98 96 117 61 104 165 155
STO-H17B 111
306 242 297 217 222 247 166 202 163 165 228 143 128 164 171 176 130 135 168 188
180 164 156 179 128 73 82 59 84 106 95 131 86 102 130 89 84 150 93 152
176 137 71 92 92 78 105 101 126 148 138 115 76 127 227 323 310 272 240 169
185 126 126 133 155 143 94 151 95 80 72 99 83 142 215 210 240 167 187 217
208 140 130 207 183 168 303 258 246 224 183 198 145 116 171 270 183 107 140 145
147 138 94 93 94 101 109 64 110 166 162
STO-H18A 66
270 279 233 351 216 275 333 232 173 164 133 169 130 137 112 82 83 108 82 148
123 124 142 104 132 137 126 153 181 221 138 75 121 153 175 193 238 239 241 226
148 125 122 88 118 108 93 122 147 121 115 113 136 192 252 244 153 181 114 133
201 204 336 293 237 336
STO-H18B 66
308 285 233 346 209 280 335 223 174 144 138 158 129 136 129 75 87 138 84 142
128 117 138 113 137 146 140 158 180 230 124 81 113 157 175 194 235 209 269 202
152 137 115 90 104 102 93 128 129 124 119 103 153 189 261 263 159 162 123 134
226 197 346 296 229 286
STO-H19A 133
396 351 168 195 248 148 249 183 160 219 204 247 182 167 234 198 243 282 151 171
133 124 144 181 217 252 198 201 225 156 141 144 175 166 124 181 173 103 115 94
79 93 103 134 118 133 102 104 107 107 113 130 131 87 104 103 43 38 66 93
56 106 91 117 112 118 98 103 104 158 97 149 126 100 90 112 73 77 59 112
109 99 88 76 105 112 129 139 153 108 122 114 148 192 191 138 117 133 119 144
192 224 262 193 170 192 120 113 104 77 95 152 123 168 132 96 99 86 115 115
100 92 91 103 77 93 84 57 84 97 81 90 91
STO-H19B 133
381 344 171 196 256 154 239 182 159 209 199 243 188 157 227 213 241 283 171 169
110 132 148 178 215 257 198 194 237 162 136 144 173 156 124 184 178 101 114 98
79 90 105 130 125 129 116 100 101 101 121 134 136 84 107 94 47 48 71 80
62 89 95 119 117 107 100 106 98 159 99 147 127 99 85 116 64 77 66 99
105 102 97 84 95 98 132 140 144 127 118 109 121 177 169 143 116 126 101 156
190 239 274 200 160 186 121 115 104 89 93 139 125 165 120 98 91 99 103 118
94 111 76 108 68 88 87 57 79 98 84 87 105
STO-H20A 75
214 267 145 276 448 438 418 428 287 228 249 105 154 214 269 269 206 463 273 209
185 181 161 192 298 289 242 311 284 239 254 173 136 354 265 232 324 436 399 371
348 355 299 284 223 153 132 75 157 168 216 253 173 169 199 176 197 121 232 282
292 282 240 307 343 280 250 271 217 198 135 242 270 264 266
STO-H20B 75
221 268 153 268 407 410 462 413 369 252 273 109 138 206 279 233 188 445 286 262
195 182 165 196 314 296 272 313 290 224 244 180 165 347 290 231 312 402 412 350
327 362 294 289 206 152 136 83 140 174 207 272 168 171 185 155 197 127 225 292
323 277 265 286 379 293 268 256 190 192 150 252 294 258 233

Data of measured samples STO-M01 – 25 from living trees

Measurements in 0.01 mm units

STO-M01A 80
139 191 259 207 237 167 218 228 242 278 178 188 186 258 291 211 297 262 295 179
191 173 201 176 129 170 242 173 139 105 180 207 195 203 94 60 126 129 154 152
144 111 119 113 100 91 174 76 65 62 82 78 57 80 128 163 101 84 98 82
95 128 84 84 73 71 54 65 42 41 45 50 38 48 63 43 43 43 51 36
STO-M01B 80
197 165 254 226 226 166 231 223 236 278 176 175 199 257 302 216 278 264 299 174
184 160 210 170 145 173 229 180 135 104 186 208 195 206 73 74 131 131 148 150
145 114 109 104 122 102 154 76 74 54 86 72 58 84 131 174 82 100 97 84
93 126 80 84 79 61 51 64 37 47 56 49 31 36 69 48 48 36 48 41
STO-M02A 96
376 458 280 327 296 429 266 348 350 468 358 363 380 398 496 452 401 241 354 317
173 308 336 426 298 290 355 429 362 210 216 165 276 259 419 159 241 240 397 226
256 174 301 289 404 263 268 203 201 232 182 280 216 238 215 288 292 338 149 237
171 211 199 219 232 191 256 206 319 204 200 138 129 123 214 199 197 236 199 247
224 237 315 312 268 288 268 251 310 137 195 218 269 203 250 250
STO-M02B 127
319 294 274 395 302 276 340 311 316 228 148 114 181 227 283 215 258 277 300 254
272 313 229 334 289 311 223 249 320 279 252 294 293 131 196 166 256 169 261 206
258 214 249 257 273 315 309 234 153 248 141 95 182 223 303 242 201 244 276 306
215 203 162 215 183 278 132 155 177 257 179 217 139 244 240 274 226 228 261 246
245 183 219 273 169 208 260 269 352 167 226 187 220 154 154 168 146 158 172 183
111 115 111 79 76 104 136 142 142 87 108 127 105 101 117 80 83 69 93 144
136 159 103 98 92 109 121
STO-M03A 69
421 846 656 649 621 557 496 640 291 560 586 575 386 430 491 606 430 612 422 429
568 483 540 486 327 371 317 323 602 474 585 419 590 375 405 429 389 432 322 325
467 531 457 495 358 365 267 373 608 624 786 476 576 427 533 433 365 548 409 453
428 492 576 480 403 338 499 505 555
STO-M03B 74
529 612 977 424 419 388 497 486 440 423 608 735 816 322 487 455 352 273 282 376
414 395 420 253 324 431 297 312 267 262 347 288 312 597 460 492 342 463 392 454
353 447 306 272 332 441 421 286 469 336 347 213 238 426 431 513 305 454 316 363
346 339 280 260 416 406 443 561 444 440 342 411 347 628
STO-M04A 123
505 663 425 430 566 540 386 163 277 290 297 285 455 359 244 312 418 401 269 230
262 199 282 217 294 453 327 248 257 264 179 302 205 419 170 238 192 130 216 248
136 259 505 151 181 99 68 132 127 212 253 240 152 193 293 181 194 193 137 183
387 226 192 145 104 95 85 66 69 189 185 174 117 86 106 121 104 103 62 60
57 42 73 135 127 101 161 117 131 95 111 110 96 116 126 118 106 135 94 153
133 128 248 219 282 154 209 186 158 275 271 206 183 234 153 299 255 211 203 191
193 228 193

STO-M04B 144
531 460 677 596 431 477 581 498 268 424 678 329 562 471 424 450 506 481 479 500
712 517 517 651 560 369 195 302 408 312 303 425 379 257 311 138 117 183 209 113
134 130 132 111 178 317 305 199 205 217 148 71 115 228 126 149 150 98 211 150
94 136 253 104 92 84 58 133 114 199 189 199 116 119 292 179 181 235 138 144
231 226 202 122 98 160 129 118 94 107 164 124 239 124 93 100 114 100 103 52
68 71 73 83 162 144 98 185 111 157 99 112 126 77 92 80 127 101 151 106
112 120 94 204 138 210 189 156 161 147 247 324 292 320 403 377 230 142 130 201
162 170 280 240
STO-M05A 210
154 171 186 180 117 164 159 278 148 209 274 213 231 211 137 99 231 279 331 187
251 364 249 211 218 245 194 212 211 293 302 155 218 147 256 188 152 176 159 137
268 388 181 232 324 410 245 325 275 306 299 236 188 203 298 224 201 169 194 274
323 268 240 306 183 217 131 318 236 207 147 164 188 218 159 127 186 184 157 171
125 120 116 113 113 125 90 229 134 199 154 188 112 68 71 81 92 134 139 167
85 155 107 127 120 132 123 254 157 233 117 181 248 200 177 163 168 90 128 85
188 89 117 129 61 63 45 56 57 79 62 45 38 34 74 60 107 68 53 80
67 126 100 97 70 52 77 135 99 147 152 88 90 89 50 103 105 69 76 61
60 66 46 58 51 37 32 33 26 40 62 96 53 80 58 93 56 81 76 64
56 76 105 43 117 62 69 63 70 107 107 166 90 137 72 63 137 111 120 125
70 70 144 103 97 61 51 53 78 102
STO-M05B 216
240 319 215 286 315 166 156 368 410 305 381 313 187 242 309 316 186 261 289 182
196 219 152 130 210 231 287 222 198 316 205 182 170 220 186 149 181 204 216 145
202 155 386 302 221 231 227 159 279 352 141 259 235 227 226 251 235 255 264 179
109 154 223 235 145 99 221 227 213 242 124 241 178 250 103 215 230 159 175 195
160 153 148 132 141 128 131 125 123 89 125 100 121 142 108 188 157 140 148 136
109 67 87 90 133 139 115 135 153 67 119 96 128 89 127 108 115 87 112 159
107 120 122 124 66 78 50 135 65 124 124 128 133 108 114 113 132 46 35 36
31 67 36 88 63 44 102 104 116 97 102 47 42 37 83 52 51 84 73 40
40 48 76 44 45 70 56 51 35 41 40 69 32 54 60 44 54 88 47 57
44 93 52 92 68 79 83 112 110 46 108 59 85 46 57 144 120 140 75 88
65 36 108 60 47 77 59 37 75 32 50 31 19 27 37 40
STO-M06A 210
300 203 234 304 298 446 463 662 338 399 468 447 401 427 323 246 413 416 487 501
487 469 595 598 432 383 485 407 254 267 359 423 301 242 464 438 493 367 178 334
490 449 480 393 345 374 362 314 307 338 352 326 268 202 284 258 176 212 585 259
299 290 216 256 199 216 114 157 126 199 163 213 124 170 96 183 141 198 156 178
132 127 113 167 145 144 117 170 169 165 166 152 122 50 85 109 112 115 124 95
63 95 86 94 80 100 58 157 82 151 125 99 126 99 82 121 101 40 68 66
124 86 64 72 53 65 55 64 76 88 91 81 73 63 45 70 152 130 126 114
89 120 54 158 118 69 83 101 113 120 110 92 95 65 113 93 115 135 156 95
78 102 92 163 70 96 104 62 71 91 94 114 119 94 134 149 93 46 35 32
22 19 33 34 37 41 31 41 72 86 138 167 180 110 92 72 176 110 118 69
87 66 119 116 167 117 87 76 111 130
STO-M06B 208
710 602 500 416 388 511 333 327 398 298 398 409 372 203 357 454 521 506 705 602
577 607 498 440 548 405 165 303 256 242 235 199 427 260 302 273 144 236 333 414
452 443 317 484 456 390 328 358 427 344 272 180 314 246 191 224 530 251 341 334
242 315 306 299 185 197 236 277 256 292 223 254 184 271 211 319 171 243 154 150
134 228 212 191 140 256 232 213 288 214 167 81 131 124 108 124 184 141 74 198

168 147 152 133 63 44 55 95 67 84 84 101 111 143 89 60 93 73 141 86
89 68 88 91 76 54 86 114 85 58 49 37 72 72 172 105 96 105 123 122
89 196 122 61 93 147 113 123 103 98 109 81 124 89 87 101 138 91 100 88
116 117 64 105 108 73 68 95 77 134 55 82 67 108 68 100 73 67 52 61
77 78 66 68 58 46 34 61 132 76 65 47 44 30 51 56 59 50 67 98
126 80 68 64 53 46 79 82
STO-M07A 219
210 266 367 288 351 28 39 17 24 100 73 98 91 56 60 148 80 106 110 69
78 79 71 62 64 106 76 117 57 66 55 57 122 210 225 264 281 241 193 188
171 177 378 386 370 405 307 293 350 345 319 352 351 393 563 399 369 453 285 365
411 353 420 386 265 318 421 344 342 441 326 321 328 489 354 355 323 439 304 314
270 359 277 288 285 377 337 393 265 308 222 239 434 276 188 275 213 234 288 251
144 146 148 193 209 130 181 233 131 159 183 197 214 158 105 131 104 124 147 162
181 165 160 271 167 98 117 91 212 106 156 156 154 209 142 116 108 236 109 102
99 89 154 127 165 171 191 148 177 135 88 104 125 66 50 61 156 134 68 146
145 125 92 68 63 138 130 152 90 73 88 100 75 81 76 128 52 95 125 76
108 73 97 100 106 76 93 92 75 86 83 99 77 114 78 141 43 161 204 124
135 76 140 139 110 94 109 108 140 114 140 165 168 207 180 144 100 108 141
STO-M07B 219
191 261 354 257 369 24 37 22 28 99 74 97 87 57 58 149 77 102 118 68
76 85 51 62 69 88 78 126 72 64 46 54 130 216 227 262 271 225 186 185
188 171 370 391 369 402 301 289 342 352 343 347 341 382 566 399 363 446 290 360
397 354 408 391 264 336 429 349 353 452 335 327 344 452 369 328 304 435 262 346
272 357 271 292 283 381 366 389 266 300 213 246 442 278 184 275 218 239 303 242
139 157 148 202 211 128 178 243 120 149 182 189 220 156 109 136 107 114 150 155
191 170 160 271 157 98 116 92 230 98 167 157 154 204 147 124 110 235 104 91
112 89 150 128 167 160 209 145 182 124 93 113 112 67 48 70 158 128 76 149
140 123 98 62 72 131 141 148 84 70 91 99 79 76 80 118 56 94 118 87
106 74 101 95 108 71 93 99 74 83 83 91 83 113 80 134 53 145 202 132
123 80 134 160 111 82 115 108 139 111 126 174 171 211 169 166 97 113 156
STO-M08A 161
187 192 208 187 211 156 133 156 224 269 228 231 123 183 224 316 218 177 207 357
196 179 203 257 223 292 375 463 401 427 404 379 383 473 592 429 318 463 454 390
553 480 231 242 244 376 337 206 199 199 117 178 303 287 354 213 186 207 133 196
153 289 328 295 243 264 232 159 134 146 265 135 127 194 245 289 218 155 121 230
136 124 83 86 196 125 205 223 303 203 138 127 141 124 131 81 67 170 312 239
77 146 189 154 171 166 95 242 217 243 218 125 119 120 124 118 177 172 121 132
253 166 219 136 193 168 127 99 112 106 107 86 90 133 88 146 98 131 62 101
185 196 166 127 198 183 159 175 183 182 215 122 110 263 179 163 157 132 109 111
127
STO-M08B 168
390 476 472 521 370 333 282 343 185 246 201 154 113 186 165 216 224 224 246 113
229 269 315 275 250 223 433 310 324 296 386 386 353 443 489 490 536 325 400 362
395 406 405 287 295 421 294 480 506 275 299 279 351 393 215 250 226 171 175 330
315 355 195 180 207 189 303 213 236 338 313 208 269 262 150 130 171 292 143 136
192 294 301 223 127 133 228 158 121 98 160 203 150 189 160 240 191 147 124 144
121 117 113 76 140 228 281 130 209 266 175 214 168 113 301 207 270 219 180 163
140 138 166 211 189 167 137 265 182 277 210 304 201 150 138 203 141 89 116 143
182 159 203 141 218 93 198 498 405 384 213 359 266 210 210 188 213 205 161 145
224 195 162 186 149 126 119 121

STO-M09A 172
465 477 411 371 298 350 376 428 289 330 300 241 205 197 146 250 214 150 183 309
238 205 219 210 242 296 349 231 250 315 489 405 401 580 628 751 540 481 528 574
662 395 466 376 464 601 536 297 444 388 397 460 470 314 173 125 253 261 220 183
207 134 197 326 299 358 311 172 184 150 171 166 253 377 417 231 372 342 132 142
115 286 139 182 205 219 269 187 151 82 231 92 81 82 59 142 121 102 124 251
216 268 167 92 112 131 71 57 108 164 120 81 164 156 114 128 98 96 240 171
191 116 95 135 109 52 100 88 90 67 75 145 126 125 108 197 151 244 166 186
209 143 154 136 170 136 178 121 119 91 210 171 214 315 194 205 236 165 132 148
162 129 177 152 203 164 200 240 157 148 132 176
STO-M09B 172
469 464 388 373 307 339 362 451 299 320 304 234 194 191 169 235 214 155 189 301
239 204 236 210 234 295 353 223 245 299 473 408 402 590 610 745 551 461 514 562
656 399 467 375 498 605 529 285 431 391 389 459 465 311 168 152 235 269 203 191
216 133 182 328 288 354 313 161 182 156 156 179 255 372 419 247 368 335 142 146
104 288 146 191 204 198 273 197 146 86 219 95 89 73 64 147 112 102 130 256
212 266 156 99 111 133 60 77 98 164 121 83 153 164 114 118 91 101 242 158
173 112 101 135 91 60 103 80 93 66 80 152 129 126 92 186 154 250 170 191
205 133 159 138 168 138 179 117 124 92 202 166 208 317 197 199 233 161 132 146
156 129 168 141 203 168 208 221 147 151 119 163
STO-M10A 171
427 479 592 449 596 592 708 510 465 521 439 299 288 196 216 284 223 224 257 318
256 317 177 344 354 541 358 325 317 494 455 525 541 559 530 538 443 500 511 491
350 371 283 335 394 250 210 269 318 267 325 314 242 99 173 295 273 185 206 263
215 234 330 311 363 255 219 232 171 189 189 218 253 268 187 202 219 180 164 175
198 165 166 182 247 207 166 128 167 150 143 131 117 102 132 126 161 155 219 183
227 209 130 143 115 78 61 99 148 134 108 135 131 131 140 112 104 204 210 193
128 136 137 160 128 120 163 149 90 77 151 145 215 186 173 170 193 156 182 152
123 142 136 152 132 135 134 109 96 174 127 154 130 107 154 114 97 90 112 105
105 112 87 156 119 109 126 129 90 106 135
STO-M10B 165
783 485 353 374 271 168 191 131 127 194 179 183 221 283 188 186 128 234 309 428
259 266 255 337 315 380 340 464 342 420 287 381 386 411 299 270 282 343 426 236
164 311 291 284 314 271 193 125 106 146 164 178 132 169 115 187 265 285 236 212
183 194 178 178 178 239 285 270 171 230 181 171 156 155 187 168 149 174 235 209
175 157 119 187 117 79 134 116 210 159 166 174 166 181 194 194 169 117 148 89
87 193 125 186 89 132 155 141 133 91 107 172 155 155 126 129 154 135 109 101
124 135 89 111 142 164 190 168 140 144 185 118 164 150 110 138 126 155 127 116
138 112 79 176 202 172 164 133 166 143 131 117 121 76 92 100 110 173 110 117
93 90 110 96 170
STO-M11A 164
387 361 460 330 370 341 260 279 218 163 234 280 254 59 98 119 94 128 131 85
141 113 175 120 115 127 191 107 146 210 244 243 231 165 156 147 106 135 110 88
90 63 109 132 173 79 67 73 83 87 117 107 98 88 82 120 110 122 158 89
82 97 103 88 80 109 103 84 101 138 72 66 61 83 61 90 88 108 115 118
76 68 86 85 59 60 74 75 43 90 81 104 139 119 102 88 80 72 43 49
31 59 66 66 93 116 70 78 55 78 93 92 125 78 91 108 142 116 144 119
96 54 62 54 90 91 85 133 137 115 107 127 122 80 113 91 115 129 121 179
109 91 141 220 269 210 175 225 209 152 141 198 245 328 384 361 462 524 478 362
314 354 343 473

STO-M11B 164
429 421 439 369 316 344 245 283 224 184 267 258 263 82 103 95 113 106 140 79
134 108 161 126 130 130 184 104 162 212 241 226 206 170 154 154 107 151 107 84
70 77 103 123 157 88 78 63 74 94 118 107 110 70 88 119 111 119 161 97
87 97 104 75 77 102 96 77 113 134 80 51 68 84 64 79 94 73 155 109
72 70 97 69 66 64 73 76 46 84 66 133 128 117 109 88 79 64 32 56
38 67 63 58 90 107 84 80 59 79 86 94 121 86 75 114 149 113 155 112
94 52 66 52 87 95 81 139 130 131 98 122 125 83 110 84 123 128 121 173
136 87 150 223 274 206 173 231 200 153 145 199 236 330 383 379 441 503 443 356
297 346 346 467
STO-M12A 154
202 352 358 360 209 154 143 205 244 390 218 244 244 363 268 311 315 315 333 402
464 500 462 511 366 323 311 303 268 203 145 273 218 243 231 230 136 105 129 260
306 209 252 230 129 156 256 161 186 218 91 113 97 99 62 129 114 65 63 134
124 69 61 66 59 47 84 63 78 96 79 48 45 29 40 37 30 29 32 22
29 34 40 38 41 44 33 39 22 24 26 24 26 25 24 24 22 26 22 36
39 47 81 43 90 143 109 91 92 61 101 60 121 115 124 152 103 95 106 155
78 112 102 91 94 96 59 53 111 65 102 62 85 143 221 180 152 167 189 92
122 87 98 104 134 80 121 108 124 117 81 66 64 117
STO-M12B 154
208 362 357 368 255 123 145 182 257 373 217 249 244 341 276 322 334 315 329 420
428 484 463 504 364 326 323 299 268 204 169 269 233 231 229 223 136 88 128 260
312 200 273 224 115 162 253 168 193 219 105 104 95 99 73 119 115 66 63 134
135 66 62 66 60 47 84 68 87 94 74 44 43 35 35 33 32 30 30 36
25 28 42 38 41 48 34 29 27 23 25 21 30 23 18 20 29 20 23 24
36 57 62 52 89 144 109 89 85 52 110 60 114 117 129 160 87 100 115 138
87 110 103 94 92 86 74 55 105 79 112 46 83 148 218 191 111 190 202 96
136 83 109 105 127 88 119 107 127 112 80 74 63 112
STO-M13A 157
305 348 380 196 218 321 271 262 211 147 196 346 458 310 344 325 372 293 244 360
464 458 263 194 375 328 523 211 241 161 173 232 184 150 321 241 168 285 224 132
105 180 141 166 121 155 156 83 89 138 147 148 119 90 85 84 86 74 87 84
81 66 75 78 56 64 77 153 43 94 98 145 103 90 82 43 88 47 51 63
42 136 101 141 126 156 141 169 160 87 85 82 61 65 112 149 128 54 113 178
164 134 124 120 372 279 359 275 266 320 289 153 204 221 331 154 156 282 191 354
366 278 243 378 178 462 274 153 160 174 284 187 246 93 123 256 266 214 266 131
291 228 127 122 131 103 164 162 115 147 149 173 142 116 69 74 106
STO-M13B 176
337 314 326 178 181 346 399 394 270 363 444 518 414 356 484 200 126 163 149 222
249 191 221 221 270 312 252 159 233 330 453 275 344 285 359 256 240 278 301 260
202 161 261 240 319 163 200 129 141 76 181 89 199 182 163 222 293 153 127 187
231 154 114 125 165 97 101 146 139 188 170 91 113 97 105 70 111 120 134 98
84 100 62 93 89 138 61 61 87 119 118 94 84 49 61 59 51 36 41 89
69 97 84 150 179 123 93 61 88 65 62 66 139 197 137 81 141 178 163 163
156 89 399 189 222 203 148 197 149 67 120 183 108 101 61 149 118 160 150 134
117 178 82 129 168 102 90 96 105 171 85 44 106 45 224 332 190 168 79 180
182 124 103 87 56 95 93 87 134 142 117 108 134 76 95 108
STO-M14A 129
407 275 522 603 495 338 455 484 416 573 594 335 264 283 437 492 280 326 319 219
214 384 391 420 435 188 256 211 305 288 332 434 292 248 391 438 331 267 215 454
209 309 293 416 333 277 179 221 231 247 289 157 201 312 210 347 283 432 404 350

228 384 271 241 166 160 322 533 316 191 265 188 359 287 271 180 404 281 408 273
304 423 397 341 266 195 297 126 112 168 272 318 201 242 173 230 177 278 214 151
183 230 348 181 280 123 204 339 423 264 374 240 207 349 205 298 237 203 263 212
244 297 269 343 336 281 194 214 532
STO-M14B 129
452 260 508 599 508 334 453 509 403 566 590 340 262 281 417 489 277 292 377 212
205 394 391 434 440 192 258 204 305 285 347 441 297 243 398 409 338 249 209 466
212 307 310 410 309 290 174 241 214 270 272 178 163 336 224 298 290 429 400 356
247 360 287 245 177 154 326 542 326 183 266 204 339 313 263 170 397 314 380 282
322 429 411 319 270 204 289 112 119 203 268 275 232 237 178 224 180 271 163 168
219 218 346 208 279 129 178 357 422 272 370 201 226 377 209 327 209 219 260 231
193 294 284 343 338 299 211 216 514
STO-M15A 303
198 134 167 301 335 354 306 268 307 287 257 174 158 143 132 103 189 203 168 155
213 254 142 155 137 116 118 169 214 243 198 200 155 242 304 349 261 285 237 169
199 178 159 155 112 155 237 190 143 137 120 186 231 237 135 139 164 187 185 146
186 178 208 226 186 165 176 114 124 108 167 189 144 142 140 185 195 165 132 190
315 273 193 142 136 126 104 103 116 94 134 88 61 95 128 120 115 116 128 151
95 126 129 85 102 137 112 105 80 69 74 82 85 66 99 78 86 78 88 89
93 102 88 35 31 24 34 31 22 45 30 29 30 38 39 47 52 44 55 72
65 60 74 91 106 92 95 73 75 71 80 84 94 117 107 94 121 69 93 64
99 91 111 105 100 118 135 123 83 91 132 132 129 79 71 71 75 93 91 78
89 92 93 89 56 86 53 72 90 118 104 136 107 78 113 134 138 85 120 93
150 109 183 165 189 120 103 95 125 149 126 132 110 174 115 165 162 183 162 135
90 82 130 80 96 72 76 104 96 118 132 140 129 102 115 139 166 142 87 74
91 89 116 56 90 101 111 119 131 111 118 84 106 84 87 132 86 88 66 53
58 64 43 50 75 122 106 143 78 154 160 191 181 128 150 136 141 97 123 84
65 90 86 122 181 138 185 160 156 138 156 126 124 117 145 147 128 123 107 85
73 91 125
STO-M15B 303
205 135 170 290 363 323 320 263 312 263 257 173 148 144 132 96 196 203 167 157
217 250 150 173 139 107 121 161 210 240 192 205 149 238 310 350 292 281 253 153
184 184 155 147 123 155 251 170 149 127 136 170 239 228 163 131 148 198 189 148
202 163 209 224 189 157 189 111 131 96 168 200 158 131 136 185 188 170 127 188
308 285 192 153 126 116 109 112 102 101 131 92 62 100 119 116 116 113 130 144
111 130 122 83 104 134 117 108 89 70 67 91 87 77 92 81 77 84 82 98
103 108 79 36 29 24 20 23 31 34 25 23 28 34 32 44 48 53 46 91
67 74 78 74 105 99 91 71 66 75 78 84 76 121 108 100 116 68 98 72
79 97 115 101 108 112 131 140 94 95 143 128 129 71 85 61 91 85 82 84
98 96 96 85 55 81 70 67 70 118 105 131 110 89 110 126 139 82 116 92
156 111 187 160 195 115 98 96 134 142 130 123 108 162 124 142 165 168 168 129
102 69 130 82 95 72 65 112 100 124 124 135 129 97 117 149 169 128 83 92
75 85 121 55 86 88 125 109 148 107 112 83 113 80 95 124 90 92 69 44
65 68 40 48 82 125 111 118 97 168 154 177 190 138 148 142 125 101 106 88
66 85 98 121 162 156 193 149 164 139 165 119 124 122 90 153 140 110 122 74
66 106 120

STO-M16A 104
32 34 70 54 74 60 62 55 70 78 54 50 61 67 41 79 77 79 61 46
43 33 62 45 42 26 32 76 49 42 60 90 74 58 71 54 78 63 63 57
64 55 74 63 64 90 95 118 132 146 145 126 166 98 125 183 109 91 135 90
68 63 55 60 56 87 64 84 82 101 90 96 132 100 111 82 86 66 62 69
75 37 47 61 68 69 55 75 65 57 52 61 61 71 70 91 71 59 38 44
37 40 47 54
STO-M16B 112
42 38 59 36 38 33 50 30 41 40 69 52 69 69 60 50 70 83 51 47
59 76 45 69 78 77 61 44 40 34 59 49 43 35 35 62 42 52 52 95
82 54 77 58 66 65 72 55 64 60 71 64 57 96 92 132 130 127 150 131
172 91 134 175 111 84 139 96 81 66 47 60 56 87 69 91 67 100 90 101
134 95 104 96 81 63 55 80 85 37 62 62 57 72 48 87 63 57 56 62
54 64 71 86 76 61 38 42 47 41 40 46
STO-M17A 281
218 288 311 342 299 223 243 219 318 274 262 229 245 144 181 165 183 217 211 226
202 215 194 174 179 132 193 147 195 180 151 84 97 145 189 173 248 132 127 136
120 117 89 134 119 150 151 156 119 119 99 98 88 108 147 123 85 104 129 116
73 79 80 71 80 115 105 70 70 53 74 67 76 106 69 78 78 116 117 124
100 92 110 58 112 112 64 135 148 136 129 100 73 75 97 108 116 126 91 137
50 61 115 124 133 53 66 58 94 127 102 86 108 85 40 92 89 98 106 141
101 113 97 120 137 121 88 104 73 41 61 94 111 104 67 78 95 115 94 115
91 85 73 74 65 91 61 71 82 77 77 94 87 54 78 118 85 108 105 98
80 94 76 44 49 82 82 57 63 77 54 40 36 45 58 51 62 45 58 43
58 64 61 81 77 72 94 85 93 105 98 73 68 66 76 105 85 98 55 64
30 43 52 40 42 39 42 54 35 31 34 28 24 43 42 41 32 46 58 45
57 45 36 47 70 36 38 23 26 48 45 34 40 40 45 33 49 43 52 54
34 38 30 28 25 42 44 31 25 23 23 31 25 34 32 20 24 26 21 31
32 43 40 45 29 28 33 32 49 69 86 72 49 72 59 82 78 92 67 103
117
STO-M17B 298
255 217 207 208 190 233 249 204 240 173 260 264 271 222 165 174 162 268 266 300
285 208 167 183 148 198 202 191 205 235 235 172 152 172 130 217 196 192 202 177
111 124 167 195 284 320 148 149 165 137 202 144 177 194 231 235 202 173 188 138
133 112 180 193 146 143 162 215 168 111 90 58 62 66 74 87 67 51 53 69
66 56 91 58 57 92 111 99 108 88 68 67 54 63 90 63 93 93 90 80
85 55 41 32 55 51 64 44 59 39 36 54 48 48 31 33 31 45 43 40
34 33 41 20 40 39 46 59 60 53 35 55 50 43 61 53 51 44 32 26
44 53 42 30 27 39 44 46 38 45 35 38 64 44 63 45 69 69 78 77
90 47 44 71 129 88 83 96 80 83 115 80 58 77 101 100 67 67 98 66
60 37 64 96 76 65 75 49 37 79 94 69 112 120 115 97 103 86 91 100
97 88 67 65 99 92 84 82 60 45 52 84 76 90 95 95 76 57 60 42
26 38 56 52 39 69 43 60 87 61 87 70 64 70 91 104 89 59 56 101
94 81 92 75 126 112 138 114 108 104 72 72 68 61 78 69 65 88 77 104
86 98 88 138 103 150 109 67 84 94 88 63 65 77 103 73 57 56 77 54
41 69 81 106 107 95 99 80 87 65 93 101 99 97 92 81 92 90
STO-M18A 191
181 202 187 183 281 167 109 189 235 210 151 133 114 153 187 153 139 163 138 165
165 123 128 116 210 201 263 236 205 152 251 178 228 199 220 208 230 254 165 171
232 266 283 294 241 184 201 211 169 172 214 212 223 213 200 229 309 232 130 175
219 216 246 188 170 200 204 239 226 140 216 196 224 250 260 151 130 163 216 244

213 234 207 119 155 190 158 152 162 119 154 125 135 95 126 150 127 102 114 182
158 98 111 116 99 71 93 132 170 171 103 94 106 63 84 84 74 86 58 89
90 88 141 84 101 87 85 116 117 138 159 76 104 159 118 113 73 119 96 125
136 123 158 144 127 112 107 90 118 124 105 123 155 244 165 212 183 238 216 233
178 140 179 182 196 141 219 181 212 123 189 227 218 243 233 212 182 139 102 111
86 113 146 141 123 137 151 164 143 126 202

STO-M18B 191

194 210 195 174 296 156 124 186 215 222 145 140 111 154 186 163 132 166 144 141
182 116 128 121 207 225 249 220 208 201 225 194 235 196 229 193 231 256 180 172
225 239 296 301 242 162 217 186 188 173 223 217 222 212 208 210 335 216 135 164
201 218 259 171 187 200 189 260 232 124 241 199 225 251 260 118 98 164 209 251
198 276 190 117 171 181 167 152 157 123 172 142 100 90 137 141 117 105 126 165
163 98 98 139 80 77 82 131 160 183 97 91 106 73 74 76 82 86 64 66
96 77 118 103 116 92 90 103 115 126 166 90 121 144 120 107 88 94 123 110
137 126 153 180 122 106 128 76 113 130 107 125 162 227 182 156 194 209 190 179
179 123 181 170 232 144 206 268 107 106 198 204 196 191 239 250 165 138 79 115
99 74 150 122 135 127 153 156 143 131 180

STO-M19A 189

104 140 154 132 177 76 66 94 112 127 126 80 86 77 97 126 65 136 111 166
132 100 89 109 95 110 89 107 96 90 80 117 106 106 68 109 168 146 125 109
106 139 119 132 115 136 146 125 170 122 142 204 209 109 130 183 175 186 151 127
144 151 183 137 123 189 187 200 227 290 156 103 89 168 146 114 116 135 87 75
136 126 158 119 94 114 79 89 78 97 162 116 97 99 135 124 100 88 138 100
66 108 136 138 146 88 84 138 109 107 61 61 95 63 142 138 224 172 207 183
206 149 159 94 100 121 255 142 105 125 135 134 133 140 166 272 164 245 247 199
285 194 201 144 151 260 197 183 227 239 259 148 245 238 258 173 170 212 221 212
186 191 126 228 156 187 123 171 247 213 149 100 178 150 122 99 110 89 85 114
122 149 137 136 107 111 68 94 118

STO-M19B 189

118 101 155 121 172 90 66 85 124 108 116 104 84 75 81 139 71 126 116 167
139 89 98 108 92 97 90 110 99 83 78 110 112 100 86 102 158 150 118 107
119 141 109 144 113 144 146 137 162 128 130 201 201 128 117 191 172 192 140 130
126 152 155 145 114 209 188 198 245 272 153 106 77 196 147 124 114 150 68 99
134 113 158 113 88 115 76 88 82 102 168 106 82 107 131 116 103 73 146 114
63 110 139 140 139 86 83 125 122 89 70 62 91 57 137 152 220 176 214 184
186 163 157 96 96 127 255 142 97 118 151 127 133 142 163 270 154 254 246 227
274 207 192 156 146 258 204 179 258 214 253 167 241 223 258 180 159 232 215 207
191 196 128 239 150 192 113 177 226 227 150 108 178 163 121 99 102 89 80 118
132 143 125 153 98 102 72 109 124

STO-M20A 197

201 193 222 230 200 183 136 146 111 141 275 220 236 183 174 127 202 182 158 188
190 215 161 233 164 160 240 287 231 229 237 188 294 225 184 196 219 157 234 284
270 194 161 175 195 231 206 240 230 254 202 175 152 181 158 138 159 113 166 182
158 165 179 231 156 199 213 153 141 139 158 142 122 166 141 110 150 152 109 66
92 117 128 108 84 123 75 66 211 167 194 244 135 193 180 170 172 176 186 142
125 156 186 122 110 139 136 60 52 98 128 107 125 87 79 106 64 69 71 91
101 65 97 114 132 97 144 128 128 123 137 142 67 87 87 119 94 146 164 145
132 125 111 193 157 190 144 149 173 157 132 125 127 146 99 93 129 113 145 123
128 109 167 102 163 138 106 123 94 88 74 83 78 68 58 80 141 139 121 109
199 183 144 155 262 212 256 293 244 177 238 256 349 198 172 200 289

STO-M20B 197
196 191 212 234 203 178 128 192 130 112 245 250 227 188 183 123 172 181 161 197
243 230 142 231 166 203 230 294 221 230 206 203 310 274 173 172 205 105 234 259
278 207 164 186 191 236 234 248 220 254 202 181 156 176 160 147 156 110 171 190
158 159 180 227 178 206 195 155 149 126 151 151 113 161 152 117 155 146 114 78
109 95 118 117 107 121 82 78 200 179 205 234 142 192 184 169 181 174 161 146
106 160 185 125 119 129 136 77 59 84 123 123 105 77 88 96 66 74 64 78
106 70 100 114 122 94 129 120 124 128 139 95 55 103 106 88 97 140 159 134
121 126 104 194 145 186 158 153 176 155 129 118 130 146 106 93 129 122 138 118
140 113 152 86 189 129 98 123 108 87 68 100 68 76 53 84 109 164 130 110
203 177 167 137 246 219 256 301 230 184 238 276 344 219 163 216 248
STO-M21A 140
151 176 149 177 187 132 176 166 170 203 230 228 171 203 161 142 193 296 267 194
158 120 218 174 129 223 188 153 218 169 160 145 253 117 124 168 193 141 99 104
133 154 160 229 86 36 63 146 137 123 105 140 89 157 103 115 81 145 107 100
79 93 98 44 48 95 105 129 74 59 54 92 101 103 72 90 94 74 67 88
77 70 115 81 65 93 100 72 65 94 98 77 78 73 81 81 103 93 81 96
50 69 52 59 49 73 80 76 72 90 78 106 76 76 55 49 41 71 58 52
43 29 52 64 59 39 58 33 50 33 74 63 65 55 44 56 59 46 43 52
STO-M21B 140
160 196 155 163 178 132 182 175 155 204 257 228 174 193 161 160 195 285 274 184
154 129 220 193 126 227 169 177 201 154 169 154 226 128 109 170 182 145 84 107
135 147 191 221 87 52 51 138 146 125 103 145 96 144 107 123 82 139 96 104
67 107 97 41 44 100 103 137 77 43 61 93 97 105 69 73 105 68 66 86
71 73 118 75 61 87 99 70 69 90 98 72 74 90 82 73 90 104 77 102
53 68 70 57 52 82 75 72 78 85 80 108 69 78 59 42 61 58 60 61
40 29 49 72 45 54 45 43 51 34 68 55 62 65 43 63 66 50 32 68
STO-M22A 110
207 119 273 124 315 258 158 232 188 237 168 126 150 204 141 248 240 283 185 226
213 118 211 232 76 123 264 161 160 160 201 200 164 130 197 164 145 66 99 85
162 97 103 88 87 103 126 259 110 143 162 102 95 103 95 81 58 123 96 94
68 85 197 107 204 133 118 174 83 126 110 125 105 135 87 108 89 118 67 90
115 189 127 133 113 130 110 172 101 94 74 69 84 73 99 57 59 83 80 78
69 65 76 57 103 104 134 106 131 104
STO-M22B 110
273 134 278 115 320 266 131 248 198 231 201 121 136 215 145 233 251 291 175 241
211 124 222 222 101 115 274 138 171 156 203 184 179 130 193 165 143 74 87 74
145 96 94 69 62 124 142 255 97 148 163 112 85 97 93 88 61 131 76 91
83 98 187 95 192 134 104 179 92 128 110 124 111 130 104 95 80 118 75 91
112 194 121 136 114 135 106 165 100 93 70 67 85 71 100 63 57 71 78 79
71 75 76 59 112 107 135 98 145 123
STO-M23A 156
166 144 179 93 248 179 136 139 118 124 261 204 290 183 290 117 172 147 197 130
223 240 268 291 204 202 205 188 160 194 158 147 160 221 227 180 173 135 65 206
265 219 167 191 163 111 161 259 256 207 159 138 166 122 148 144 148 163 162 146
217 247 154 141 122 123 86 138 161 160 212 215 145 111 151 109 96 63 106 137
105 124 205 154 130 198 194 190 190 154 90 73 125 99 164 102 217 152 137 140
168 146 145 152 145 116 122 174 211 183 218 185 228 171 213 350 284 339 334 301
269 301 172 382 261 261 260 274 302 23 349 215 232 193 265 343 183 250 202 339
383 181 213 232 172 188 214 231 195 221 217 233 224 144 145 175

STO-M23B 182
129 116 119 173 162 119 91 142 205 207 262 183 143 185 228 64 158 132 166 147
181 208 154 214 183 212 73 113 151 185 119 164 141 106 157 112 121 101 148 95
141 132 152 100 143 104 132 160 182 138 148 138 111 131 116 150 165 144 122 148
200 187 196 114 80 127 145 182 187 254 166 110 185 195 148 223 166 120 156 175
162 137 163 182 206 160 200 210 155 134 106 112 102 116 125 139 179 168 130 93
125 105 74 72 100 131 124 187 142 160 100 180 134 166 132 115 76 68 109 121
180 107 213 139 125 122 211 127 181 132 182 201 195 266 259 193 221 214 281 241
230 226 234 231 239 263 248 277 195 270 170 162 176 127 169 152 167 106 157 96
124 169 135 152 124 226 179 186 132 194 151 150 166 176 122 148 121 138 151 145
147 173
STO-M24A 206
226 208 148 114 131 135 153 164 151 98 152 155 136 181 173 153 172 166 112 98
133 165 122 147 131 127 98 108 76 87 138 146 170 92 53 70 79 102 98 105
101 155 119 177 118 118 72 59 51 95 116 122 89 82 173 118 61 63 64 84
86 82 83 77 60 65 69 59 79 95 82 69 74 119 104 153 93 89 92 63
59 110 92 120 142 166 168 101 113 74 67 87 127 113 101 148 89 87 84 117
147 97 73 43 67 127 97 73 153 157 54 98 100 98 193 223 95 114 100 143
126 111 74 110 78 64 92 129 135 122 110 132 155 164 185 126 118 207 219 186
134 150 135 142 146 93 112 148 158 149 160 167 148 168 135 120 92 98 107 94
69 103 135 124 139 126 88 51 66 89 115 87 85 84 45 55 95 131 111 90
108 103 65 87 77 117 129 121 98 78 133 111 100 54 90 62 39 72 130 103
74 79 66 50 69 88
STO-M24B 239
121 89 47 70 92 92 111 90 104 155 124 134 87 100 74 54 45 104 98 94
82 85 111 87 65 75 86 92 153 105 151 130 105 67 81 70 93 149 147 138
70 239 180 241 160 120 114 97 97 140 160 200 208 208 177 143 139 101 129 159
171 159 182 215 139 139 151 182 185 129 142 62 100 147 131 92 122 145 81 116
121 140 134 246 140 136 79 131 166 42 172 161 168 107 128 269 257 175 109 186
335 326 366 272 198 233 233 205 205 248 206 187 188 145 192 247 197 155 144 231
192 204 176 120 125 156 156 122 84 207 223 176 154 171 112 69 62 178 233 135
107 122 60 48 126 156 229 194 123 163 107 62 74 143 209 169 154 141 186 172
165 130 201 71 42 52 119 151 152 175 128 111 82 74 83 52 27 83 87 99
107 156 140 112 159 221 197 115 84 82 130 167 145 72 74 89 86 95 114 120
174 85 132 96 110 137 116 96 103 89 162 83 90 172 172 176 140 150 135 155
128 133 149 128 106 122 134 116 135 102 84 57 96 114 127 147 201 104 121
STO-M25A 162
147 125 130 108 92 149 173 117 90 108 183 175 190 216 153 187 174 147 124 194
147 212 203 142 119 169 166 93 105 167 150 134 126 131 101 142 164 133 103 161
216 166 134 140 94 81 63 113 165 105 85 114 60 74 128 147 143 140 100 110
81 79 70 96 117 78 92 94 127 90 73 87 104 65 47 84 126 123 111 60
64 66 69 55 34 31 38 30 39 34 101 104 84 97 85 91 83 66 73 97
92 61 57 92 86 61 91 92 104 60 76 68 81 89 71 49 71 64 55 66
61 96 123 153 96 105 121 120 138 126 130 102 83 92 96 70 98 65 92 56
101 119 131 171 146 155 138 80 114 100 92 83 118 129 155 89 128 98 85 67
63 109

STO-M25B 162

133 136 128 108 89 134 168 120 88 105 180 161 190 192 152 186 166 152 139 170
149 195 182 149 135 171 176 100 99 181 141 144 119 129 110 143 163 135 92 160
219 173 138 136 93 81 73 110 161 97 100 118 65 79 127 147 141 135 107 105
94 84 60 92 104 80 94 105 116 91 72 90 98 66 56 83 133 122 101 73
69 58 62 48 45 37 34 32 38 39 94 113 84 96 86 86 83 72 76 75
100 97 67 63 93 103 90 82 112 64 71 65 79 94 74 52 73 56 54 72
57 86 137 143 100 113 108 132 142 126 134 86 91 106 96 84 87 78 83 64
92 113 141 174 148 158 147 70 109 109 79 82 114 129 147 110 122 103 83 49
45 114

Data of measured samples from Stoneleigh Abbey buildings

Measurements in 0.01 mm units

STO-I01A 119
259 254 269 165 202 212 197 230 163 210 117 116 74 170 211 181 245 250 268 177
106 122 132 108 146 124 144 143 113 111 91 130 157 159 121 95 119 88 77 104
78 91 112 117 117 128 139 136 122 172 124 105 112 148 132 89 87 122 136 106
104 139 88 98 64 56 45 45 37 25 24 24 18 18 24 24 24 24 28 21
21 32 30 31 35 34 26 44 53 58 94 72 95 92 95 99 66 59 64 114
88 117 141 84 103 118 118 87 107 107 100 100 136 93 84 64 74 60 90
STO-I01B 119
224 261 270 159 206 196 191 240 147 201 115 109 74 168 211 182 264 236 261 178
110 112 128 102 144 136 144 130 105 104 90 133 152 161 129 100 115 84 79 101
90 92 110 112 120 130 130 137 127 174 120 108 114 149 128 88 90 121 138 112
90 132 91 98 64 65 39 46 29 39 26 26 15 20 20 19 26 27 27 21
28 22 33 27 32 40 27 48 46 58 86 65 98 98 93 95 74 56 60 118
84 118 134 91 102 111 124 85 111 108 104 102 131 95 88 62 78 65 94
STO-I02A 100
669 410 268 245 358 325 268 187 191 289 186 312 177 279 402 345 270 195 228 214
149 143 142 118 253 199 152 194 153 157 212 200 167 185 155 208 120 163 178 188
158 96 99 105 149 116 177 175 150 168 128 140 95 170 90 81 174 174 92 98
82 171 230 180 217 97 85 146 121 93 117 145 111 149 118 97 70 122 78 75
60 76 84 58 60 87 86 54 39 54 65 68 65 42 37 43 31 27 38 27
STO-I02B 100
694 426 271 227 356 278 281 204 165 278 172 304 199 279 369 332 275 200 227 236
155 173 155 115 251 184 126 205 178 154 220 202 173 178 164 204 127 157 193 177
177 99 101 103 148 116 174 177 150 163 134 139 90 198 100 79 163 173 92 90
81 177 220 182 213 93 87 142 123 99 118 143 112 151 123 95 68 128 79 70
67 72 101 61 65 81 98 57 34 56 67 71 61 38 44 34 34 30 43 29
STO-I03A 110
428 368 407 267 154 174 243 192 207 229 174 181 140 164 143 179 224 176 201 142
188 189 157 207 178 145 186 184 248 253 170 251 245 262 240 232 255 241 222 247
161 182 197 178 231 227 219 208 162 163 132 177 215 200 185 217 190 162 211 242
180 161 128 124 133 128 145 121 107 90 109 109 104 98 118 99 98 115 106 116
131 102 102 145 131 141 124 113 148 152 126 96 108 132 162 133 126 135 116 101
115 105 120 131 110 93 77 99 100 140
STO-I03B 110
418 376 407 268 200 174 242 199 205 231 167 178 146 162 135 182 216 187 189 146
182 186 159 204 177 145 186 185 252 252 194 251 247 262 235 238 246 243 229 238
165 179 192 180 234 223 203 203 168 169 141 179 209 209 180 215 198 162 206 246
180 159 121 126 141 114 146 125 102 96 102 102 103 102 116 106 94 105 114 119
119 98 108 136 136 139 133 112 127 154 134 102 116 124 158 137 124 131 120 102
115 106 113 132 110 90 82 94 105 150
STO-I04A 82
237 212 169 189 198 154 203 198 215 195 182 179 157 163 203 189 188 219 210 172
220 231 178 157 113 132 150 134 136 112 119 102 106 128 121 116 132 112 107 120
113 123 107 108 97 146 131 144 143 124 143 118 134 119 123 144 141 133 127 132
116 98 100 111 115 113 111 82 68 84 81 124 100 103 101 95 104 103 98 106
97 102
STO-I04B 82
246 220 177 185 197 150 192 205 210 203 171 178 146 175 202 187 199 212 206 176
216 225 180 159 107 139 151 130 140 116 111 103 111 124 121 109 135 114 101 122
110 125 105 105 99 144 145 145 142 125 136 130 133 120 125 149 144 133 130 129

121 104 95 108 107 109 102 82 74 86 88 120 103 108 113 78 98 107 79 108
95 95
STO-I05A 114
75 102 131 107 139 196 218 254 263 204 304 309 377 358 350 401 349 356 215 275
363 282 271 190 182 206 173 157 118 110 156 135 85 154 100 95 157 140 133 89
102 64 52 69 103 94 96 73 67 69 86 72 103 144 137 139 84 86 73 99
57 57 104 118 87 59 60 107 117 115 131 74 61 125 116 85 78 82 89 109
78 85 74 101 75 87 77 114 103 86 97 102 108 68 73 64 99 121 99 65
82 66 62 47 53 56 58 49 51 51 45 46 50 54
STO-I05B 114
90 97 132 109 142 193 216 243 272 215 286 322 396 336 363 392 356 346 215 269
346 243 258 193 180 199 170 129 125 107 151 129 84 140 100 96 151 131 136 96
106 64 58 65 105 101 92 74 63 75 87 66 98 152 134 137 73 88 74 92
65 57 102 117 78 68 60 105 119 116 142 71 67 126 120 81 75 82 90 107
76 85 74 95 76 88 72 111 110 88 92 105 112 66 72 67 91 117 107 64
70 68 54 46 58 53 64 53 48 44 54 47 54 55
STO-I06A 115
82 96 115 102 66 178 260 184 131 192 231 326 270 185 262 201 260 184 209 271
270 183 153 182 178 119 130 125 112 157 171 108 157 89 129 155 139 97 85 92
165 121 124 137 163 148 97 89 71 82 86 109 106 145 166 96 141 102 118 119
105 124 149 118 89 78 171 180 181 247 93 81 133 151 130 98 122 104 123 104
101 77 118 79 64 71 90 90 67 95 79 80 48 40 41 54 58 46 46 55
45 48 37 51 40 51 44 43 40 46 36 38 37 23 30
STO-I06B 115
83 94 119 96 63 183 261 180 126 198 230 340 301 190 267 194 247 179 213 274
276 182 152 193 183 130 126 121 117 157 174 103 155 80 131 146 137 93 87 91
167 118 128 140 163 144 93 93 69 82 88 113 106 144 167 94 139 108 118 115
106 121 149 117 94 75 173 177 179 250 90 83 125 153 117 100 121 104 120 104
97 85 114 80 74 66 89 86 71 91 92 66 52 47 40 54 62 48 45 58
35 45 33 50 38 50 43 43 43 37 45 43 44 27 26
STO-I07A 98
208 442 477 346 291 275 214 241 328 246 219 295 241 163 213 174 220 275 318 240
289 303 270 226 192 210 231 223 181 197 160 142 184 204 237 207 251 186 145 267
224 173 181 231 218 176 137 111 158 180 185 178 102 114 139 164 173 158 148 189
132 150 143 110 131 99 80 86 124 185 130 120 171 211 142 107 82 135 151 173
150 112 86 120 72 75 73 72 101 77 68 110 139 86 105 101 64 106
STO-I07B 98
212 432 443 347 298 282 213 252 329 257 214 301 235 159 212 162 225 260 316 211
285 306 254 228 181 217 243 220 176 208 155 145 178 190 222 211 251 190 136 262
221 187 183 240 226 182 146 114 160 172 194 175 92 115 125 163 157 157 140 175
142 155 142 110 122 94 76 78 116 187 127 129 173 226 143 95 70 141 143 169
146 125 91 111 69 85 75 70 113 78 62 124 130 99 96 101 73 113
STO-I08A 86
132 152 172 189 156 111 159 183 135 136 175 190 150 125 83 164 193 222 193 108
104 120 141 175 169 153 191 153 164 164 105 150 117 104 108 149 179 151 121 135
174 100 88 64 113 124 126 110 119 73 90 69 65 78 62 104 76 68 104 139
108 104 102 96 50 69 81 112 61 99 69 94 85 75 59 77 67 102 71 75
76 84 61 60 70 87
STO-I08B 86
152 163 166 185 161 114 146 185 131 142 181 189 149 119 100 155 215 226 180 110
105 130 155 174 160 166 181 144 171 159 109 143 126 96 118 142 177 149 117 149
179 110 80 73 110 119 133 108 115 73 87 70 71 71 67 93 76 71 108 134
76 96 79 75 81 68 78 102 63 99 71 75 89 64 66 77 70 95 72 80
71 84 64 54 75 90

STO-I09A 86
205 138 169 125 132 139 155 103 112 106 108 164 127 157 173 175 179 168 131 177
221 181 283 376 325 142 141 180 299 252 192 264 193 267 234 194 200 141 197 214
234 242 238 161 140 98 85 123 149 149 152 124 109 155 156 113 200 143 140 180
235 152 131 69 53 127 119 134 205 107 131 128 114 137 164 272 207 227 360 211
154 111 130 107 161 249
STO-I09B 86
210 142 164 131 130 139 160 96 112 98 110 168 125 160 173 169 174 191 142 190
224 183 269 348 314 135 149 172 290 261 209 249 195 268 237 199 198 144 194 210
227 239 242 156 148 100 91 113 157 142 157 119 105 153 162 109 196 152 137 175
229 154 125 69 55 133 113 130 210 102 135 127 116 142 154 278 202 232 375 190
158 111 128 114 165 248
STO-I10A 143
132 125 211 228 211 270 213 221 247 355 344 279 285 255 313 177 432 469 326 231
173 120 122 145 126 170 199 258 183 131 107 157 155 146 166 132 129 70 77 64
120 99 117 131 114 179 131 177 148 166 177 170 181 119 93 98 80 106 138 86
74 91 82 106 78 94 118 115 81 68 91 80 96 87 93 77 101 55 76 94
96 110 131 103 78 90 90 76 86 96 89 78 119 97 83 59 48 76 49 44
77 81 95 111 93 98 106 70 83 81 83 86 86 85 63 55 50 65 57 63
76 59 68 66 69 53 67 93 90 97 135 105 61 61 80 52 65 72 74 66
70 118 110
STO-I10B 143
129 129 217 229 220 265 212 219 254 364 346 297 269 236 311 173 437 498 293 237
206 142 138 139 130 171 205 257 181 127 97 154 157 147 170 137 126 81 85 75
110 97 118 132 121 183 146 171 146 166 168 176 166 115 95 105 92 114 121 80
76 88 78 103 71 93 105 125 86 63 92 78 100 89 96 79 106 67 92 102
92 108 124 98 71 99 94 76 82 100 90 88 117 92 85 63 49 77 50 51
71 67 92 103 94 94 102 73 91 85 89 67 100 81 57 45 57 63 52 58
69 49 72 66 76 58 71 83 91 103 100 99 74 61 76 59 54 83 82 74
69 112 114
STO-I11A 161
153 162 170 174 197 142 131 159 141 166 260 461 431 350 285 301 277 260 370 360
489 414 348 332 332 327 260 304 202 229 232 154 128 174 151 123 143 119 227 159
173 174 168 214 175 174 111 126 93 73 90 131 74 73 70 88 109 79 97 129
150 86 87 113 120 142 108 93 90 100 62 76 117 125 131 138 119 119 124 154
99 97 125 78 69 121 102 100 74 55 55 58 62 63 73 93 72 77 75 102
62 73 59 76 68 70 74 60 48 54 50 50 59 70 53 62 57 54 44 47
57 56 65 69 61 78 76 90 77 107 100 79 89 76 93 73 69 80 78 103
74 102 90 64 78 85 67 62 54 48 46 48 75 42 61 45 62 68 77 94
91
STO-I11B 161
159 140 170 180 197 139 123 168 142 163 300 427 424 353 322 286 273 254 361 359
468 424 347 326 341 316 272 307 191 233 252 150 116 167 136 125 148 116 226 159
170 169 157 209 185 175 115 114 94 67 94 132 80 69 68 80 124 83 99 129
149 85 81 110 125 138 107 91 88 103 55 90 117 121 134 141 120 116 124 162
103 92 120 84 63 122 102 102 71 62 52 54 65 62 75 95 77 63 74 102
60 72 60 76 64 76 70 61 52 46 49 51 63 73 45 67 57 43 45 46
57 64 64 67 61 68 73 87 83 103 96 80 83 80 96 71 75 69 79 97
85 107 70 38 65 62 59 55 49 57 53 59 69 53 55 48 70 58 76 90
114

STO-I12A 107
158 112 88 131 134 105 194 189 122 135 173 143 156 132 136 146 151 117 143 192
156 129 145 124 190 191 188 135 163 197 146 157 257 237 145 137 116 126 151 158
184 179 175 161 182 170 176 132 190 152 161 137 126 138 110 85 78 147 155 143
166 156 174 184 178 151 160 155 170 114 113 137 136 109 122 115 97 121 111 90
70 69 72 74 73 79 73 53 59 64 64 48 53 49 72 54 61 50 44 65
66 73 59 79 72 58 86
STO-I12B 107
124 111 87 134 130 146 192 189 119 137 174 144 161 134 135 148 146 120 136 200
152 127 121 142 186 185 191 133 151 205 175 160 254 238 146 132 118 127 146 162
182 180 171 165 171 173 179 131 179 161 156 134 127 132 103 87 74 135 160 134
178 156 171 176 156 148 139 165 174 104 121 128 141 103 122 117 96 120 108 91
65 66 70 74 80 81 65 61 59 54 63 51 54 54 68 67 54 52 47 61
62 82 59 75 68 66 71
STO-I13A 106
275 274 149 207 219 208 180 247 232 222 225 276 148 205 348 287 307 198 332 228
182 153 253 197 292 217 189 239 146 161 243 228 222 216 138 184 249 166 244 218
161 271 195 233 330 235 230 163 194 161 192 264 155 128 126 190 182 198 136 164
197 179 158 131 165 144 186 192 205 265 249 203 126 132 185 162 134 121 94 171
165 170 170 190 119 110 80 99 86 71 71 71 74 64 90 69 58 72 84 44
53 120 74 59 64 78
STO-I13B 106
280 267 170 201 222 219 174 262 235 210 240 272 149 206 338 283 306 209 315 244
182 153 255 197 283 224 189 245 145 163 239 230 218 215 129 192 264 162 247 224
159 263 194 247 347 235 220 162 188 160 190 259 156 131 116 194 190 190 134 170
189 166 183 136 173 163 181 180 203 256 244 194 127 134 187 154 127 114 109 158
171 172 157 184 125 110 91 96 85 73 62 65 78 68 84 75 70 61 85 52
45 118 78 50 70 81
STO-I14A 91
225 217 176 259 220 214 215 247 233 193 199 195 156 206 250 178 236 204 237 244
146 181 214 214 203 236 196 209 225 229 126 195 291 247 253 175 264 260 185 180
232 219 266 248 176 250 142 189 223 211 175 179 93 144 197 127 213 221 173 214
179 192 258 203 206 157 160 164 167 217 175 146 136 186 180 227 164 172 165 163
147 160 185 159 191 194 185 202 193 144 124
STO-I14B 92
190 216 176 267 208 213 203 255 247 201 198 208 144 211 244 193 223 209 245 242
148 187 216 208 190 241 202 203 223 235 142 189 286 238 258 175 258 283 194 176
231 221 262 240 197 232 149 182 221 209 201 176 92 147 196 132 210 218 174 204
185 185 259 204 212 150 167 155 164 223 169 148 136 198 186 232 156 176 162 178
134 165 192 163 175 198 190 204 191 144 119 154
STO-I15A 81
102 97 211 131 131 168 197 159 167 150 213 221 220 261 288 301 141 189 246 349
404 298 287 215 375 272 224 237 199 209 246 243 279 271 186 146 127 107 127 167
198 202 189 151 219 190 146 211 178 151 204 270 195 171 89 85 194 146 174 242
128 173 134 139 130 164 170 138 139 219 119 84 65 86 61 76 107 127 86 82
109
STO-I15B 81
100 90 219 127 147 179 182 148 184 158 201 221 222 265 294 290 166 186 246 350
353 277 294 202 373 278 222 225 201 206 247 230 306 278 181 151 126 100 130 163
185 210 196 151 218 189 148 215 168 152 211 270 186 170 87 78 190 146 164 222
146 157 136 135 137 159 180 154 127 226 123 68 62 89 51 76 102 128 87 97
105
STO-I16A 54
183 292 335 402 403 386 369 319 271 287 368 204 210 133 168 233 228 319 200 193
250 215 187 246 209 255 181 220 245 239 296 194 318 172 342 232 326 289 195 302
266 378 178 304 347 271 219 319 311 312 260 164 354 211

STO-I16B 54
181 292 335 403 408 379 379 313 277 283 351 204 212 139 165 230 225 322 200 196
250 214 194 250 214 244 184 228 239 251 286 198 305 176 352 235 323 287 192 316
258 369 176 304 351 267 217 327 297 279 245 179 354 210
STO-I17A 135
373 490 381 446 534 429 285 414 402 283 244 218 273 182 210 339 277 220 203 219
182 227 215 176 168 191 232 150 116 181 170 175 192 169 151 99 94 80 98 89
146 147 99 183 109 107 101 115 141 129 131 92 90 77 71 95 85 70 78 92
111 121 78 95 134 141 83 76 96 126 115 104 105 103 115 65 60 84 97 106
85 77 67 85 88 72 87 98 70 66 112 89 91 67 66 48 47 56 48 42
56 55 36 102 92 47 81 54 52 57 65 66 48 44 46 60 56 38 65 54
60 47 51 47 59 69 64 72 88 81 84 83 65 65 118
STO-I17B 135
382 482 374 451 538 438 286 412 407 278 232 191 253 199 210 337 278 225 206 209
179 220 215 176 172 182 229 145 117 185 175 174 193 171 155 99 92 90 94 90
152 145 101 187 105 110 105 111 143 128 140 90 86 79 72 83 88 68 67 90
109 118 83 91 131 143 87 70 99 117 111 111 105 110 115 63 76 84 86 111
82 78 62 84 94 73 85 92 69 63 108 82 90 58 58 36 38 59 56 38
51 41 41 58 111 72 76 55 57 58 61 61 48 46 37 59 55 46 65 52
55 52 45 52 62 63 67 73 87 82 81 85 65 69 107
STO-I18A 96
186 113 102 70 96 78 88 69 82 125 102 90 73 80 60 50 64 64 54 72
62 101 106 67 90 118 159 106 92 110 120 114 87 92 75 98 58 74 84 71
89 78 69 58 81 92 62 58 65 60 42 70 73 73 52 51 53 44 44 51
49 52 77 54 56 75 48 67 53 49 50 55 52 42 34 31 49 40 34 53
49 51 44 48 44 46 52 50 55 70 68 62 73 76 60 92
STO-I18B 96
188 116 96 76 95 74 82 73 81 118 108 96 77 83 61 48 66 61 52 58
66 96 112 66 85 121 147 109 96 105 120 118 80 92 73 94 61 70 82 75
86 78 69 60 82 92 68 62 62 58 45 73 64 72 56 46 49 45 48 51
55 56 69 54 57 77 49 67 50 50 55 54 49 37 32 36 48 40 42 48
46 53 48 48 36 53 55 47 55 71 70 64 72 79 62 87
STO-I19A 133
285 348 320 280 311 393 394 268 198 276 329 302 343 268 289 186 105 137 171 130
142 138 118 167 121 147 119 119 170 221 145 148 116 107 127 159 175 111 105 112
116 128 90 122 153 150 92 90 103 144 127 110 107 118 129 74 99 88 103 122
115 110 82 88 79 72 72 80 88 73 105 90 90 71 116 88 78 72 89 89
97 83 79 87 78 64 82 68 77 70 80 62 61 44 52 70 63 64 78 60
79 63 74 63 62 103 86 94 98 75 77 63 70 59 61 69 80 73 60 82
74 86 69 51 67 66 73 97 54 76 95 68 82
STO-I19B 133
294 345 318 292 307 389 391 267 196 270 347 307 334 277 282 188 106 142 165 132
145 147 115 183 135 147 122 120 170 176 145 146 117 108 126 162 177 105 108 109
116 130 91 125 140 152 99 87 105 131 125 108 107 117 127 73 102 90 97 119
123 108 81 86 84 70 70 86 82 69 94 98 82 71 120 93 82 68 89 86
108 89 82 85 79 68 78 69 74 67 81 70 60 47 52 65 62 64 80 60
81 68 75 64 60 101 86 97 105 82 79 65 69 56 60 80 70 60 63 86
76 93 59 61 70 60 81 93 50 81 95 66 92
STO-I20A 54
298 299 243 244 215 199 234 202 244 281 274 233 248 226 233 195 224 183 164 119
137 126 135 121 109 99 77 80 72 89 89 63 68 54 67 70 64 61 75 69
70 67 55 70 59 78 84 90 83 101 99 101 96 143
STO-I20B 54
301 292 244 238 215 197 231 197 241 286 269 234 244 224 228 188 229 209 166 120
147 125 130 116 108 95 88 83 73 95 83 66 71 52 62 74 62 64 76 67
70 65 57 67 58 75 84 94 82 98 92 102 108 116

STO-I21A 79
348 258 278 345 272 212 180 198 178 150 125 129 178 192 248 253 195 344 327 243
247 437 410 234 182 166 261 270 266 266 191 228 216 171 190 158 126 188 192 234
223 144 153 118 109 91 138 154 154 136 198 237 145 132 108 160 245 242 148 201
198 163 102 160 133 164 206 146 89 132 167 158 155 142 138 113 107 95 139
STO-I21B 79
346 258 276 342 270 222 186 197 177 145 133 126 172 192 258 252 204 321 347 235
254 420 404 243 195 145 273 267 265 270 184 211 209 190 173 152 132 181 199 241
226 141 155 116 106 103 134 152 155 137 201 239 147 131 106 166 245 238 151 200
197 161 103 160 120 169 205 144 93 133 166 156 156 141 137 125 105 97 128
STO-I22A 85
393 662 406 165 156 231 214 214 169 191 314 283 304 296 251 354 396 435 298 341
316 250 279 272 212 293 211 209 216 183 213 195 191 125 138 207 150 105 140 109
126 127 94 93 62 56 76 77 94 109 118 91 84 69 79 88 77 111 91 88
76 63 65 97 117 120 87 76 79 73 84 71 74 63 70 59 65 45 63 30
43 39 50 62 64
STO-I22B 87
393 667 418 199 178 216 207 211 183 174 334 285 306 309 254 346 389 440 294 359
314 261 313 285 214 268 215 203 213 179 208 194 201 121 140 204 150 104 141 112
138 125 102 82 63 58 72 85 98 98 136 97 71 73 87 84 79 110 98 88
58 60 67 89 116 120 64 75 79 77 98 63 78 60 72 64 58 52 56 48
41 31 48 56 70 51 70
STO-I23A 83
279 249 281 263 270 284 342 268 328 376 316 257 323 230 198 262 315 347 243 255
236 235 242 202 202 242 208 200 167 178 266 205 171 186 238 221 209 200 211 259
175 148 162 202 198 210 202 252 229 216 129 189 189 161 134 153 126 89 93 142
143 111 138 129 105 110 118 90 121 127 108 123 125 97 111 121 120 188 257 210
250 246 213
STO-I23B 83
277 250 252 266 269 307 344 265 332 382 307 278 320 226 191 259 315 352 240 255
242 234 234 200 210 238 216 193 173 171 270 188 161 172 234 229 230 217 212 277
179 146 164 195 204 207 205 248 224 215 137 188 191 156 126 154 127 84 102 137
146 112 127 132 102 110 121 84 118 119 104 124 122 103 107 116 117 192 253 213
246 246 219
STO-I24A 76
174 242 307 147 161 114 170 260 208 176 167 101 116 83 55 111 187 226 254 178
223 157 142 175 151 107 126 197 149 166 126 147 115 138 172 118 89 131 237 169
122 150 165 182 177 177 124 116 87 119 119 159 166 136 90 94 175 178 242 186
200 112 95 94 164 153 156 155 185 261 286 207 235 251 306 318
STO-I24B 76
218 241 305 148 161 116 172 263 212 175 172 100 108 87 54 112 188 224 249 177
229 162 139 174 155 104 125 194 153 166 130 147 115 139 172 117 87 136 240 172
123 151 170 177 171 175 136 113 72 120 128 156 181 129 91 90 176 168 254 191
199 115 92 97 162 150 163 153 182 262 279 201 235 246 308 312
STO-I25A 84
244 302 320 163 256 195 208 461 410 270 325 220 239 170 158 342 395 400 458 408
404 315 244 327 335 250 225 363 422 439 307 197 256 258 278 273 168 367 381 332
296 299 264 320 204 239 257 183 127 184 220 260 241 121 123 158 239 237 264 251
204 195 107 142 195 174 168 186 149 175 274 221 181 136 201 247 406 166 158 263
278 248 175 208
STO-I25B 84
237 288 314 195 238 250 222 390 426 282 326 210 241 162 155 344 450 413 449 418
420 318 242 320 341 243 220 364 420 429 308 194 254 269 278 275 182 349 382 332
282 298 266 317 192 249 256 173 134 190 190 254 250 128 120 153 246 248 258 246
205 181 109 138 184 160 171 185 149 177 278 201 177 137 181 231 385 167 113 306
277 219 165 219

STO-I26A 85
240 346 225 208 305 432 498 356 380 460 339 277 227 336 383 330 206 394 493 296
217 216 194 153 149 224 306 271 335 230 305 336 259 408 346 398 237 326 368 230
258 166 201 211 158 123 170 253 213 197 175 197 253 320 219 257 263 212 202 151
177 208 205 136 113 124 173 252 243 237 224 178 105 112 159 110 192 218 197 223
201 121 90 147 199
STO-I26B 85
253 341 223 205 306 440 503 372 379 459 340 279 218 334 392 338 214 378 498 351
250 243 235 167 174 254 334 287 352 224 302 328 269 401 350 398 232 324 368 238
255 173 209 203 166 136 162 262 210 201 172 199 252 326 220 251 261 213 202 147
171 191 225 126 115 129 171 235 193 243 247 181 104 112 141 112 194 221 183 240
197 118 91 147 197
STO-I27A 59
360 395 538 494 391 420 409 456 478 394 240 522 703 486 338 346 420 318 358 540
545 484 635 523 520 389 319 428 467 370 345 413 519 395 352 246 419 383 312 310
286 415 399 403 304 285 306 319 324 344 398 341 275 253 250 280 391 315 197
STO-I27B 59
358 394 556 482 396 421 418 442 479 394 240 533 707 483 326 349 429 316 357 529
538 485 625 531 520 400 316 424 465 368 334 419 526 409 368 260 398 386 310 318
290 413 401 406 310 274 295 313 323 347 379 332 275 258 246 290 366 311 204
STO-I28A 76
185 430 357 326 173 140 243 329 358 336 345 403 311 277 220 317 419 353 214 386
495 346 251 245 218 177 165 286 333 316 369 274 353 355 219 380 345 361 216 367
412 267 305 189 285 213 164 155 232 294 215 247 216 188 229 296 203 243 251 215
195 145 149 171 196 113 85 106 167 188 198 227 220 194 114 121
STO-I28B 76
192 450 337 334 174 140 241 342 367 347 334 410 318 274 222 317 413 344 222 384
496 345 242 252 218 166 163 289 333 311 370 271 358 361 237 360 351 360 215 373
409 273 315 191 295 212 176 157 225 311 207 250 221 188 224 298 208 241 251 215
176 136 140 169 193 103 86 98 170 192 211 224 218 192 109 116
STO-I29A 54
527 479 388 216 456 353 387 516 439 224 132 129 108 164 232 291 311 265 327 283
435 430 301 289 318 291 342 492 428 252 213 314 321 371 343 260 223 387 328 226
215 256 340 411 387 345 339 367 191 214 231 282 323 263
STO-I29B 54
505 516 395 225 452 363 371 520 452 236 139 129 106 174 222 298 301 266 324 289
429 421 305 300 315 292 335 475 436 259 208 309 312 368 351 256 230 404 309 224
223 255 342 424 382 331 317 393 194 204 237 278 325 260
STO-I30A 89
183 179 195 174 222 171 168 272 258 271 258 322 279 228 252 227 204 342 342 226
323 257 208 190 196 350 415 379 487 479 364 198 142 232 189 125 169 215 236 343
199 175 168 192 192 174 113 232 363 230 258 265 267 284 343 263 234 205 165 197
216 244 327 168 132 120 232 262 396 293 264 196 115 124 211 177 175 228 192 208
333 172 216 157 168 186 306 138 169
STO-I30B 89
147 224 166 172 232 171 170 270 246 266 279 355 290 228 242 208 182 304 328 252
334 248 220 194 190 357 398 375 484 467 355 190 129 219 193 122 164 235 190 282
199 182 152 190 201 163 100 242 366 234 264 280 291 299 352 270 238 204 168 199
212 230 339 165 146 124 196 252 396 290 273 188 104 130 214 189 176 231 193 209
335 185 204 153 227 146 325 116 184
STO-I31A 117
253 280 233 253 206 186 173 163 311 270 275 146 152 135 99 132 137 88 96 84
130 142 110 183 196 200 155 181 142 237 230 190 198 297 233 113 129 177 225 244
211 199 153 240 180 140 123 100 84 118 141 148 119 80 63 72 54 74 75 67
67 62 51 88 70 58 88 80 71 114 131 114 97 64 55 111 93 105 116 96
89 87 92 69 88 110 94 76 110 83 62 68 70 59 77 90 141 78 109 109

103 162 64 94 119 82 101 198 100 161 147 177 190 171 187 115 115
STO-I31B 117
262 274 250 260 212 184 167 154 296 260 288 143 154 133 106 134 129 89 96 89
114 149 93 189 188 205 158 182 146 230 226 188 202 281 230 114 128 176 221 240
207 202 147 243 183 145 107 92 98 128 141 151 119 76 65 74 56 70 83 59
66 66 53 82 70 60 90 82 71 107 138 104 97 69 43 118 88 104 120 80
96 90 100 56 91 108 90 74 111 85 62 67 77 59 84 82 140 81 116 110
101 156 71 81 138 63 100 207 113 165 139 186 191 174 177 116 130
STO-I32A 84
161 194 227 222 211 163 312 223 155 112 212 209 201 213 173 141 79 131 127 147
191 224 179 151 154 154 151 150 181 138 185 178 216 213 134 185 187 170 202 194
172 210 222 246 199 227 192 210 250 188 207 170 144 123 177 131 168 168 154 174
124 170 168 175 140 150 107 139 172 147 184 171 150 215 142 183 264 183 232 145
176 162 161 175
STO-I32B 84
170 197 218 213 215 171 302 220 151 114 206 209 200 214 172 141 80 133 122 152
188 220 181 145 150 158 145 149 182 141 186 184 213 211 131 189 186 175 195 193
168 201 225 238 210 221 200 208 251 187 207 178 138 131 183 135 166 167 142 181
125 170 172 177 134 152 107 138 176 140 201 166 149 205 146 186 252 185 206 160
174 160 168 173
STO-I33A 95
282 281 242 259 170 254 238 218 229 271 292 211 199 199 169 183 303 208 249 242
247 244 176 240 213 198 204 150 207 231 224 227 127 180 193 193 246 131 201 217
158 171 173 203 212 179 175 194 142 192 206 184 153 109 103 123 185 112 179 154
137 193 127 165 163 139 189 190 178 150 149 254 172 160 155 200 193 219 153 152
192 143 159 128 170 128 162 179 156 196 177 127 143 177 197
STO-I33B 95
288 277 243 269 160 245 238 213 235 263 280 203 193 192 165 190 293 220 260 250
249 241 180 237 222 194 203 185 200 229 216 239 132 180 201 189 231 138 204 222
171 172 171 203 213 181 166 199 133 197 203 189 151 117 96 124 189 122 178 152
142 188 134 169 155 141 191 178 181 152 143 251 184 150 158 206 188 218 163 152
192 140 159 124 175 128 161 177 160 190 177 130 147 156 196
STO-I34A 113
300 270 230 210 190 167 164 186 164 161 216 198 135 194 195 241 207 193 140 164
204 166 141 184 202 165 175 134 104 96 143 157 121 165 145 171 146 101 126 150
131 121 168 148 110 125 96 165 132 140 166 93 119 159 139 155 131 106 145 139
177 157 161 133 119 94 89 111 155 154 134 145 221 176 125 86 150 151 193 172
171 144 137 101 117 110 136 168 121 103 166 205 172 165 169 123 136 120 137 188
94 189 170 127 146 124 62 96 113 155 140 122 91
STO-I34B 113
298 263 228 208 194 167 161 190 162 158 222 198 145 193 192 242 233 188 129 159
201 165 145 179 202 164 182 135 105 98 140 164 114 170 144 175 141 108 129 148
133 129 164 139 117 121 103 160 131 139 167 91 122 156 136 153 127 112 140 140
176 157 161 131 117 95 90 110 155 150 135 145 215 175 130 94 143 154 196 177
167 137 138 102 108 112 142 162 124 99 176 200 172 161 170 137 128 114 132 192
87 181 168 145 141 131 70 91 118 142 134 124 104
STO-I35A 101
249 382 284 369 359 393 468 402 435 328 248 203 310 258 355 394 273 336 232 287
237 308 312 187 119 180 251 150 200 208 253 221 253 267 222 156 277 271 116 138
129 176 199 162 112 128 228 244 203 179 176 193 186 222 190 181 100 43 81 126
109 138 88 91 114 161 244 137 322 345 164 275 297 243 247 222 138 117 261 222
242 338 202 193 183 359 301 264 275 121 66 64 72 95 106 133 103 162 111 88
153
STO-I35B 101
258 377 286 372 351 394 460 413 433 330 238 197 308 264 346 392 275 332 226 281
231 297 307 186 109 168 261 164 197 256 254 223 252 270 232 155 273 275 130 132

127 175 209 164 117 123 239 238 200 191 175 192 194 222 182 179 105 48 66 115
129 136 90 88 103 155 253 124 287 325 169 275 299 239 268 220 132 119 254 201
225 306 210 189 171 370 299 263 285 135 60 51 66 114 102 121 112 160 153 106
183
STO-I36A 59
474 527 480 384 263 465 517 150 121 128 330 385 225 213 192 328 500 424 306 294
475 378 477 427 398 169 58 84 111 183 311 253 277 358 410 523 361 457 503 370
440 439 385 472 429 284 209 444 546 487 633 429 523 486 563 306 407 314 242
STO-I36B 59
457 523 475 374 253 474 509 149 117 140 318 386 214 218 195 324 506 420 313 285
468 379 477 423 407 156 66 87 124 177 299 236 266 393 398 530 394 453 510 376
459 427 377 478 409 296 201 446 550 481 637 410 524 490 587 311 414 342 204
STO-I37A 71
359 464 490 357 281 196 356 423 155 109 130 229 199 173 173 178 245 343 267 218
195 299 281 303 259 269 135 59 61 78 111 130 94 131 188 268 282 214 458 660
320 389 364 340 426 347 213 171 355 341 256 410 204 237 322 334 316 303 335 160
51 46 51 54 62 105 70 90 158 194 210
STO-I37B 71
351 461 502 387 290 200 353 428 172 105 129 227 205 185 175 174 250 385 268 212
206 304 275 315 262 251 123 50 67 55 114 121 121 123 180 234 297 217 446 667
333 413 349 326 409 335 211 162 369 338 248 408 219 238 327 330 327 309 355 155
44 52 49 63 62 95 72 86 171 185 235
STO-I38A 83
516 606 566 504 396 289 159 157 205 197 364 345 451 359 422 462 631 585 454 660
600 167 110 115 171 110 134 139 213 334 275 343 278 297 367 357 132 123 108 113
134 159 163 122 68 92 125 121 102 157 160 165 244 240 91 42 50 36 48 49
91 68 89 63 96 55 136 121 143 109 95 131 154 173 143 171 253 298 263 346
228 245 271
STO-I38B 83
545 625 551 550 408 296 146 153 192 194 343 338 453 362 415 480 622 608 434 663
596 181 99 113 168 110 137 139 213 325 252 341 267 294 371 352 138 118 107 112
133 172 172 140 76 112 119 124 107 161 166 152 236 223 88 45 60 41 48 56
86 82 82 71 86 65 126 116 147 108 95 123 151 160 152 180 232 295 264 348
240 251 302
STO-I39A 66
346 513 380 363 471 423 505 413 483 492 176 124 154 283 191 196 152 207 358 347
339 331 292 331 302 172 151 140 226 233 256 317 271 344 390 425 336 465 416 387
336 325 358 164 89 116 73 111 175 179 179 261 237 270 159 394 316 302 195 173
248 213 168 137 172 270
STO-I39B 66
364 508 383 331 487 446 513 406 528 490 171 133 145 276 195 203 142 201 367 350
337 329 308 328 322 165 153 137 234 231 272 317 271 351 388 427 340 474 420 399
317 314 347 160 76 125 93 125 158 184 146 236 218 295 158 360 302 311 197 176
245 213 169 129 172 255
STO-I40A 57
318 236 143 211 260 227 167 231 284 249 155 183 243 323 284 174 202 264 265 238
227 226 247 251 264 238 212 224 163 166 239 283 250 164 119 134 154 108 140 96
103 151 175 166 167 196 183 187 236 181 225 227 218 196 169 179 218
STO-I40B 57
290 230 125 211 255 256 173 198 260 258 152 187 246 332 290 175 203 259 285 227
263 225 234 245 263 248 221 227 152 153 224 298 281 151 114 117 138 130 133 112
96 120 177 168 171 168 190 204 231 181 222 248 192 211 175 173 202
STO-I41A 71
244 112 102 187 195 110 125 122 112 214 176 210 151 141 319 237 186 91 121 175
159 245 259 186 351 262 274 311 189 232 213 361 165 264 273 311 228 181 223 343
248 120 178 341 259 207 158 185 222 181 200 149 174 176 163 140 213 247 130 122

75 78 51 116 166 165 142 174 150 234 245
STO-I41B 71
233 109 97 200 197 100 129 91 126 214 173 217 150 137 321 229 163 90 121 164
154 247 258 189 340 256 283 307 190 241 262 388 163 249 290 320 237 173 219 343
268 146 190 364 306 221 155 209 204 176 186 162 178 177 164 120 210 244 127 115
73 63 71 97 157 151 165 198 172 218 256
STO-I42A 62
204 270 164 73 158 174 207 140 170 162 235 213 200 125 113 113 121 190 188 237
233 284 170 247 229 191 112 127 267 256 218 204 302 229 184 177 196 243 166 247
205 248 184 177 118 121 211 213 190 135 121 131 120 115 189 230 175 193 164 251
176 170
STO-I42B 62
202 266 158 82 155 179 197 130 172 150 199 193 213 124 110 110 131 196 174 239
222 281 176 248 247 192 104 112 265 254 202 200 267 218 188 179 200 252 166 238
209 253 183 184 141 122 224 215 176 123 117 136 135 126 179 208 183 190 159 231
176 188
STO-I43A 54
292 165 144 201 186 241 150 282 230 317 387 237 163 321 239 241 317 225 291 333
315 200 279 226 208 142 90 219 312 249 144 198 195 144 110 118 139 145 225 224
232 227 152 115 133 196 227 204 203 178 178 151 164 185
STO-I43B 54
283 160 154 229 214 231 165 290 223 283 376 252 156 323 223 241 310 193 292 318
328 195 275 225 218 145 82 241 322 235 147 193 192 151 101 120 138 141 231 227
206 215 157 117 131 207 229 208 210 171 176 142 180 213
STO-I44A 50
394 480 375 414 403 354 456 455 342 326 322 418 379 384 370 312 268 178 222 322
442 391 627 444 440 565 552 520 363 555 521 198 94 100 184 96 150 141 170 301
322 397 372 344 475 441 173 138 115 155
STO-I44B 50
376 489 374 420 384 375 457 432 332 314 348 409 377 379 364 369 236 190 217 329
424 394 614 449 436 572 549 511 381 518 509 207 115 112 188 94 166 152 179 322
336 395 364 357 467 432 166 142 121 182
STO-I45A 68
382 445 475 481 396 505 531 129 91 92 159 88 126 129 186 342 301 193 185 236
396 380 180 115 97 183 130 166 246 253 279 453 341 308 370 369 485 364 398 435
172 63 97 86 91 122 166 118 140 129 153 87 168 194 260 169 146 207 166 145
131 158 206 263 158 272 134 207
STO-I45B 68
386 450 469 493 388 496 498 137 86 98 153 96 133 156 207 361 290 190 188 239
395 386 188 114 105 172 126 180 224 250 306 436 351 308 373 371 488 391 387 431
168 66 105 63 104 116 148 114 135 118 157 82 168 209 268 164 138 215 172 153
111 158 196 246 162 266 162 213
STO-I46A 90
274 336 424 341 375 400 399 486 495 425 274 244 194 112 132 87 95 167 203 99
153 124 177 140 115 94 169 170 239 156 257 299 228 218 182 110 96 91 116 181
215 239 267 254 221 215 225 206 203 156 167 146 153 150 153 206 206 182 141 169
200 187 191 120 139 147 168 200 128 101 124 160 195 204 226 167 127 121 120 134
153 147 180 176 170 138 171 139 150 142
STO-I46B 90
282 343 417 375 414 388 393 464 500 402 270 249 199 112 125 92 98 174 194 109
139 118 168 149 117 91 161 161 237 156 266 301 231 216 182 112 90 103 112 178
222 233 263 264 214 218 224 208 203 151 160 138 160 151 155 215 197 186 142 170
197 189 196 121 116 137 148 197 130 106 125 161 184 212 228 162 133 118 115 137
151 143 181 176 165 156 163 142 135 156

STO-I47A 96
202 148 177 184 189 137 129 151 229 224 204 127 140 151 194 139 190 207 172 163
189 176 243 177 149 138 205 161 198 166 175 183 149 153 176 142 171 174 115 158
174 190 170 231 163 132 121 101 114 117 120 131 97 110 80 111 130 95 121 122
90 96 79 89 86 92 91 102 71 124 94 96 68 106 84 82 96 77 95 82
102 110 124 204 228 208 203 283 187 85 166 172 191 211 179 256
STO-I47B 96
219 155 181 172 192 132 136 154 226 222 205 131 142 144 180 140 165 209 170 172
181 170 236 194 144 130 193 158 205 161 168 177 160 163 168 160 160 171 133 151
171 184 169 232 177 135 130 100 114 121 123 124 105 105 80 113 120 104 117 122
93 96 76 84 105 73 94 100 81 119 92 93 74 104 83 80 93 84 106 74
105 111 124 216 234 214 197 271 186 83 173 172 190 232 175 197
STO-I48A 54
268 313 364 307 266 407 550 437 495 483 403 467 465 183 183 388 339 284 339 237
239 278 227 198 221 307 219 235 197 181 193 289 201 151 86 146 178 195 221 193
179 187 193 200 248 160 270 117 133 178 138 188 200 192
STO-I48B 54
274 293 359 299 265 417 554 442 465 481 410 468 468 174 191 386 345 288 331 233
244 275 224 200 211 309 219 243 172 195 195 284 218 141 84 159 171 199 216 184
177 181 199 198 248 160 255 122 129 171 148 189 192 191
STO-I49A 54
507 484 568 464 227 305 551 461 429 463 340 339 287 247 234 284 312 263 260 242
134 236 222 165 181 131 225 225 314 269 310 292 390 394 330 326 248 277 284 253
253 227 309 385 428 284 298 230 208 250 402 290 316 270
STO-I49B 54
464 512 577 482 204 285 551 478 420 478 340 360 307 264 231 281 315 251 250 239
149 233 203 176 187 135 207 228 327 268 330 285 369 413 331 342 257 271 279 244
286 220 301 378 424 279 324 247 218 269 417 272 339 270
STO-I50A 75
213 185 212 402 363 359 329 559 585 538 547 419 327 358 402 243 378 387 270 222
250 354 338 416 361 334 331 251 222 267 351 265 238 289 290 204 236 163 163 132
153 93 85 117 166 193 247 243 221 167 133 102 164 206 164 147 72 71 107 148
140 107 97 133 184 287 302 327 270 345 359 326 357 339 413
STO-I50B 75
193 198 190 405 368 382 385 558 586 532 557 428 336 348 407 233 385 381 267 219
255 359 335 421 365 279 351 241 236 271 345 275 235 285 293 195 243 161 161 125
144 100 85 120 175 203 233 253 220 167 131 94 183 197 164 152 74 75 103 141
128 102 95 133 188 290 293 325 263 356 368 325 353 347 354
STO-I51A 160
198 188 251 430 360 272 201 228 263 327 201 132 99 97 116 108 136 109 130 89
88 130 135 211 150 92 89 94 106 110 79 126 137 82 55 80 60 70 50 53
82 98 65 60 86 78 61 91 92 77 51 83 74 68 105 109 162 106 65 66
135 132 143 118 80 136 151 138 150 177 180 150 141 120 61 87 126 98 86 78
93 119 108 115 81 95 93 136 77 110 119 62 69 67 62 80 81 64 53 55
67 67 44 51 56 35 33 39 55 70 54 80 86 55 76 32 59 62 66 71
47 44 65 57 64 54 77 88 86 84 67 94 56 88 63 81 111 78 104 85
73 77 46 74 80 85 62 45 59 91 59 118 57 123 71 66 56 53 44 70
STO-I51B 160
178 180 237 440 366 280 212 223 273 322 199 139 121 103 111 105 141 111 124 82
96 123 136 214 152 93 87 92 103 104 85 130 135 78 58 82 68 70 65 51
78 91 63 65 79 79 58 81 75 85 44 86 71 76 97 115 165 81 64 57
137 137 140 123 79 137 143 142 158 165 183 137 140 116 67 86 122 98 92 75
87 115 118 101 83 96 99 131 86 99 122 65 71 73 80 77 79 75 44 55
67 68 35 55 49 37 43 37 50 72 64 68 85 52 65 48 56 55 70 72
56 39 70 69 52 59 72 87 88 75 68 95 67 85 61 88 113 85 69 84
69 65 52 72 82 88 52 52 69 92 78 115 88 99 75 67 55 54 51 66

STO-I52A 130
360 419 445 363 224 275 211 224 277 206 182 192 139 163 216 208 251 207 153 125
160 216 203 135 254 346 180 104 123 108 116 93 72 99 159 94 96 113 87 81
85 92 86 72 113 96 89 114 143 183 133 104 105 160 163 169 158 116 136 166
185 207 260 224 177 184 139 103 128 164 152 109 100 131 166 139 129 141 141 120
115 86 128 149 102 91 88 113 137 157 114 85 77 77 113 78 81 84 54 63
50 67 81 95 94 100 92 79 57 71 57 79 112 92 88 138 84 137 110 154
166 221 150 144 198 193 218 164 212 255
STO-I52B 130
329 411 431 331 231 241 225 225 285 187 186 186 133 166 225 205 264 202 162 126
176 204 197 137 252 335 187 105 119 116 117 96 70 97 161 95 100 106 90 75
74 98 83 79 117 100 93 130 157 187 129 107 102 167 161 168 161 109 150 166
187 201 264 226 167 187 134 108 123 156 151 107 91 134 182 140 124 146 143 135
109 91 141 150 114 85 91 115 140 166 104 73 82 81 91 81 77 87 58 58
49 65 75 103 99 96 104 72 53 70 71 80 107 88 102 129 97 128 104 158
175 216 148 137 203 190 224 172 197 200
STO-I53A 103
168 202 197 129 143 147 85 87 132 91 92 94 91 116 106 110 116 111 108 103
83 108 147 74 77 84 94 94 93 79 57 57 70 74 53 57 44 20 45 37
63 63 62 79 94 51 63 49 70 58 68 75 46 43 74 55 52 61 84 92
81 85 79 102 77 91 68 99 130 80 101 86 87 74 47 98 96 100 78 50
78 112 67 117 106 100 87 54 56 51 46 56 66 72 78 76 67 53 57 57
59 61 68
STO-I53B 103
137 191 195 146 146 141 74 90 116 95 96 90 86 124 114 86 95 103 97 111
79 108 132 78 77 87 88 93 101 75 54 52 73 79 51 51 51 41 36 38
63 59 62 79 91 51 67 40 74 66 60 73 47 37 79 54 53 53 85 92
85 85 79 104 68 93 61 104 126 83 94 92 80 73 43 95 102 98 61 45
63 115 76 117 106 103 80 53 53 50 39 61 71 65 83 69 65 58 55 49
50 76 73
STO-I54A 89
120 111 97 64 92 197 221 181 167 214 166 139 156 124 126 105 111 88 111 90
139 152 138 94 112 131 165 176 148 107 77 121 87 64 57 61 60 74 94 110
100 104 91 85 86 113 127 129 182 165 110 106 113 115 135 158 111 136 101 158
171 154 127 100 89 105 91 81 97 101 72 72 60 80 98 92 119 139 149 146
92 167 119 179 141 118 114 132 168
STO-I54B 89
94 110 81 67 107 198 224 182 185 221 167 148 141 123 117 107 109 89 106 85
131 166 120 91 113 104 169 187 135 116 76 122 88 55 58 54 65 87 105 94
104 101 93 81 89 111 129 137 176 160 125 106 126 114 136 159 120 131 92 175
181 149 131 109 90 95 74 91 99 101 72 74 55 75 107 94 118 139 145 149
93 167 126 182 127 121 107 132 139
STO-I55A 75
192 182 198 224 232 262 231 120 149 201 180 169 193 154 207 177 83 133 134 157
142 86 132 122 101 103 110 145 81 98 81 112 103 122 105 159 170 163 225 209
187 116 170 163 172 141 197 217 189 124 134 166 171 162 173 106 109 112 166 147
132 157 172 130 166 104 131 162 132 117 167 142 166 150 192
STO-I55B 75
173 181 205 235 243 246 231 119 129 212 173 166 200 152 204 180 88 129 144 149
134 72 132 112 110 112 101 135 82 108 84 95 108 113 107 146 190 146 231 238
173 115 177 165 175 148 179 220 183 143 137 158 174 164 157 117 96 112 186 141
130 159 162 148 147 112 123 172 122 122 169 140 131 155 175

STO-I56A 63
196 209 145 236 154 143 208 204 248 222 116 145 124 151 148 84 161 172 140 137
122 160 98 84 72 116 178 180 141 159 165 147 228 178 158 148 146 136 167 162
189 211 148 108 115 176 191 179 209 116 124 102 126 111 118 123 114 107 124 80
100 112 134
STO-I56B 63
194 208 147 241 146 151 212 202 250 210 136 153 153 143 159 74 179 181 145 119
119 149 108 90 81 122 164 166 105 150 144 156 225 178 151 144 150 144 163 171
186 207 152 110 117 168 197 173 217 119 119 100 123 107 112 115 125 113 102 82
95 114 173
STO-I57A 64
244 147 138 106 153 135 137 161 136 139 144 96 119 139 156 146 135 142 135 141
155 128 109 112 131 111 118 134 106 94 109 89 109 99 106 75 70 93 68 77
86 88 92 68 85 87 95 95 98 118 86 92 97 88 103 97 114 92 93 113
98 86 59 127
STO-I57B 64
242 145 138 103 153 142 116 156 140 144 123 94 116 137 143 144 126 129 148 131
139 109 124 138 116 118 94 146 88 103 104 102 99 93 107 74 70 89 88 77
80 71 91 78 81 82 101 95 106 106 84 105 69 101 101 116 127 64 96 133
83 71 68 120
STO-I58A 99
151 130 136 165 173 160 171 91 108 107 120 128 97 130 91 112 88 109 123 83
71 80 80 122 89 110 88 99 110 83 103 115 144 98 113 153 147 124 93 87
111 127 157 107 135 189 136 163 138 162 153 120 99 168 144 137 91 113 121 95
100 98 136 128 138 93 82 134 77 112 88 145 140 84 105 102 120 142 103 150
99 68 108 84 114 111 95 135 93 87 101 79 80 74 134 130 123 85 112
STO-I58B 99
183 108 138 161 183 168 160 89 101 103 111 109 113 120 92 111 91 109 109 82
72 81 97 118 92 96 96 101 100 85 108 90 141 107 109 151 148 124 89 99
108 116 155 90 139 167 134 175 131 155 149 122 89 174 128 141 102 117 126 86
102 106 118 133 124 88 77 128 93 103 112 136 128 91 118 97 116 125 88 110
114 110 99 83 91 123 103 126 97 95 88 85 85 87 121 131 128 80 129
STO-I59A 68
191 120 140 147 208 278 200 264 325 258 250 288 242 225 167 226 159 193 169 214
251 217 209 154 149 181 182 165 129 115 146 128 122 98 85 89 72 97 84 118
145 120 99 99 85 70 96 69 96 87 83 79 89 84 84 71 74 76 104 103
77 95 89 73 64 74 68 114
STO-I59B 68
173 118 135 151 196 285 194 258 327 273 248 254 243 220 175 208 152 207 167 190
240 231 195 165 166 173 193 176 131 116 136 133 116 93 85 91 76 95 78 125
111 118 95 103 96 66 94 72 97 81 82 88 90 81 88 80 62 78 97 101
82 91 85 83 67 62 67 86
STO-I60A 60
156 230 191 92 108 129 160 146 111 197 200 166 192 124 116 76 90 107 178 176
167 154 215 133 107 94 97 113 88 121 98 121 93 92 122 106 88 54 83 84
82 69 58 54 66 66 90 48 50 44 56 49 65 79 89 55 60 72 59 74
STO-I60B 79
85 111 104 105 96 102 131 109 74 68 103 100 71 71 61 55 82 86 107 63
58 48 62 53 51 73 66 54 55 51 49 74 50 68 59 47 51 70 59 55
48 47 46 50 58 60 56 49 49 48 40 47 49 57 74 60 41 51 54 55
75 80 87 59 80 60 89 76 110 97 81 62 97 72 79 65 96 104 94

STO-I61A 88
174 159 143 208 156 193 196 188 146 170 142 150 130 150 139 109 172 139 126 139
145 135 98 119 87 83 96 83 90 96 82 161 137 126 97 124 115 130 89 104
107 97 81 81 65 78 120 120 145 174 145 112 207 159 126 173 100 90 104 103
123 123 143 106 95 137 117 136 87 98 101 67 87 102 81 102 68 64 90 82
85 78 95 93 106 92 90 141
STO-I61B 88
172 159 148 212 169 234 183 190 145 167 136 156 145 143 142 124 164 150 143 132
126 146 100 128 84 90 87 107 84 90 97 146 135 122 96 130 118 140 76 104
105 96 85 71 74 82 111 121 133 193 134 123 194 140 119 149 121 115 77 95
142 116 126 127 90 143 106 125 83 89 104 79 83 108 85 86 65 68 100 91
79 76 82 97 110 96 81 135
STO-I62A 74
180 213 141 108 146 83 84 75 92 113 102 91 92 69 102 90 161 176 105 106
113 114 137 139 160 134 81 118 106 75 64 96 114 114 82 86 123 68 89 86
73 102 81 92 81 105 70 47 81 103 97 92 97 121 128 126 110 121 112 96
84 83 78 61 177 120 162 135 130 178 111 95 120 180
STO-I62B 74
170 219 143 107 145 88 80 72 95 115 89 98 85 77 95 93 157 162 111 120
97 125 144 139 172 141 85 122 94 73 65 90 111 116 90 88 118 66 99 90
80 96 81 94 86 95 70 56 91 77 99 88 104 118 121 119 114 126 113 91
78 80 80 69 162 113 156 142 168 190 122 87 127 184
STO-I63A 60
147 195 139 133 141 152 110 184 193 166 163 136 146 185 152 170 196 143 134 158
157 165 169 150 148 150 151 158 158 140 170 136 167 168 148 166 164 210 206 152
155 128 143 140 189 193 137 140 183 108 171 116 154 179 145 140 133 179 126 150
STO-I63B 60
144 197 130 159 128 157 91 179 184 169 160 139 136 173 145 160 187 150 137 160
174 165 166 157 130 156 143 143 154 145 171 120 182 155 171 181 172 214 211 167
152 126 129 162 189 198 154 139 171 128 162 107 153 186 152 140 133 174 136 128
STO-164A 116
210 198 131 120 120 154 146 76 166 195 142 102 73 43 38 36 54 85 98 111
84 80 75 63 81 67 63 82 69 52 64 47 68 83 63 53 60 63 99 79
93 61 56 71 44 44 37 51 49 45 80 66 78 73 59 84 76 82 104 106
97 92 79 99 102 98 102 128 87 100 88 122 126 120 85 84 64 88 91 89
90 86 57 61 51 60 105 76 107 118 125 139 98 115 104 156 148 101 113 132
150 150 95 168 145 160 118 104 132 105 118 110 116 128 169 153
STO-I64B 116
187 183 130 122 121 160 140 87 160 210 138 112 63 47 40 46 56 81 97 101
87 80 76 67 72 73 68 71 70 49 56 53 74 77 69 61 57 55 98 86
89 67 55 66 46 48 35 48 51 51 71 75 77 78 56 79 76 90 102 104
107 95 69 98 103 98 95 113 103 95 84 113 129 118 94 78 63 83 88 81
93 77 54 51 56 62 99 92 102 115 140 135 86 112 105 152 135 107 108 118
156 149 91 159 157 154 117 101 131 107 118 124 113 129 158 175
STO-I65A 61
134 138 112 151 134 81 108 96 114 122 119 213 174 121 123 104 92 181 137 166
139 117 112 184 99 136 195 121 138 161 147 164 202 156 110 155 116 77 77 93
109 128 116 93 87 101 81 146 173 113 90 99 87 129 147 135 112 95 114 103
128
STO-I65B 61
115 111 104 150 139 87 117 113 135 126 108 205 157 105 108 107 94 175 136 179
129 106 120 144 103 130 187 115 128 170 140 164 202 151 121 129 95 82 77 86
109 133 113 90 97 101 73 143 187 116 88 97 91 116 153 128 114 100 121 112
113
STO-I66A 97
80 105 136 158 228 173 249 196 137 144 175 156 191 181 299 265 210 272 240 233

232 233 151 224 290 174 210 190 263 208 280 248 254 234 175 197 219 188 197 228
167 196 191 189 199 176 192 202 202 180 215 192 150 113 115 104 113 94 85 95
88 77 87 60 72 84 88 104 80 97 89 102 149 172 129 113 123 81 84 107
116 142 151 111 118 124 103 123 114 108 169 158 143 112 90 135 166
STO-I66B 97
69 67 125 204 245 158 242 180 146 158 170 162 197 186 302 254 204 285 230 236
229 230 152 200 289 187 219 190 254 209 282 240 251 239 172 193 219 190 190 231
176 189 190 194 189 190 183 215 192 164 206 191 154 119 118 104 110 97 100 92
88 81 84 63 72 86 84 99 98 84 86 109 144 160 124 114 120 88 81 111
110 144 153 108 109 128 106 123 110 111 164 154 141 107 82 118 179
STO-I67A 149
158 79 89 90 82 94 91 86 72 89 75 74 84 77 89 105 87 72 92 95
72 59 92 109 72 83 72 108 93 87 102 105 62 85 72 81 81 106 113 65
69 91 62 36 44 50 59 64 67 49 91 69 87 100 95 141 108 108 106 94
56 50 85 142 225 100 75 105 123 143 162 125 116 157 185 194 116 136 233 130
204 111 148 205 121 133 104 143 265 201 145 117 133 165 123 153 120 86 123 210
132 89 92 105 100 92 97 51 82 103 157 206 122 134 150 128 94 92 101 110
116 93 203 164 81 94 100 121 85 92 68 90 74 77 97 97 99 105 85 96
119 113 96 75 80 83 82 85 113
STO-I67B 149
156 79 87 94 77 91 92 91 64 93 75 67 87 79 90 98 95 69 97 90
76 59 89 104 76 81 74 114 89 85 102 109 57 88 68 79 76 112 137 67
80 90 62 37 43 57 51 71 57 58 96 70 84 100 101 134 110 99 112 92
64 44 89 144 216 104 72 112 121 142 160 128 117 159 188 198 111 125 222 140
217 105 150 218 125 139 105 152 273 206 154 114 141 146 128 149 122 80 119 220
132 94 95 99 106 85 98 57 83 105 158 209 125 134 143 135 98 98 92 114
124 104 196 165 76 92 105 122 84 97 73 82 81 72 96 99 96 102 87 101
114 117 99 79 82 71 95 85 130
STO-I68A 88
122 101 168 159 267 202 157 252 286 278 245 195 189 231 142 163 285 240 262 210
241 278 206 173 146 185 166 232 167 201 155 118 162 139 126 98 160 113 137 196
115 101 136 153 121 133 129 125 111 100 119 101 101 117 123 104 156 121 175 152
186 153 149 144 89 130 153 110 114 119 102 95 111 85 100 105 119 134 130 131
137 110 117 68 104 85 105 103
STO-I68B 88
99 116 177 144 264 214 153 252 288 308 249 189 184 230 136 166 266 248 253 216
243 274 206 177 136 182 156 218 149 203 163 113 167 146 125 97 164 113 136 199
122 101 135 146 128 135 124 125 116 101 115 103 94 119 122 104 159 124 160 159
192 151 156 147 92 120 151 112 120 111 100 93 114 91 100 108 121 117 124 126
138 107 119 70 91 94 106 101
STO-I69A 164
143 149 306 287 184 139 182 212 166 173 153 149 107 89 126 108 101 123 122 149
173 167 263 204 133 125 131 88 138 83 126 142 132 181 98 136 120 100 167 152
149 178 172 165 143 143 220 105 187 163 174 160 188 165 230 218 170 186 189 163
179 138 125 100 107 103 126 167 147 116 113 126 115 97 117 135 177 126 157 118
157 136 130 216 129 149 176 158 149 168 143 139 132 187 162 151 127 79 142 134
106 65 97 80 85 72 78 66 95 90 110 108 84 106 82 96 105 118 112 66
93 104 71 58 73 131 168 160 115 88 166 112 124 118 175 141 114 154 143 154
101 78 69 92 133 93 110 93 113 143 133 94 93 77 82 69 66 81 107 76
98 86 96 87
STO-I69B 164
144 146 303 286 179 150 185 217 167 172 143 146 95 86 115 117 107 127 122 150
177 164 258 186 137 118 136 99 134 81 132 148 128 178 102 131 127 105 171 151
182 170 182 150 145 152 201 114 179 177 182 156 184 174 214 222 175 178 196 164

203 133 141 85 110 94 126 158 152 122 119 134 130 93 115 146 167 132 153 106
160 146 147 230 126 152 166 161 158 144 134 142 131 182 160 157 122 100 133 139
103 77 76 86 76 74 83 68 90 87 121 108 79 119 78 91 100 143 105 80
98 104 63 64 69 129 172 161 117 84 175 99 133 124 166 135 133 150 142 147
102 75 72 86 126 104 104 98 99 140 127 100 89 71 81 75 64 80 108 81
85 87 92 91
STO-I70A 129
315 355 267 298 159 229 161 260 318 238 329 223 252 241 217 158 120 134 181 201
113 140 209 140 137 174 163 238 169 118 130 122 120 95 102 78 55 113 105 111
76 102 61 92 64 62 65 70 69 64 81 86 100 66 69 77 62 69 74 84
106 72 63 60 44 65 96 57 53 68 57 82 36 49 39 46 49 57 35 41
49 31 36 30 25 38 52 41 39 35 32 35 30 38 48 38 22 26 26 36
25 45 56 32 30 23 28 39 58 54 50 37 35 29 28 43 70 71 72 105
60 155 73 108 95 130 177 128 209
STO-I70B 129
272 344 259 305 157 219 162 251 337 235 312 237 257 229 209 161 115 140 196 195
119 138 205 133 128 181 164 240 163 111 139 126 123 96 98 80 59 103 108 109
80 96 69 89 70 59 70 64 57 75 90 87 78 74 70 66 62 87 72 85
107 74 52 67 51 67 92 64 50 60 58 74 48 42 43 44 48 51 40 40
53 26 37 30 22 42 47 45 36 39 34 32 36 37 45 36 27 18 34 37
24 39 51 33 22 20 29 43 61 61 37 36 46 27 30 45 63 73 78 92
79 146 81 107 110 126 168 137 203
STO-I71A 66
288 370 388 355 486 359 253 347 206 233 166 273 337 444 351 429 236 223 186 269
187 200 195 283 236 189 264 208 151 136 186 120 169 221 111 141 158 168 128 163
133 132 121 98 98 102 84 105 142 117 194 179 244 236 218 186 211 178 100 153
230 164 160 157 121 91
STO-I71B 66
294 376 389 357 487 292 266 350 196 229 171 279 347 416 349 435 239 222 172 263
169 202 207 274 239 191 255 202 156 137 187 117 170 221 110 141 149 170 133 160
130 133 119 95 95 100 92 110 138 120 211 191 248 241 209 171 204 179 95 159
238 154 165 163 120 101
STO-I72A 85
215 197 218 214 192 278 275 122 165 101 83 78 91 71 78 53 42 41 44 41
72 66 67 66 63 50 47 54 71 76 74 73 71 100 92 117 134 132 149 141
80 106 119 120 120 97 96 102 89 85 92 75 98 98 78 102 84 62 51 58
72 63 110 132 103 130 136 136 136 119 108 135 125 100 81 134 142 153 132 105
218 187 117 146 198
STO-I72B 85
232 203 202 207 203 268 261 118 161 93 85 77 82 81 70 59 39 41 44 50
70 70 66 68 61 54 57 52 72 89 67 67 76 102 97 113 129 135 151 135
81 106 116 119 125 97 96 100 91 86 90 75 99 99 85 100 91 65 48 52
75 65 107 132 105 134 139 111 138 119 109 133 121 103 88 127 144 144 133 108
223 188 118 125 225
STO-I73A 111
162 142 118 170 118 111 80 107 99 85 127 163 107 104 145 112 90 89 110 133
142 136 168 129 119 102 118 98 87 78 80 104 115 84 91 79 88 95 102 70
68 85 62 68 64 66 74 77 67 65 64 62 57 74 63 68 51 55 52 65
63 71 48 58 55 98 68 69 84 75 131 82 90 84 90 60 49 86 65 86
91 92 64 35 73 79 57 68 41 73 103 74 76 65 84 92 97 79 95 67
95 51 43 55 60 59 39 84 91 83 96
STO-I73B 111
129 144 113 179 114 106 78 110 99 84 129 148 112 106 149 115 94 89 101 141
144 140 162 122 120 103 113 103 81 74 64 96 117 84 81 82 83 101 93 71

72 81 63 57 69 65 76 72 68 64 57 58 65 63 70 67 64 43 58 59
63 63 52 55 61 95 62 73 86 68 116 84 82 85 83 71 44 93 54 94
91 93 54 44 88 76 62 66 51 68 98 66 81 54 88 84 96 71 99 67
93 52 43 69 53 69 57 76 85 80 89
STO-I74A 107
144 109 143 138 130 86 80 132 86 135 123 135 126 99 132 109 113 129 121 123
91 108 87 83 73 86 72 102 179 146 69 90 86 97 101 80 64 103 119 129
130 99 102 150 97 105 115 94 122 122 127 171 142 78 97 102 117 86 82 67
85 72 76 73 91 72 90 73 72 98 101 100 81 75 97 118 108 95 57 71
93 51 60 74 66 96 108 104 108 85 72 78 75 92 90 79 69 62 50 60
49 66 54 91 110 84 118
STO-I74B 107
127 105 137 139 130 88 78 127 87 130 127 134 124 99 124 104 115 128 115 120
94 113 94 113 83 94 76 109 187 133 62 87 86 99 109 91 58 116 117 140
138 91 100 151 101 100 112 92 121 121 120 165 142 81 97 114 102 81 87 81
90 77 73 73 92 74 99 75 79 121 126 88 87 76 79 99 83 97 60 70
54 60 63 74 73 98 96 102 103 87 84 74 77 86 87 79 75 64 52 90
51 65 55 85 112 82 119
STO-I75A 147
170 109 142 88 124 121 114 98 109 105 112 126 116 118 92 104 117 104 123 134
92 101 100 99 112 127 80 87 66 105 119 116 85 108 98 112 140 129 144 122
118 112 99 185 159 146 108 131 84 106 65 79 98 62 89 100 76 90 110 86
54 75 66 80 83 80 66 68 76 65 82 104 136 90 81 136 110 108 97 133
138 105 86 86 90 116 104 106 84 87 119 69 100 95 82 88 104 114 70 108
67 86 65 105 106 91 91 88 108 80 47 71 71 68 68 72 95 91 95 146
118 119 88 120 104 60 83 135 101 110 152 110 121 84 109 120 142 141 171 142
120 118 126 118 102 82 78
STO-I75B 147
169 106 136 93 124 121 116 94 106 111 111 127 117 125 97 120 120 99 123 127
100 118 104 97 122 119 79 90 74 108 110 119 90 98 100 104 143 125 145 131
114 112 98 175 168 139 110 128 82 99 64 84 92 70 83 97 75 98 111 82
65 77 66 72 84 76 68 70 74 63 88 121 163 100 84 129 111 110 102 123
128 93 88 78 84 119 108 97 81 87 123 79 100 96 89 90 94 101 80 94
78 78 77 115 103 70 87 88 100 76 41 79 71 68 65 79 96 92 91 155
109 115 103 109 108 70 81 140 108 111 152 115 124 82 111 121 131 152 170 145
118 108 120 127 82 88 95
STO-I76A 92
183 132 103 122 124 124 163 91 196 154 161 160 142 160 203 128 131 170 173 128
186 126 88 83 82 96 128 137 141 84 132 147 126 156 107 108 110 118 88 114
131 166 139 159 170 121 146 99 93 83 113 162 174 181 171 178 192 173 121 94
163 204 230 262 457 206 162 192 216 159 111 124 132 112 93 130 120 110 131 118
91 80 100 85 64 61 87 112 106 176 109 147
STO-I76B 92
162 143 100 117 129 121 158 96 199 149 165 163 144 149 200 134 131 176 173 143
191 130 90 88 78 94 142 133 140 87 130 151 121 149 121 112 114 115 95 112
133 166 139 153 173 120 153 103 92 79 118 157 177 181 166 181 193 164 122 94
164 201 240 270 453 202 148 194 211 152 107 121 136 113 94 125 117 116 134 115
87 79 100 89 63 65 83 113 105 135 118 138

STO-I77A 101
407 289 273 373 283 249 260 238 281 207 234 326 196 230 184 214 190 362 302 265
228 210 254 232 354 215 169 152 208 216 124 151 96 101 83 104 79 94 69 58
62 65 36 55 51 56 52 57 36 48 51 66 67 72 50 67 92 99 105 103
108 99 106 81 86 88 92 119 89 86 105 70 83 76 68 88 92 76 111 84
72 55 60 83 66 87 160 93 145 208 153 192 144 146 156 140 108 100 152 155
159
STO-I77B 101
402 288 267 371 288 248 276 240 277 200 214 324 194 228 176 210 183 358 296 267
226 211 244 244 344 223 172 144 212 208 132 149 89 102 87 106 79 91 71 51
59 67 38 56 50 57 48 56 38 45 45 63 64 74 54 66 96 101 104 102
104 99 110 72 87 88 91 123 94 75 92 79 76 78 63 91 94 77 115 87
68 49 62 83 72 91 153 99 144 202 147 192 143 144 144 158 105 97 146 162
168
STO-I78A 145
84 128 82 162 126 146 71 132 113 197 110 127 189 194 182 175 181 182 108 110
100 143 177 186 178 196 179 142 171 198 234 211 166 165 212 165 175 147 124 144
147 98 103 80 106 111 124 96 99 103 82 84 92 89 82 76 67 55 61 70
47 57 33 94 64 104 86 74 115 76 104 88 111 70 89 65 71 64 96 99
88 82 79 60 90 84 85 93 101 85 94 80 92 88 81 81 58 76 65 65
46 61 63 61 71 58 69 79 63 54 37 54 62 59 62 68 32 33 56 80
36 59 54 68 99 66 53 73 60 54 61 63 72 65 69 51 54 58 57 57
47 57 51 70 77
STO-I78B 145
93 127 80 162 128 134 83 125 114 196 120 128 185 186 192 162 177 180 105 103
101 141 182 182 186 172 187 144 167 199 209 229 158 170 198 181 162 154 127 148
149 112 121 77 118 109 125 90 101 105 92 79 88 77 83 78 74 55 64 71
49 60 37 93 65 102 88 68 120 77 97 86 103 71 93 70 75 63 90 94
90 80 78 59 96 83 85 94 94 85 90 82 90 81 80 78 59 82 63 65
45 61 64 61 62 63 70 77 66 55 37 56 52 66 55 75 37 40 47 60
39 58 51 70 98 73 48 70 55 57 56 61 78 62 69 49 51 62 51 62
46 63 47 68 88
STO-I79A 147
279 341 210 183 200 125 111 131 100 130 134 113 134 164 134 133 95 83 84 139
133 98 87 129 127 107 97 92 54 63 71 92 98 109 89 76 92 70 56 73
52 70 46 72 63 63 70 73 94 65 54 48 81 75 85 88 79 70 83 110
95 87 91 91 117 148 161 291 238 195 170 212 210 240 195 222 233 176 161 162
151 140 141 112 88 113 121 114 102 86 110 105 118 97 79 91 83 87 80 73
60 85 65 79 82 76 79 49 68 82 81 75 78 112 115 112 89 67 120 117
141 96 71 170 96 89 88 113 95 112 176 216 191 174 121 121 133 115 135 116
148 159 117 167 157 188 184
STO-I79B 147
275 343 211 84 199 126 101 136 103 131 141 118 122 172 127 130 94 85 79 111
133 99 86 119 127 106 96 88 54 63 60 90 104 106 72 69 95 68 52 69
62 73 47 78 65 61 66 82 95 70 58 45 84 83 89 79 73 64 74 105
101 97 85 91 134 175 188 334 228 195 177 197 206 224 194 211 222 174 156 151
164 143 143 97 86 121 114 120 109 95 93 98 109 108 72 95 89 86 80 86
56 70 70 78 74 78 86 44 78 87 79 75 75 113 120 108 82 67 125 117
127 97 78 166 92 85 93 112 97 105 172 204 191 174 121 124 130 109 133 122
153 161 115 166 156 182 157
STO-I80A 96
97 92 77 100 68 98 107 69 60 62 91 103 85 123 135 97 111 58 96 59
115 137 171 98 72 79 81 51 40 50 49 62 46 84 72 66 84 88 111 102
107 110 81 76 47 103 104 151 118 101 144 123 124 150 125 121 88 60 57 55

30 79 89 80 79 88 69 96 91 108 132 149 171 148 92 98 85 81 94 132
113 128 152 119 138 132 149 170 184 129 99 167 116 144 171 193
STO-I80B 97
71 99 78 93 68 100 110 70 57 53 71 113 83 129 134 102 97 61 79 63
113 132 202 109 91 79 72 58 41 50 47 46 36 78 76 74 86 86 98 97
118 111 85 83 53 107 108 174 126 101 139 113 116 151 124 114 86 51 52 59
51 80 100 92 83 89 75 113 88 112 128 138 180 132 104 103 85 86 116 134
99 134 156 132 118 132 155 162 182 138 96 163 115 132 163 166 245
STO-I81A 104
329 313 282 264 171 179 260 158 151 177 179 193 173 176 160 206 121 261 198 127
233 155 109 127 138 200 123 118 212 233 177 209 272 258 154 114 156 147 235 116
85 165 138 104 155 134 85 74 71 57 68 59 54 85 77 69 87 121 78 100
86 62 56 50 52 67 59 58 58 47 57 56 69 81 137 102 176 176 223 175
184 209 248 253 336 326 322 331 264 213 192 265 234 329 219 186 236 313 250 323
242 193 180 135
STO-I81B 104
328 305 292 258 163 186 265 159 164 174 175 180 170 164 161 200 130 239 204 142
251 155 104 114 144 200 136 115 180 219 161 214 266 257 143 116 150 148 245 112
86 164 138 103 154 132 90 71 76 56 66 58 53 88 80 68 84 123 91 100
84 72 50 51 50 67 59 59 55 43 60 63 63 82 137 98 177 185 217 173
182 214 241 249 339 330 317 328 283 219 191 264 219 319 224 174 253 302 250 321
253 188 185 132
STO-I82A 86
152 137 136 155 128 110 101 91 124 118 84 81 79 82 82 80 63 87 71 69
69 60 75 43 44 43 47 46 54 60 64 45 36 37 44 45 63 73 65 100
74 79 111 100 139 101 76 43 53 60 105 77 79 86 100 82 68 83 99 82
105 93 106 65 58 61 51 59 60 70 109 126 95 104 93 93 96 111 81 95
92 86 134 116 114 102
STO-I82 86
149 145 137 151 128 110 95 94 122 113 87 79 82 79 75 78 65 88 72 69
72 51 75 44 43 39 55 49 45 60 54 50 49 31 42 37 66 75 65 103
78 86 105 100 135 96 70 50 51 63 101 80 82 88 100 73 69 88 97 86
111 95 97 62 70 62 55 59 61 76 108 128 95 99 90 91 104 103 85 99
87 70 135 118 108 120
STO-I83A 95
280 410 435 375 422 570 575 487 443 379 344 412 405 222 204 164 164 286 200 156
144 198 183 238 169 161 158 71 94 170 178 183 105 159 170 122 137 118 151 101
119 130 188 182 164 158 159 157 152 174 143 189 184 186 144 184 177 178 174 155
109 134 123 167 129 147 108 112 126 160 136 151 112 127 140 188 150 186 228 204
155 152 125 134 105 104 119 90 107 119 120 111 131 79 141
STO-I83B 95
275 410 438 365 410 567 571 504 448 390 344 413 393 207 265 199 206 279 203 154
140 203 183 245 177 154 156 65 107 161 171 188 100 159 174 125 139 119 152 103
119 127 181 182 168 168 156 155 150 177 140 192 181 189 139 187 172 182 176 159
106 128 132 174 125 146 106 121 122 162 135 149 107 126 142 174 152 191 231 201
152 151 128 134 100 121 117 88 104 117 114 104 138 81 113
STO-I84A 138
56 78 84 122 107 132 106 89 85 118 171 172 125 153 123 211 249 258 358 240
274 239 250 272 328 319 269 262 205 191 190 177 218 200 133 102 138 150 151 168
140 143 149 127 122 100 114 111 87 79 69 52 69 74 91 84 82 88 51 89
103 83 85 86 103 92 99 75 58 105 94 108 78 56 147 105 91 94 104 96
111 144 165 174 148 99 107 100 80 121 110 143 160 128 180 125 147 117 135 108
105 114 136 151 136 140 134 136 123 141 158 168 134 229 158 146 173 152 120 113
136 130 164 180 157 164 177 220 203 188 157 131 141 135 181 178 187 186

STO-I84B 138
82 67 87 125 107 123 111 85 82 120 155 179 142 149 137 204 232 232 356 235
273 244 243 287 309 289 276 268 190 183 182 172 200 195 127 92 137 149 139 160
140 136 130 125 112 88 109 108 97 67 64 51 63 60 81 68 65 99 68 79
102 86 78 75 86 98 133 81 55 99 107 91 87 54 144 108 93 99 96 95
119 139 165 174 148 101 103 99 82 120 112 145 158 114 191 133 141 121 138 109
106 136 131 146 131 141 132 138 121 144 158 167 135 229 154 149 172 153 117 113
137 129 158 186 156 171 167 219 206 195 159 137 136 127 177 192 184 178
STO-I85A 81
99 61 102 83 126 141 217 150 112 109 88 61 63 49 52 57 49 76 54 60
84 120 114 107 115 116 73 85 64 114 116 211 131 131 144 166 146 163 119 149
106 79 64 94 87 125 156 148 137 129 101 136 115 161 163 190 231 192 127 143
108 113 110 150 134 173 196 166 202 186 192 223 200 212 131 239 174 209 209 246
339
STO-I85B 81
97 61 99 89 121 142 217 137 115 107 87 63 58 55 45 57 43 81 58 56
88 122 120 101 115 115 71 83 65 114 107 207 135 131 143 162 147 162 122 145
104 80 60 97 84 126 157 145 137 130 117 123 109 159 177 191 233 193 118 141
112 121 102 151 129 177 197 161 204 185 196 219 202 211 132 240 178 204 205 252
331
STO-I86A 82
117 76 91 114 114 91 83 90 84 117 111 78 68 98 63 79 90 94 100 113
61 60 42 73 79 76 59 77 71 66 71 61 98 117 96 76 78 78 77 98
132 110 104 88 82 97 76 39 60 55 91 95 84 98 63 48 67 45 52 46
39 77 121 116 113 115 98 100 79 75 118 78 76 36 35 50 54 59 61 99
129 153
STO-I86B 82
125 81 87 113 114 96 81 93 83 114 104 85 72 96 54 83 86 98 97 105
51 65 42 80 84 75 61 77 65 60 81 58 98 113 101 78 84 76 79 101
127 111 105 86 80 99 80 42 60 64 85 91 83 93 66 45 69 46 51 50
44 72 129 121 104 118 88 94 77 75 113 78 73 43 31 47 55 63 59 104
125 147
STO-I87A 67
72 81 86 85 114 69 41 49 66 77 71 72 89 78 46 91 62 77 90 74
71 59 83 68 83 129 143 142 112 156 123 83 41 59 61 68 91 100 115 69
46 71 52 38 63 38 101 164 142 133 151 130 95 89 90 132 92 93 43 43
32 60 75 79 126 133 133
STO-I87B 67
76 78 86 84 111 72 43 42 72 75 69 76 91 75 51 93 57 71 96 74
69 64 79 66 80 128 139 146 113 157 124 81 40 60 66 65 90 97 117 67
52 67 49 42 66 39 107 159 139 129 152 132 90 92 91 137 87 97 41 37
39 56 81 77 122 136 126
STO-I88A 200
10 10 14 12 09 10 09 10 10 11 10 09 12 11 09 09 11 13 11 12
14 13 11 13 11 12 14 13 13 14 14 12 13 11 09 11 11 14 13 15
18 12 10 13 10 10 11 13 14 13 16 15 20 20 24 17 21 19 20 14
13 11 08 07 08 09 10 10 08 11 09 10 09 08 08 07 10 10 11 10
10 11 11 11 09 09 09 10 08 07 09 07 07 06 06 07 07 06 08 08
06 08 06 07 06 07 06 05 05 05 06 06 06 06 06 07 07 08 07 06
05 05 06 05 07 07 06 05 06 07 06 05 06 07 07 08 07 06 05 05
08 07 07 07 08 06 06 08 07 07 07 07 07 08 07 06 06 07 06 06
06 05 06 06 06 06 06 07 07 07 06 08 06 07 06 05 05 05 06 05
07 06 07 07 07 07 06 07 06 07 05 05 05 07 05 05 09 07 07 07

STO-I88B 200

10 10 13 12 10 10 08 10 10 12 10 11 10 08 10 08 10 10 10 10
13 13 12 12 11 12 14 13 12 13 12 11 13 10 10 13 12 15 13 15
19 12 11 11 11 10 11 12 13 12 15 14 19 20 23 17 22 18 20 15
13 10 08 07 08 09 10 09 07 10 10 10 09 08 07 07 10 10 10 10
10 11 11 11 09 09 09 10 08 07 09 08 07 06 06 07 07 06 07 08
07 07 06 07 06 07 05 06 05 05 07 06 06 06 07 07 07 07 06 06
05 04 05 06 07 06 06 06 06 07 06 05 06 06 07 07 07 06 06 06
06 07 07 07 07 06 05 07 06 07 07 06 07 08 07 06 06 06 07 06
07 06 06 07 06 06 06 07 06 06 07 07 05 07 06 06 05 06 06 06
07 07 07 06 07 07 06 07 05 07 06 06 06 06 05 06 08 06 07 07

STO-I89A 67

30 35 32 33 17 15 22 18 12 20 20 25 20 25 20 20 25 26 25 28
22 19 15 13 12 10 07 05 07 08 08 10 09 10 10 09 15 11 08 05
07 06 10 10 15 23 21 19 15 17 16 10 15 22 21 18 18 20 20 17
21 15 20 19 21 35 23

STO-I89B 67

30 22 23 30 17 18 24 16 16 22 22 28 21 23 16 16 22 23 23 25
21 19 15 13 13 10 07 05 06 06 05 13 10 08 10 08 10 11 06 04
07 07 10 10 15 24 21 18 16 17 14 11 14 22 22 20 17 18 18 15
18 16 22 18 20 35 26

ST0-I90A 76

31 35 30 30 30 25 21 25 20 25 25 30 30 24 18 15 12 12 14 11
12 08 08 10 10 09 07 06 08 10 18 16 19 23 23 17 16 14 16 16
14 12 18 15 10 20 15 20 18 10 10 13 14 13 07 20 17 19 18 12
10 13 16 15 09 11 16 12 11 10 10 15 11 10 15 17

STO-I90B 66

30 35 30 30 30 25 30 20 22 25 22 30 31 27 20 18 12 12 11 11
10 09 08 10 12 10 07 06 09 14 21 17 17 22 22 17 17 15 18 19
13 16 16 14 11 20 23 18 17 15 10 15 15 15 10 14 18 16 10 10
10 12 10 11 12 18

APPENDIX

Tree-Ring Dating

The Principles of Tree-Ring Dating

Tree-ring dating, or *dendrochronology* as it is known, is discussed in some detail in the Laboratory's Monograph, '*An East Midlands Master Tree-Ring Chronology and its uses for dating Vernacular Buildings*' (Laxton and Litton 1988b) and, for example, in *Tree-Ring Dating and Archaeology* (Baillie 1982) or *A Slice Through Time* (Baillie 1995). Here we will give the bare outlines. Each year an oak tree grows an extra ring on the outside of its trunk and all its branches just inside its bark. The *width* of this annual ring depends largely on the weather during the growing season, about April to October, and possibly also on the weather during the previous year. Good growing seasons give rise to relatively wide rings, poor ones to very narrow rings and average ones to relatively average ring widths. Since the climate is so variable from year to year, almost random-like, the widths of these rings will also appear random-like in sequence, reflecting the seasons. This is illustrated in Figure1 where, for example, the widest rings appear at irregular intervals. This is the key to dating by tree rings, or rather, by their widths. Records of the average ring widths, one for each year for the last 1000 years or more, are available for different areas. These are called master chronologies. Because of the random-like nature of these sequences of widths, there is usually only one position at which a sequence of ring widths from a sample of timber with at least 70 rings will match a master. This will date the timber and, in particular, the last ring..

If the bark is still on the sample, as in Figure 1, then the date of the last ring will be the date of felling of the oak from which it was cut. There is much evidence that in medieval times oaks cut down for building purposes were used almost immediately, usually within the year or so (Rackham 1976). Hence if bark is present on several main timbers in a building, none of which appear reused or are later insertions, and if they all have the same date for their last ring, then we can be quite confident that this is the date of construction. If there is no bark on the sample, then we have to make an estimate of the felling date; how this is done is explained below.

The Practice of Tree-Ring Dating at the University of Nottingham Tree-Ring dating Laboratory

1. ***Inspecting the Building and Sampling the Timbers.*** Together with a building historian we inspect the timbers in a building to try to ensure that those sampled are not reused or later insertions. Sampling is almost always done by coring into the timber, which has the great advantage that we can sample *in situ* timbers and those judged best to give the date of construction, or phase of construction if there is more than one in the building. The timbers to be sampled are also inspected to see how many rings they have. We normally look for timbers with at least 70 rings, and preferably more. With fewer rings than this, 50 for example, sequences of widths become difficult to match to a unique position within a master sequence of ring widths and so are difficult to date (Litton and Zainodin 1991). The cross-section of the rafter shown in Figure 2 has about 120 rings; about 20 of which are sapwood rings. Similarly the core has just over 100 rings.

   To ensure that we are getting the date of the building as a whole, or the whole of a phase of construction if there is more than one, about 8 to 10 samples per phase are usually taken. Sometimes we take many more, especially if the construction is complicated One reason for taking so many samples is that, in general, some will fail to give a date. There may be many reasons why a particular sequence of ring widths from a sample of timber fails to give a date even though others from the same building do. For example, a particular tree may have grown in an odd ecological niche, so odd indeed that the widths of its rings were determined by factors other than the local climate! In such circumstances it will be impossible to date a timber from this tree using the master sequence whose widths, we can assume, were predominantly determined by the local climate at the time.

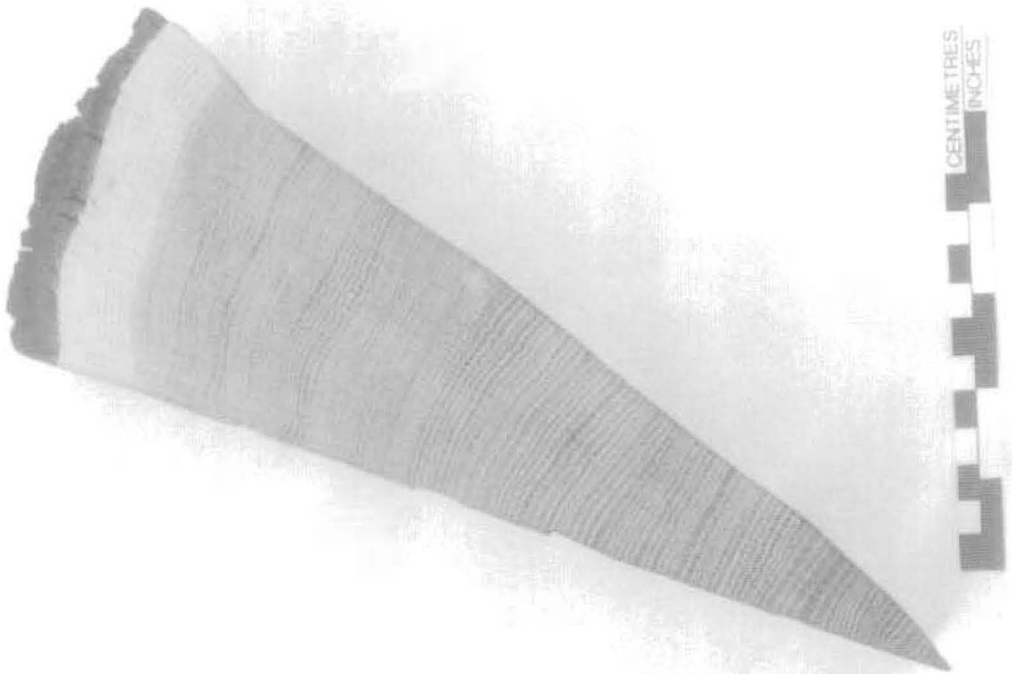

Fig 1. A wedge of oak from a tree felled in 1976. It shows the annual growth rings, one for each year from the innermost ring to the last ring on the outside just inside the bark. The year of each ring can be determined by counting back from the outside ring, which grew in 1976.

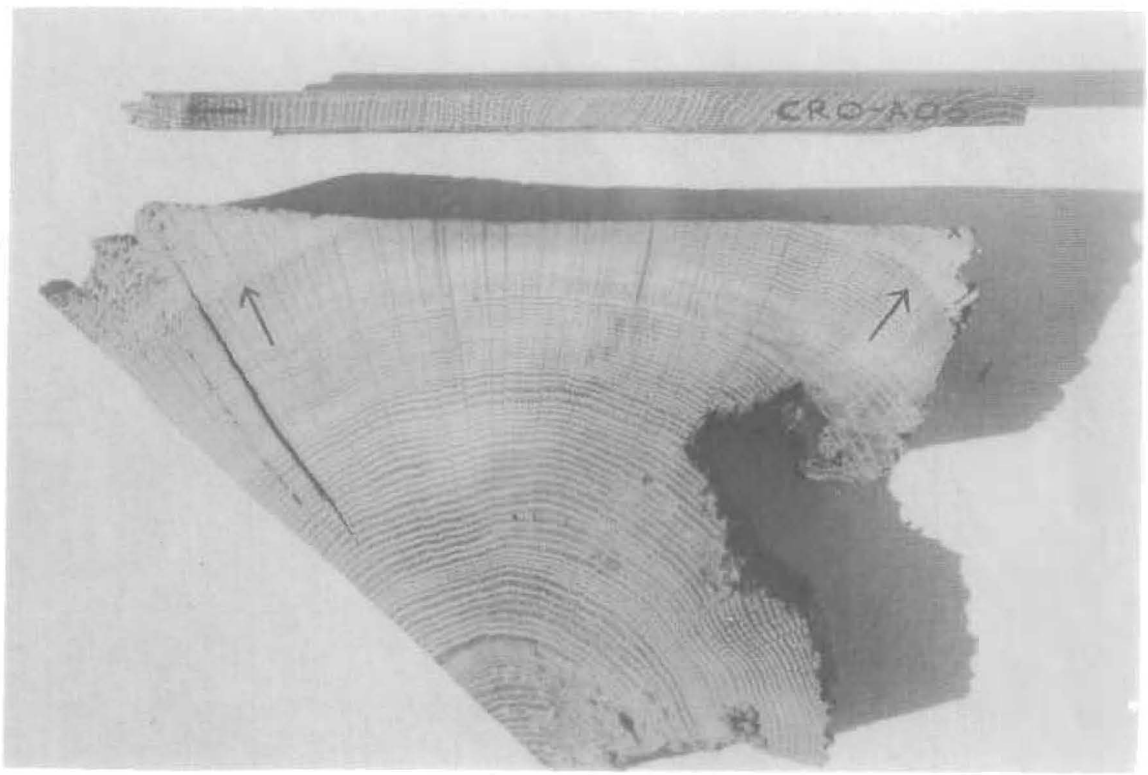

Fig 2. Cross-section of a rafter showing the presence of sapwood rings in the corners, the arrow is pointing to the heartwood/sapwood boundary (H/S). Also a core with sapwood; again the arrow is pointing to the H/S The core is about the size of a pencil.

Fig 3. Measuring ring widths under a microscope. The microscope is fixed while the sample is on a moving platform. The total sequence of widths is measured twice to ensure that an error has not been made. This type of apparatus is needed to process a large number of samples on a regular basis.

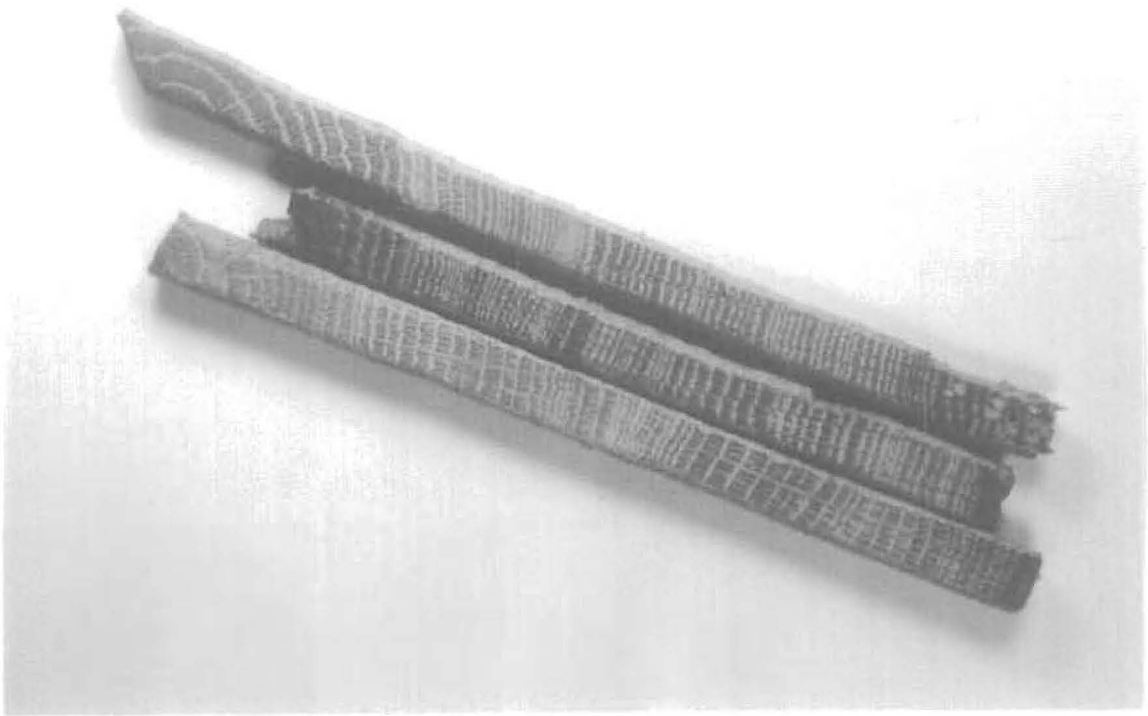

Fig 4. Three cores from timbers in a building. They come from trees growing at the same time. Notice that, although the sequences of widths look similar, they are not identical. This is typical.

Sampling is done by coring into the timber with a hollow corer attached to an electric drill and usually from its outer rings inwards towards where the centre of the tree, the pith, is judged to be. An illustration of a core is shown in Figure 2; it is about 15cm long and 1cm diameter. Great care has to be taken to ensure that as few as possible of the outer rings are lost This can be difficult as these outer rings are often very soft (see below on sapwood) Each sample is given a code which identifies uniquely which timber it comes from, which building it is from and where the building is located. For example, CRO-A06 is the sixth core taken from the first building (A) sampled by the Laboratory in Cropwell Bishop. Where it came from in that building will be shown in the sampling records and drawings. No structural damage is done to any timbers by coring, nor does it weaken them.

During the initial inspecton of the building and its timbers the dendrochronologist may come to the conclusion that, as far as can be judged, none of the timbers have sufficient rings in them for dating purposes and may advise against sampling to save further unwarranted expense.

All sampling by the Laboratory is undertaken according to current Health and Safety Standards. The Laboratory is insured with the CBA.

2. ***Measuring Ring Widths.*** Each core is sanded down with a belt sander using medium-grit paper and then finished by hand with flourgrade-grit paper. The rings are then clearly visible and differentiated from each other with a result very much like that shown in Figure 2. The core is then mounted on a movable table below a microscope and the ring-widths measured individually from the innermost ring to the outermost. The widths are automatically recorded in a computer file as they are measured (see Fig 3).

3. ***Cross-matching and Dating the Samples.*** Because of the factors besides the local climate which may determine the annual widths of a tree's rings, no two sequences of ring widths from different oaks growing at the same time are exactly alike (Fig 4). Indeed, the sequences may not be exactly alike even when the trees are growing near to each other. Consequently, in the Laboratory we do not attempt to match two sequences of ring widths by eye, or graphically, or by any other subjective method. Instead, it is done objectively (ie statistically) on a computer by a process called cross-matching. The output from the computer tells us the extent of correlation between two sample sequences of widths or, if we are dating, between a sample sequence of widths and the master, at each relative position of one to the other (offsets). The extent of the correlation at an offset is determined by the *t-value* (defined in almost any introductory book on statistics). That offset with the maximum t-value among the t-values at all the offsets will be the best candidate for dating one sequence relative to the other. If one of these is a master chronology, then this will date the other. Experiments carried out in the past with sequences from oaks of known date suggest that a t-value of at least 4.5, and preferably 5.0, is usually adequate for the dating to be accepted with reasonable confidence (Laxton *et al* 1988a,b; Howard *et al* 1984 - 1995).

This is illustrated in Fig 5 with timbers from one of the roofs of Lincoln Cathedral. Here four sequences of ring widths, LIN- C04, 05, 08, and 45, have been cross-matched with each other. The ring widths themselves have been omitted in the *bar-diagram*, as is usual, but the offsets at which they best cross-match each other are shown; eg. C08 matches C45 best when it is at a position starting 20 rings after the first ring of 45, and similarly for the others. The actual t-values between the four at these offsets of best correlations are in the matrix. Thus at the offset of +20 rings, the t-value between C45 and C08 is 5.6 and is the maximum between these two whatever the position of one sequence relative to the other.

It is standard practice in our Laboratory first to cross-match as many as possible of the sequences of the samples in a building and then to form an average from them. This average is called a site sequence of the building being dated and is illustrated in Fig 5. The fifth bar at the bottom is a site sequence for a roof at Lincoln Cathedral and is constructed from the matching sequences from four timbers. The site sequence width for each year is the average of the widths in each of the sample sequences which has a width for that year. The actual sequence of widths of this site sequence is stored on the computer. The reason for creating site sequences is that it is usually easier to date an average sequence of ring widths with a master sequence than it is to date the individual component sample sequences separately.

average sequence of ring widths with a master sequence than it is to date the individual component sample sequences separately.

This straightforward method of cross-matching several sample sequences with each other one at a time is called the 'maximal t-value' method. The actual method of cross-matching a group of sequences of ring-widths used in the Laboratory involves grouping and averaging the ring-width sequences and is called the 'Litton-Zainodin Grouping Procedure'. This was developed and tested in the Laboratory and has been published (Litton and Zainodin 1991; Laxton *et al* 1988a). To illustrate the difference between the two approaches with the above example, consider sequences C08 and C05. They are the most similar pair with a t-value of 10.4. Therefore, these two are first averaged with the first ring of C05 at +17 rings relative to C08 (the offset at which they match each other). This average sequence is then used in place of the individual sequences C08 and C05. The cross-matching continues in this way gradually building up averages at each stage eventually to form the site sequence.

4. ***Estimating the Felling Date.*** If the bark is present on a sample, then the date of its last ring is the date of the felling of its tree. Actually it could be the year after if it had been felled in the first three months before any new growth had started, but this is not too important a consideration in most cases. The actual bark may not be present on a timber in a building, though the dendrochronologist who is sampling can often see from its surface that only the bark is missing. In these cases the date of the last ring is still the date of felling.

   Quite often some, though not all, of the original outer rings are missing on a timber. The outer rings on an oak, called sapwood rings, are usually lighter than the inner rings, the heartwood, and so are relatively easy to identify. For example, they can be seen in two upper corners of the rafter and at the outer end of the core in Figure 2. More importantly for dendrochronology, the sapwood is relatively soft and so liable to insect attack and wear and tear. The builder, therefore, may remove some of the sapwood for precisely for these reasons. Nevertheless, if at least some of the sapwood rings are left on a sample, we will know that not too many rings have been lost since felling. Thus in these circumstances the date of the present last ring is at least close to the date of the original last ring on the tree, and so to the date of felling.

   Various estimates have been made for the average number of sapwood rings in a mature oak. One estimate is 30 rings, based on data from living oaks. So, in the case of the core in Figure 2 where 9 sapwood rings remain, this would give an estimate for the felling date of 21 (= 30 - 9) years later than of the date of the last ring on the core. Actually, it is better in these situations to give an estimated range for the felling date. Another estimate is that in 95% of mature oaks there are between 15 and 50 sapwood rings. So in this example this would mean that the felling took place between 6 (= 15 - 9) and 41 (= 50 - 9) years after the date of the last ring on the core and is expected to be right in at least 95% of the cases (Hughes *et al* 1981; see also Hillam *et al* 1987).

   Data from the Laboratory has shown that when sequences are considered together in groups, rather than separately, the estimates for the number of sapwood can be put at between 15 and 40 rings in 95% of the cases with the expected number being 25 rings. We would use these estimates, for example, in calculating the range for the common felling date of the four sequences from Lincoln Cathedral using the average position of the heartwood/sapwood boundary (Fig 5). These new estimates are now used by us in all our publications except for timbers from Kent and Nottinghamshire where 25 and between 15 to 35 sapwood rings, respectively, is used instead (Pearson 1995).

   More precise estimates of the felling date and range can often be obtained using knowledge of a particular case and information gathered at the time of sampling. For example, at the time of sampling the dendrochronologist may have noted that the timber from which the core of Figure 2 was taken still had complete sapwood. Sapwood rings were only lost in coring, because of their softness. By measuring in the timber the depth of sapwood lost, say 2 cm., a reasonable estimate can be made of the number of sapwood rings missing from the core, say 12 to 15 rings in this case. By adding on 12 to 15 years to the date of the last ring on the sample a good tight estimate for the range of the felling date can be obtained, which is often better than the 15 to 40 years later we would have estimated without this observation.

T-value/Offset Matrix

	C45	C08	C05	C04
C45		+20	+37	+47
C08	5.6		+17	+27
C05	5.2	10.4		+10
C04	5.9	3.7	5.1	

Bar Diagram

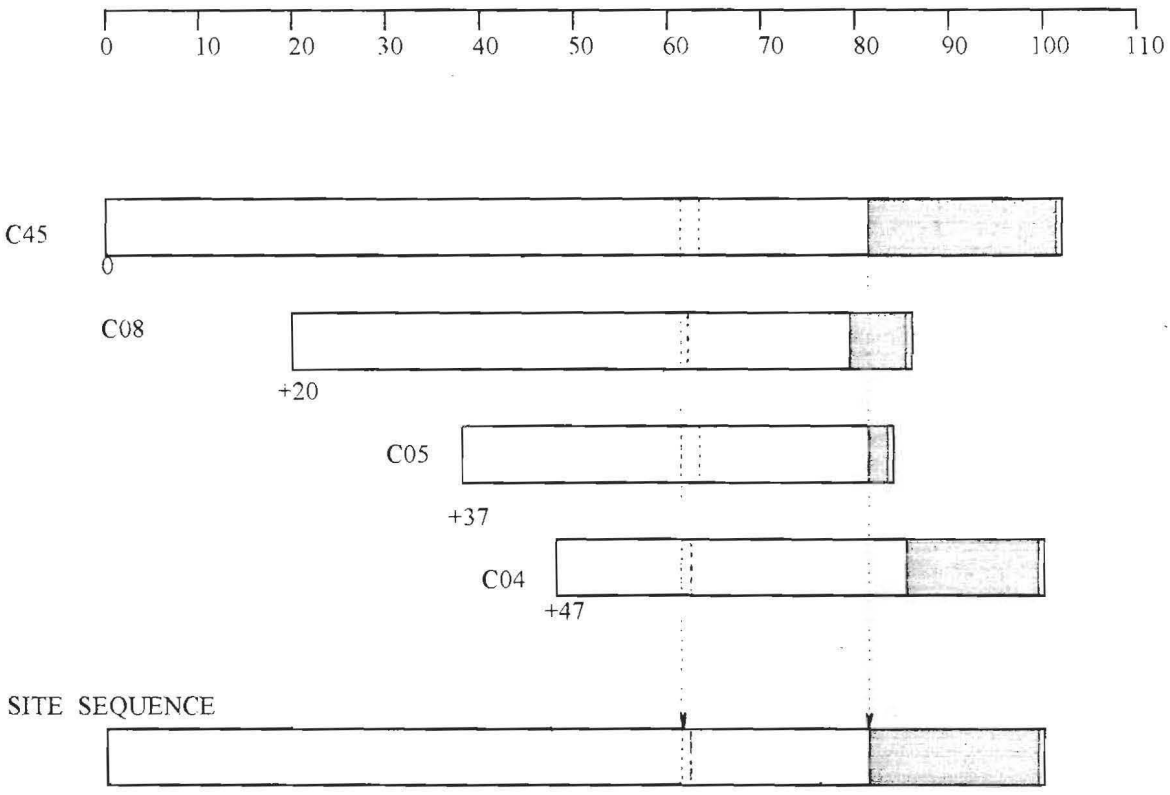

Fig 5. Cross-matching of four sequences from a Lincoln Cathedral roof and the formation of a site sequence from them.
The *bar diagram* represents these sequences without the rings themselves. The length of the bar is proportional to the number of rings in the sequence. Here the four sequences are set at relative positions (*offsets)* to each other at which they have maximum correlation as measured by the *t-values.*
The *t-value offset* matrix contains the maximum t-values below the diagonal and the offsets above it.
Thus, the maximum t-value between C08 and C45 occurs at the offset of +20 rings and the t-value is then 5.6.
The *site sequence* is composed of the average of the corresponding widths, as illustrated with one width.

Even if all the sapwood rings are missing on all the timbers sampled, an estimate of the felling date is still possible in certain cases. For provided the original last heartwood ring of the tree, called the heartwood/sapwood boundary (H/S), is still on some of the samples, an estimate for the felling date of the group of trees can be obtained by adding on the full 25 years, or 15 to 40 for the range of felling dates.

If none of the timbers have their heartwood/sapwood boundaries, then only a *post quem* date for felling is possible.

5. ***Estimating the Date of Construction.*** There is a considerable body of evidence in the data collected by the Laboratory that the oak timbers used in vernacular buildings, at least, were used 'green' (see also Rackham (1976)). Hence provided the samples are taken *in situ*, and several dated with the same estimated common felling date, then this felling date will give an estimated date for the construction of the building, or for the phase of construction. If for some reason or other we are rather restricted in what samples we can take, then an estimated common felling date may not be such a precise estimate of the date of construction. More sampling may be needed for this.

6. ***Master Chronological Sequences.*** Ultimately, to date a sequence of ring widths, or a site sequence, we need a master sequence of dated ring widths with which to cross-match it, a Master Chronology. To construct such a sequence we have to start with a sequence of widths whose dates are known and this means beginning with a sequence from an oak tree whose date of felling is known. In Fig 6 such a sequence is SHE-T, which came from a tree in Sherwood Forest which was blown down in a recent gale. After this other sequences which cross-match with it are added and gradually the sequence is 'pushed back in time' as far as the age of samples will allow. This process is illustrated in Fig 6. We have a master chronological sequence of widths for Nottinghamshire and East Midlands oak for each year from AD 882 to 1981. It is described in great detail in Laxton and Litton 1988b, but the components it contains are shown here in the form of a bar diagram. As can be seen, it is well replicated in that for each year in this period there are several sample sequences having widths for that year. The master is the average of these. This master can now be used to date oak from this area and from the surrounding areas where the climate is very similar to that in the East Midlands. The Laboratory has also constructed a master for Kent (Laxton and Litton 1989). The method the Laboratory uses to construct a master sequence, such as the East Midlands and Kent, is completely objective and uses the Litton-Zainodin grouping procedure (Laxton *et al* 1988a). Other laboratories and individuals have constructed masters for other areas and have made them available. As well as these masters, local (dated) site chronologies can be used to date other buildings from nearby. The Laboratory has hundreds of these site sequences from many parts of England and Wales covering many short periods.

7. ***Ring-width Indices.*** Tree-ring dating can be done by cross-matching the ring widths themselves, as described above. However, it is advantageous to modify the widths first. Because different trees grow at different rates and because a young oak grows in a different way from an older oak, irrespective of the climate, the widths are first standardized before any matching between them is attempted. These standard widths are known as ring-width indices and were first used in dendrochronology by Baillie and Pilcher (1973). The exact form they take is explained in this paper and in the appendix of Laxton and Litton (1988b) and is illustrated in the graphs in Fig 7. Here ring-widths are plotted vertically, one for each year of growth. In the upper sequence (a), the generally large early growth after 1810 is very apparent as is the smaller generally later growth from about 1900 onwards. A similar difference can be observed in the lower sequence starting in 1835. In both the widths are also changing rapidly from year to year. The peaks are the wide rings and the troughs are the narrow rings, hopefully corresponding to good and poor growing seasons, respectively. The two corresponding sequences of Baillie-Pilcher indices are plotted in (b) where the differences in the early and late growths have been removed and only the rapidly changing peaks and troughs remain only associated with the common climatic signal and so make cross-matching easier.

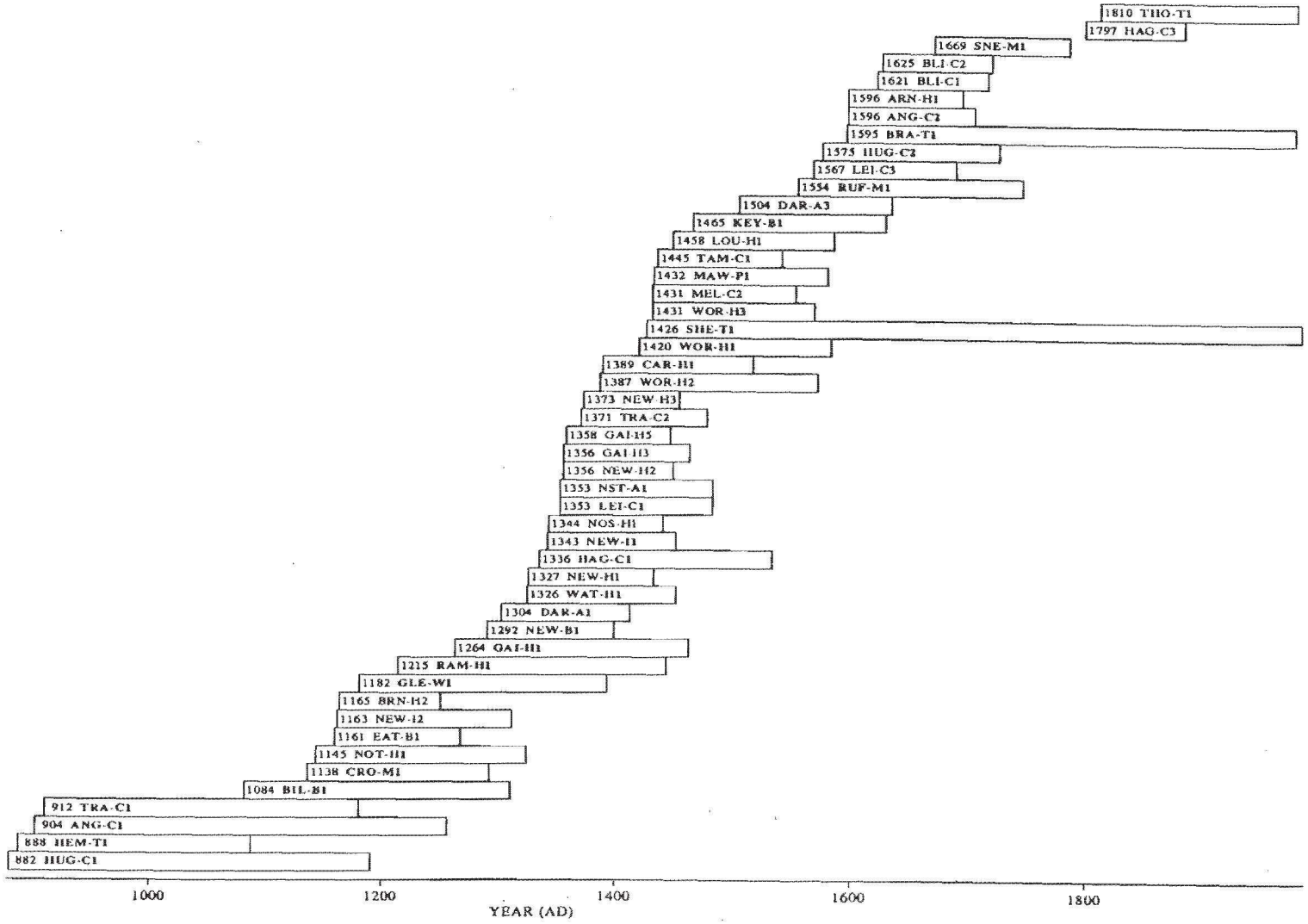

Fig 6. Bar diagram showing the relative positions and dates of the first rings of the component site sequences in the East Midlands Master Dendrochronological Sequence, EM08/87.

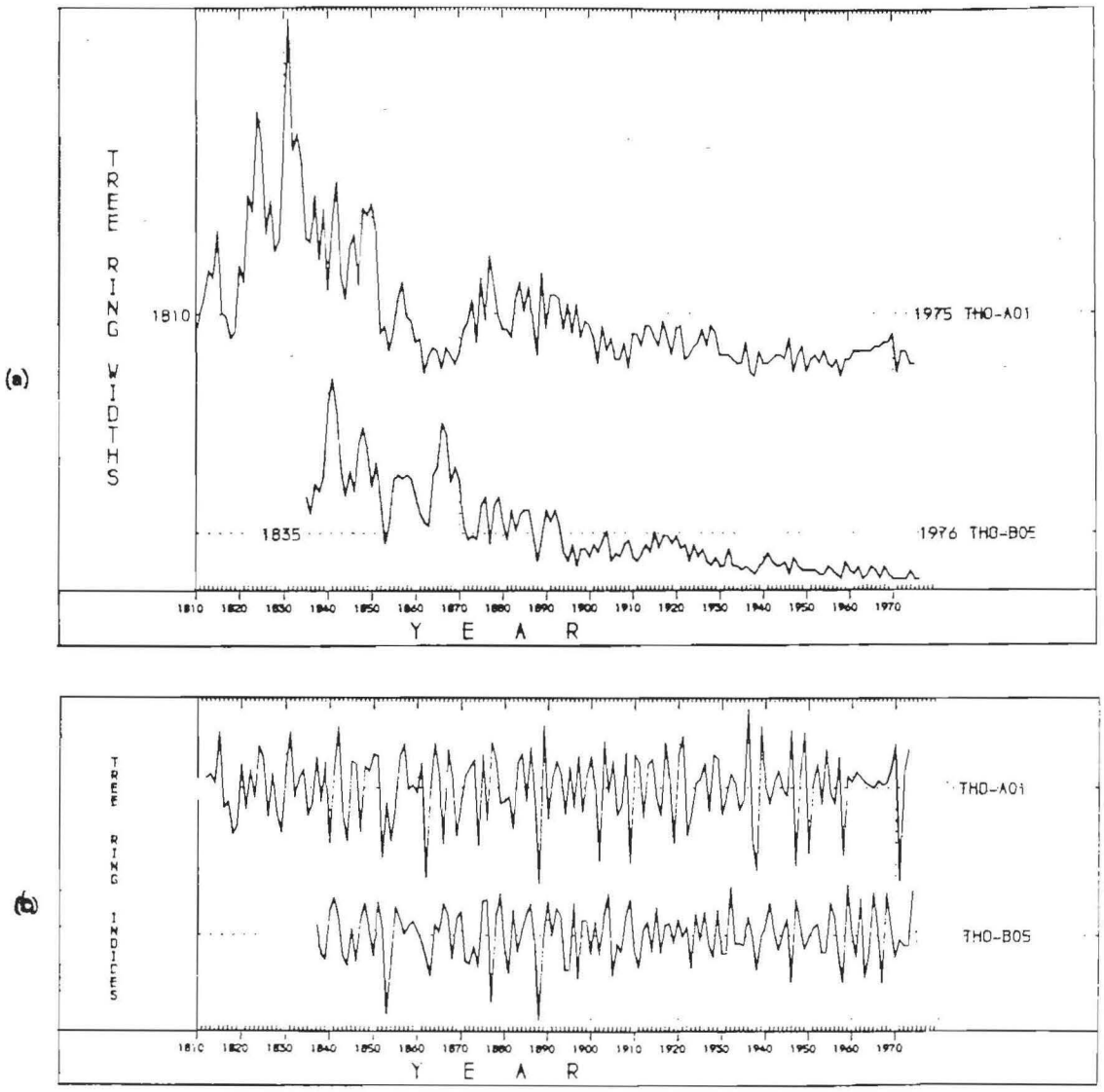

Fig 7. (a) The raw ring-widths of two samples, THO-A01 and THO-B05, whose felling dates are known. Here the ring widths are plotted vertically, one for each year, so that peaks represent wide rings and troughs narrow ones. Notice the growth-trends in each; on average the earlier rings of the young tree are wider than the later ones of the older tree in both sequences.

(b) The *Baillie-Pilcher indices* of the above widths. The growth-trends have been removed completely.

REFERENCES

Baillie, M G L, 1982 *Tree-Ring Dating and Archaeology*, London.

Baillie, M G L, 1995 *A Slice Through Time*, London

Baillie, M G L, and Pilcher, J R, 1973, A simple cross-dating program for tree-ring research, *Tree-Ring Bulletin*, **33**, 7-14

Hillam, J, Morgan, R A, and Tyers, I, 1987, Sapwood estimates and the dating of short ring sequences, *Applications of tree-ring studies*, BAR Int Ser, **3**, 165-85

Howard, R E, Laxton, R R, Litton, C D, and Simpson, W G, 1984-95, Nottingham University Tree-Ring Dating Laboratory Results, *Vernacular Architecture*, **15 - 26**

Hughes, M K, Milson, S J, and Legett, P A, 1981 Sapwood estimates in the interpretation of tree-ring dates, *J Archaeol Sci*, **8**, 381-90

Laxton, R R, Litton, R R, and Zainodin, H J, 1988a An objective method for forming a master ring-width sequence, *P A C T*, **22**, 25-35

Laxton, R R, and Litton, C D, 1988b *An East Midlands Master Chronology and its use for dating vernacular buildings*, University of Nottingham, Department of Archaeology Publication, Monograph Series III

Laxton, R R, and Litton, C D, 1989 Construction of a Kent Master Dendrochronological Sequence for Oak, A.D. 1158 to 1540, *Medieval Archaeol*, **33**, 90-8

Litton, C D, and Zainodin, H J, 1991 Statistical models of Dendrochronology, *J Archaeol Sci*, **18**, 429-40

Pearson, S, 1995 *The Medieval Houses of Kent, An Historical Analysis*, London

Rackham, O, 1976 *Trees and Woodland in the British Landscape*, London