NOTES

1. *Recording Work at Kirkhead Cavern*
By PERCIVAL TURNBULL

The important Late Upper Palaeolithic site of Kirkhead Cavern (SD 39107567) has lately been the cause of much controversy, prompted partly by criticism of the techniques of a recent palaeo-environmental analysis and partly by the problems of interpreting a stratigraphy of which the upper half has been removed by successive excavators in the nineteenth century and in the 1970s. The decision by HBMCE to fill in the eroding trenches of past excavations and to protect the surviving stratigraphy with a covering of inert material led Cumbria County Council, in May 1989, to record the present condition of the cave and its environs.

A photographic record was made of the cave and was augmented by plans, profiles, and sketch sections of the exposed trench faces. The cave appears to be a simple solution hole, and there is no real evidence for the effects of marine erosion which have been claimed in the past. Most of the surviving deposits are of laminated clays, usually considered to belong to Godwin's Zone III, overlying gravels and polished boulders, which lie upon the bedrock and represent the activity which formed the cave at its present size. Traces of the upper stratigraphy do survive, particularly the scar of the stalagmite floor and the remains of a breccia blocking by the cave mouth. The actual conformation of the surviving stratigraphy is complex and convoluted, but it is basically in accord with the description by Gale and Hunt in PPS 51, 1985, pp. 283–304.

The records are now deposited with the Cumbria Sites and Monuments Record (SMR no. 2415).

2. *Flints from Murton, Asby and Orton Scar*
By CLARE I. FELL

Mr and Mrs E. Hinchcliffe found ten worked flints in their garden at Mill Cottage, Murton between 1948 and 1974. Since that date a flake of fine grained rock has turned up in the same place and a small core trimming flake of mottled grey flint with chalk cortex at one end was found in the topsoil during building operations at Hilton Mill farm in 1980. The garden is situated north of the Hilton Beck between the 244 and 228 metre contours east of the River Eden on the lower slopes of the Pennines at NY 733208.

The flints (Fig. 1) include four blades, chiefly of buffish grey translucent flint, prepared by a technique common in Mesolithic times. No. 1 is triangular in section and has a little retouch at the bulbar end and the edges show utilisation. No. 2 measures 40 by 12 mm and is obliquely blunted at the distal end, one edge damaged by use. No. 3 is of creamy grey flint and No. 8 is a truncated blade measuring 26 by 9 mm (unfortunately now missing). No. 4 is a chip of translucent grey/brown flint. No. 7 is a broad, angular flake of pinkish brown flint with a large white patch. It has steep retouch removing the bulbar end and further secondary working on two other sides. A small core remnant of mottled grey flint with a cone of percussion and a flake of whiteish buff flint were also found, but not illustrated here. In addition there are two flint arrowheads – No. 5 a crudely made leaf arrowhead of grey flint, perhaps never completed and No. 6 a fine lozenge, or kite shaped arrowhead, beautifully bifacially worked in translucent pale grey flint, measuring 44 by 18 mm (maximum) and registered 79.124 at Kendal Borough Museum. It is of a form found with inhumation burial G at the great Neolithic round barrow Howe Hill, Duggleby in east

Yorkshire where it was associated with a flint adze and an antler macehead.[1] A similar antler macehead was found by Canon Greenwell at Barrow 174, Crosby Garrett.[2]

Late Mesolithic flint and chert tools, including microliths, were found at various points in the Moorhouse Nature Reserve a few miles north of Murton.[3] These were associated with the horn-cores of cattle and assigned by pollen analysis to the latter part of Pollen zone VIIa. More recently microliths and other tools of Mesolithic affinity have been found in the limestone uplands between Shap and Kirkby Stephen.[4] Polished stone axes found at Middle Fell in Musgrave parish[5] and at Moor House, Warcop,[6] point to Neolithic settlement hereabouts. The finds from Murton suggest flint working and settlement close by, rather than accidental loss.

The Hinchcliffes also collected a piece of pale grey, opaque worked flint from Asby in 1970 giving a map reference of NY 695083 for a point on the scar above Potts Beck. Further worked flints were found in 1980 on Orton Scar at NY 631100. These include a fine serrated flake knife of mottle grey flint with silica gloss on both edges and three other flakes of grey flint from the same area, probably all Neolithic. Further finds from this area have been recorded by R.G. Plint,[7] C.A. Ellwood[8] and J. Cherry.[9]

Mrs Hinchcliffe has given all the above finds to Kendal Borough Museum, now under the management of Abbot Hall and renamed the Museum of Natural History and Archaeology.

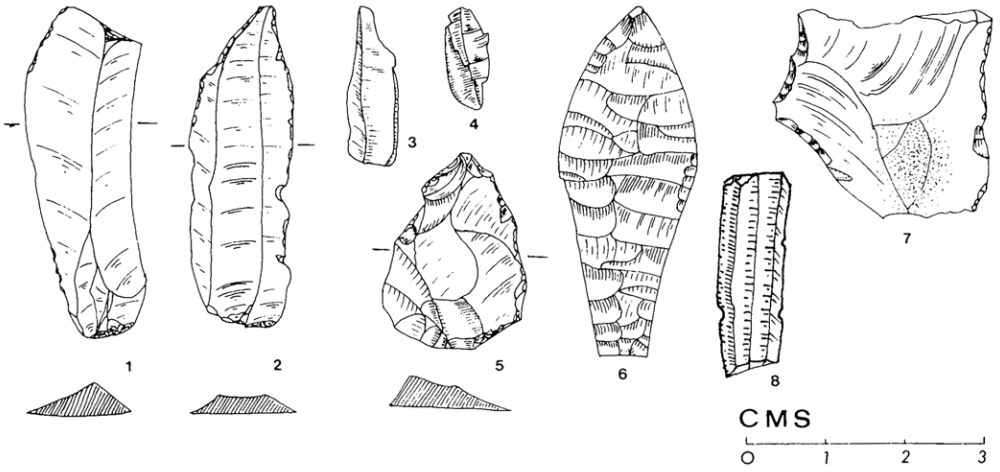

FIG 1. Flints from Mill Cottage, Murton drawn by J. Cherry.

References

[1] J.R. Mortimer, *Forty Years Researches in British and Saxon Burial Mounds in East Yorkshire* (*1905*), Barrow 273, p. 23–42, Pl. VIII, Fig. 64. (see also I. Kinnes *et al* (1983) *Archaeological Journal* 140, 83–108).

[2] W. Greenwell, *British Barrows* (*1877*), 389–391, Fig. 154.

[3] G.A.L. Johnson and K.C. Dunham, *The Geology of Moorhouse* (*1963*), 155, Fig. 31. These flints are in the Dept. of Geological Sciences, University of Durham.

[4] J. and P.J. Cherry, *Prehistoric habitation sites on the limestone uplands of Eastern Cumbria* (*1987*), CW Research Series II.

[5] *CW2*, lxxiv, 2.

[6] *CW2*, lxxiv, 2.

[7] *CW2*, lxxi, 2.

[8] *CW2*, lxxxi, 159, Fig. 2.

[9] J. and P.J. Cherry. *op cit.*, 22.

3. *Reworked axe from Little Strickland Hill, Witherslack*

By CLARE I. FELL

This interesting reworked fragment of a lightweight stone axe is characteristic of the careful adaptation of broken tools by Neolithic man in order to make useful alternative implements. The broken end has been flaked into a tang to fit into a wood, or antler sleeve, leaving the original cutting edge intact. This shows traces of side facets characteristic of Cumbrian axes and striations on the polished surfaces suggesting that it was used for wood working. The material from which it is made is macroscopically similar to pertrological Group VI, a fine grained tuff of central Lake District origin. Present maximum length 72 mm, width of cutting edge 52 mm, weight 122 grammes. It can be compared with a small, partly polished adze, or chisel from Howe Robin, Crosby Ravensworth.[1] The reworking of Group VI tools is evident in Cumbria[2] and also in Yorkshire[3].

The site is on the west side of Yewbarrow, a limestone ridge to the west of Whitbarrow, on the eastern side of the Winster valley at a height of approximately 100 ft (30 metres) OD. This is the more fertile side of the valley. Pollen analytical work by A.G. Smith[4] in nearby Helton Tarn and at Witherslack Hall Tarn found *plantago lanceolata* in pollen zone VIIa.

The axe was found by Mr A. Walshaw of Little Strickland Hill, Witherslack at map reference 3427/4853, in 1988 when digging out ground close to his house in order to erect a shed. It is thought by him that the axe was resting on the surface of the sub-soil about a foot below the modern ground level. The axe is at present in the possession of the finder.

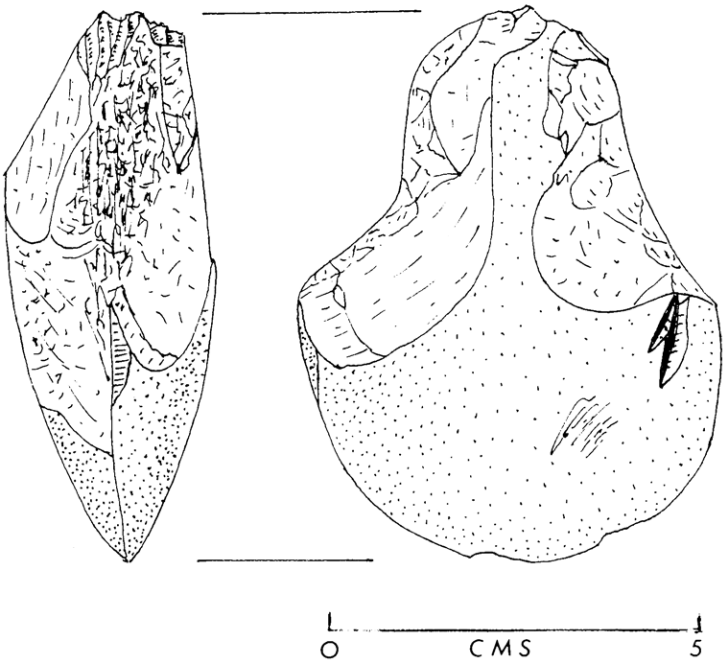

FIG. 1 The axe from Little Strickland Hill drawn by J. Cherry.

References

[1] *CW2*, lxxxv, 33–34.
[2] R.V. Davis in J. and P.J. Cherry, *Prehistoric habitation sites in the limestone uplands of Eastern Cumbria* (1987) C.W. Research Series Vol. 2., 15 and Appendix 2.
[3] T.G. Manby, In C.B.A. Research Report 23 *Stone axe Studies* (1979) especially 72–73.
[4] A.G. Smith. *New Phytologist* (1958) No. 57, 363.

4. *Rise How: An AMS date for the Iron Age Burial*

By R.L. BELLHOUSE

When human leg bones were found in 1982 below the floor level of the Roman watchtower on the summit of Rise How (*CW2*, lxxxiv, 52–54) a short length of femur was taken, the rest of the bones remaining in position when the excavation was completed. The intention was to have the sample dated. Approaches were made to Belfast and Birmingham but programmes at these places were full for at least the next two years. Dr Pearson at Belfast suggested that, as dating techniques were being steadily refined, there might be something to be gained from waiting a few years. This was the obvious course of action because the sample weighed 40 gm and enquiries at Harwell showed that a minimum of 300 gm of material would be needed for the normal radiocarbon method. Then in 1988 *British Archaeology* No. 7 contained an article describing the work of the Research Laboratory for Archaeology and the History of Art at Oxford and the AMS (accelerator mass spectrometry) method of dating. I wrote to Dr R.A. Housely at the University's Radiocarbon Accelerator Unit who, after some discussion, accepted the sample for processing. I received his report 17 April 1989 as follows.

Here are two AMS dates on the human femur from Rise How:

OxA–1818 Rise How, amino-acids from human bone, CW2 84 1330 ± 60

OxA–1935 repeat of OxA–1818 on same bone 1280 ± 60

Both dates are uncalibrated in radiocarbon years BP using the half life of 5568 years and an assumed $\delta 13c$ of –21% for bone.

The reason there are two dates is because when we dated the bone the first time we were so surprised at the result, *vis a vis* the stratigraphic position you reported, that we thought we had better re-sample the bone, repeat all the pre-treatment, and date the new sample to check that the first date was correct. The second date clearly confirms the first since the two dates are, in radiocarbon terms, contemporary and give a combined mean of 1305 ± 42. The approximate 2 sigma calibrated age range for the pooled value takes in the mid 7th to the late 8th century AD.

Provided the bone you sent us is from the context you indicate, there are only two other explanations: either the stratigraphic interpretation is different to what you describe, or the bone has absorbed environmental contaminants from the soil such that some of the dated carbon in the bone is younger than the carbon from the amino-acids in the femur. Bone can absorb contaminants in certain environments, as example when in deposits which are alternately waterlogged (not just wet) and aerobic. Such contamination can often be detected since the infra-red spectra of the bone extracts will show up chemical groups not associated with bone collagen. Given the discrepancy we plan to analyse the bone to see whether the IR shows

the presence of any environmental contamination. Even if contamination is present though it does not prove the dates are necessarily incorrect since the contamination could be the same age as the bone. But if the contamination is of a different age it could mean the dates have no bearing on the age of the burial. But if the bone hasn't absorbed soil contaminants the only remaining explanation is stratigraphic.

The stratigraphy is not in doubt – the burial was there before the Roman tower builders levelled the site and dug the trench for the clay and cobble foundations therefore the source of the contaminants must be human activity associated with the grain-drying kiln the remains of which occupied the inside of the tower. The consolation prize in this lies in the fact that while we are denied a firm Iron Age date for the burial we at least know the period of use of the kiln.

I would like to express my thanks to Dr Housely for the attention given to the sample and to the problems it raised.

PLATE 1. Rise How Tower 1 September 1982. Dr John Cole studies the leg bones, he is brushing the inner edge of the clay and cobble foundations.

5. *The Position of Milefortlet 10 (Silloth)*

By PERCIVAL TURNBULL

The position of Milefortlet 10 in the Cumbria coastal series is marked by the Ordnance Survey at NY 1188 5520. The report of a field investigator in 1955 indicated the presence of a poorly-defined rectilinear platform, represented by a slight bank 20cm high with evidence of a rounded corner. The site falls within a small parcel of irregular ground, which lies between East Cote farmhouse and the road which follows the modern sea wall. An application for planning consent for

construction of a bungalow on the site led to the digging of two trenches to establish the true nature of the platform and of any deposits which may exist on the site.

The trenches, each about 15m by 1m, were dug by a JCB 3C. Where necessary the bottoms and sides were then shovel-cleaned. Deposits in each were identical. About 5cm of topsoil, supporting a cover of coarse grass, overlay about a metre of soft, yellow-brown sand. This lay above 5cm of gravel, beneath which was at least another metre of hard, compact brown sand. All deposits were very clean, and the sand quite free of inclusions.

The upper sand deposit, loose and free-running, has all the appearance of an aeolian deposit; it is likely that the lower sand is a compacted version of the same. It would appear that the sequence observed represents dune formation, probably of two phases separated by flood-borne gravel. The platform observed by the Ordnance Survey is a truncated dune and is similar to several other dune-like mounds in the immediate area.

Records of the site are held by the Cumbria Sites and Monuments Record (SMR no. 352).

6. *Archaelogical work on the Papcastle Bypass*

By PERCIVAL TURNBULL

The proposed line of the Papcastle diversion transects an area identified as of high archaeological sensitivity. In particular, it passes closely to the north and west of the Roman fort and its attendant civil *vicus*, cutting in passing the line of the Roman road to Maryport.

Magnetometer surveying, commissioned from Bradford Geophysical, was useful in isolating areas of particularly high potential although, owing to the nature of the local drift geology, conditions were far from optimum and results not always clear cut. Strong anomalies in the area immediately north of the Derwent crossing, close to Papcastle sewage works, suggested a regular double row of pits at NY 1024 3125.

Small-scale excavations were undertaken by Cumbria County Council in September 1989, to investigate some of the more clearly-defined features in the road corridor.

An area 20m × 10m was excavated to examine the double alignment of pits. About 30cm of ploughsoil was removed by JCB to reveal a natural surface of loose fluvio-glacial gravel interspersed with veins of clay. This surface was carefully cleaned by hand to reveal, not the indicated pits, but a single ditch following approximately the same bearing as the supposed pit alignments. This ditch was entirely excavated within the limits of the 200m^2 trench. It proved to be fairly small in size, with an average width of about 1m, and to have filled gradually with a clay material, deposited in two distinct phases on top of a rapid primary silt of loose gravel. Unlike the topsoil, which contained appreciable quantities of modern pottery and tile, it was destitute of modern material but did contain several sherds of Romano-British pottery, including a piece of an East Gaulish cup; the dating of the feature therefore seems fairly secure. Iron nails were found in the ditch-fill at fairly regular intervals of little over a metre: these presumably represent the former provision of a timber fence in or alongside the ditch, and may also be the source of the strong and evenly-spaced magnetic anomalies which distorted the geophysical data. The ditch may be interpreted as a field boundary, the presence of the clayey fill suggesting arable use of the enclosed land, and represents the agricultural exploitation of the well-drained land by the river in the third century AD, at a time when the fort and *vicus* were occupied.

7. *The Roman Road across Leesrigg Pasture*
By R.L. BELLHOUSE

It is many years since I attempted to fix a line for the Roman road linking Maryport with Old Carlisle using a combination of first principles, written accounts and fieldwork.[1] Three years later more information came to light and I produced a correction necessitated by my seeing a stone pillar with two plaques at Fletchertown.[2] A year or two ago our member Mr. Denis Perriam, while researching in the Carlisle Record Office, came across an item in the *Carlisle Journal* for 4 October 1850 being a contemporary account of the placing of the stone and its inscriptions. He very kindly copied the main parts of the account for me and I reproduce them here without further comment.

> OLD ROMAN ROAD – The following is a copy of an inscription on a stone placed on Leesrigg Pasture 14 September 1850:–
> HERE WAS THE FAMOUS ROMAN MILITARY ROAD THAT CONNECTED ELLENBOROUGH AND OLD CARLISLE, TWO OF THE FORTIFIED CITIES IN HADRIAN'S BARRIER FROM SEA TO SEA CIRCITER A.D. CXX.
>
> [Speaks of invasion and building of Antonine Wall]
>
> . . . the Emperor Hadrian arrived in Britain about the year AD 120 and finding the difficulty of maintaining the defence across the higher isthmus contracted the limits of the empire by forming a rampart and trench between the Solway and the river Tyne, which was defended by a chain of forts stretching from the foot of the river Ellen to Tynemouth. These Roman stations were connected by roads or military ways, which generally ran along the more elevated ground and commanded a view to the north. The road which connected two of the most important of these stations, Old Carlisle and Ellenborough, ran across this field, and when the common was broken up in 1818 the road throughout was found entire . . . [goes on to give the later history of the Roman occupation of Britain] . . . The Roman Military way which this stone is intended to commemorate ran from Old Carlisle nearly parallel to the present turnpike road, as far as the Old Buck inn; it then crossed the present road, passing at a short distance to the north of the toll-bar and Waver Bridge, south of Waver Bank farm, then along a ridge to Leesrigg Pasture. It passed to the north of Baggrow and south of Brayton and Aspatria, running directly over the hill which is opposite the western lodge of Brayton House. It crossed over Oughterside Moor, but the western readers of the *Journal* must finish the route to Ellenborough. Another inscription on the stone is a record in memory of the late Mr. John Moore of Mealsgate, to whom this portion of the Roman road was allotted and through the kindness of whose family it is placed here.

References

[1] *CW*2, lvi, 51–56.
[2] *CW*2, lx, 25.

8. *Recent Roman Coin Finds in Cumbria and North Lancashire*
By D.C.A. SHOTTER

A **Carlisle** (Edenbridge)

Two coins have been recovered from the River Eden at Rickerby:

a) AR *Denarius*, Vespasian A.D. 74
Obv. IMP CAESAR VESPASIANVS AVG
Rev. [PON MAX] TR P COS V
Medium wear: *RIC* 77

b) *Dupondius*, Trajan A.D. 114–7
Obv. [IMP CAES NER TRAIANO OPTIMO AVG GER DAC PARTHICO P M TR P COS VI P P]
Rev. SENATVS POPVLVSQVE ROMANVS S C
Medium wear: *RIC* 676

For other finds at Edenbridge, see *Num. Chron.*[7] VIII (1968), 63–6 and *CW2*, lxxix, 8 and 11.

Information from Mr Colin Richardson of Carlisle Museum and Art Gallery.

B **Kendal**

a) Castle Grove

AR Antoninianus, Volusian A.D. 251–3
Obv. IMP C C VIB VOLVSIANVS AVG
Rev. FELICITAS PVBL
Little wear: *RIC* 205

As some confusion exists in the reports of this find, its location must be regarded as established only tentatively. It is not clear whether it was a single find, or whether other coins may have been involved; the hoarding of better-quality *Antoniniani* is not unusual (*Coin Hoards* IV (1978), 47ff).

Information from Mr W. Milne of Kendal Museum.

b) Lowndes Road

Æ *Radiate*, Maximian A.D. 295–6
Obv. IMP C M A MAXIMIANVS P F AVG
Rev. CONCORDIA MILITVM K△
Little wear: *RIC* (Cyzicus) 13

Information from Mr John Anstee of Kendal Museum.

Further coins have been reported from Kendal, though without precise find-spots:

c) Æ *Sestertius*, Marcus Aurelius A.D. 169–170
Obv. M ANTONINVS AVG TR P XXIIII
Rev. [COS III] S C (Roma)
Moderate wear: *RIC* 975

Information from Mr Colin Richardson of Carlisle Museum and Art Gallery.

d) Two coins found (probably with others) in the early 1950s: both are in a very poor condition:

Æ Claudius I A.D. 41–54
(Copy of the 'Minerva' *as* – *RIC* 65).

Æ Valens A.D. 364–375
GLORIA ROMANORVM type.

C **Kirkby Thore**

a) AR *Denarius*, Domitian A.D. 95–96
Obv. IMP CAES DOMIT AVG GERM P M TR P XV
Rev. (Minerva) IMP XXII COS XVII CENS P P P
Little wear: *RIC* 190

b) AR *Denarius*, Caracalla A.D. 200
Obv. ANTONINVS AVGVSTVS
Rev. (Caracalla left, as Sol) PONTIF TR P III
Little wear: Hill 434

c) AR *Denarius*, Caracalla A.D. 209
Obv. ANTONINVS PIVS AVG
Rev. (Concordia seated left) PONTIF TR P XI COS III
Little wear: Hill 1042

Information from Mr Colin Richardson, Carlisle Museum and Art Gallery.

N.B. Although these and the three *denarii* recorded from Kirkby Thore in my last report do not appear to derive from a hoard, that possibility should not be totally dismissed.

D **Borwick, Carnforth**

Manor Farm

During excavation of a Bronze Age Funerary Cairn in 1982, a very worn, illegible, *sestertius* of Trajan was recovered from top-soil (MF 82.001): it was an issue apparently of the period A.D. 103–111 (See A.C.H. Olivier in *P.P.S.* 53 (1987), 129ff.)

E **Silverdale**

My last report (*CW2*, xc, 282) referred to two coins of Constantine I found between Warton and Arnside (near Silverdale). These two coins are identical issues, and little worn.

a-b) *Obv.* CONSTANTINOPOLIS
Rev. Victory on prow TRP
LRBC I.59 A.D. 331

The find-spot is not close to any known site, and is about ¾ mile from the recovery-spot of two *denarii* of Alexander Severus in 1971 (*CW2*, lxxii, 333f.). There is nothing in the circumstances of discovery of the present coins to suggest that they were part of a hoard, though this remains a possibility.

F **Bolton-le-Sands**

Slyne Road

Æ *Dupondius*, Antoninus Pius A.D. 145–161
Obv. [ANTONINVS AVG PIVS P P TR P COS IIII]
Rev. LIBERALITAS [V] S C
Medium wear: *RIC* 803

Information from Mr Andrew White of Lancaster City Museum.

G Drumburgh

A very abraded Æ coin was found *c.* 1975. It is apparently a FEL TEMP REPARATIO issue of *c.* A.D. 350–360 (Hut-type).

H Maryport

Two coins have been reported – the former through Colin Richardson of Carlisle Museum, the latter through Ian Caruana of Carlisle Archaeological Unit.

a) AR Antoninianus, Traianus Decius, 1979 — A.D. 249–51

b) Æ Radiate copy, *c.* 1981 — *c.*A.D. 270–280

I Silloth

Ian Caruana (of Carlisle Archaeological Unit) has drawn attention to a reference seen by Mr Tom Patten in *Carlisle Patriot* for 15 May 1841. This mentions the discovery at Greenrow School, Silloth, in 1841 of a scattered hoard of 20–30 *Aes* coins of Vespasian, Trajan and Hadrian. The reference also mentions fragments of a pottery jar, which had presumably housed the coins.

J Stanwix

Carlisle Museum has records of two coins found at Old Croft, Stanwix in 1915 and 1935. (Information from Mr Colin Richardson).

a) Æ *Dupondius*, Antoninus Pius — ? A.D. 152–3
Obv. ANTONINVS AVG PIVS P P TR P [
Rev. (Libertas) COS III S C
possibly *RIC* 908 Museum *Acc. No.* 10–1915

b) Æ *As Gordian III* — *A.D.* 238–41
Museum *Acc. No.* 24–1935

K Cobble Hall

A group of 11 poorly-preserved Æ coins recovered by metal-detector in 1988 from the vicinity of Cobble Hall, and possibly close to the 'Western Stanegate' (*Britannia* XIII (1982), 284). The precise locations of the finds are lodged with Carlisle Museum and Art Gallery, but there appears to be no direct connection with other coin-finds in the area (*CW2*, lxxix 5–17; lxxxiv, 260). Information from Mr Colin Richardson.

a) Æ *As* Domitian, A.D. 91–96
(Legends illegible; very worn)

b) Æ *As* Domitian, A.D. 81–96
(Legends illegible; very worn)

c) Æ *Sestertius*, Trajan, A.D. 103–114
Obv.]TRAIANO AVG GER[
Rev. Illegible medium wear

d) Æ *Dupondius*, Trajan, A.D. 103–117
(Legends illegible; very worn)

e) Æ *Dupondius*, Trajan, A.D. 112–117
(Legends illegible; very worn)

f) Æ *As*, Trajan, A.D. 103–117
(Legends illegible; very worn)

g) Æ *Sestertius*, Hadrian, A.D. 118–120
Obv. IMP CAESAR TRAIANVS HADRIANVS AVG
Rev. Illegible little wear

h) Æ *Dupondius*, Faustina I; After A.D. 141
Obv. DIVA AVGVSTA FAVSTINA
Rev. Illegible medium wear

i) Æ *Dupondius*, Faustina II, A.D. 147–160
Obv. FAVSTINAE [AVG PII AVG FI] L

j) Æ *Sestertius*, Faustina II; A.D. 147–160
Obv. FAVSTINAE [AVG PII AVG FIL]
Rev. Illegible very worn

k) Æ Probably Valentinianic, A.D. 364–375
(Legends illegible; very worn)

It is not clear from the description of the find whether any of the coins might constitute the whole or part of a hoard.

L **Cliburn** (Penrith)

A further group of 27 coins has been found on the site of the hoard reported in *CW2*, lxxxvi, 205–5; details of these are given in a separate note; the coins consist of one radiate copy and 26 tetrarchic issues. The total of coins in the hoard is now 89.

M **Muncaster Castle**

A *solidus* of Theodosius was found *c.* 1800 at the Castle (*CW2*, xlviii, 219). Details are:

Obv. D N THEODOSIVS P F AVG
Rev. VICTORIA AVGG
TROBC
(*RIC* IX (Trier) 50 of A.D. 379–383).

(My thanks are due to Mr and Mrs P. Gordon-Duff-Pennington for allowing me to see the coin).

N **Ravenglass**

A *sestertius* of Trajan has been reported from the shore adjacent to the site of the Roman fort.

O **Kirkby Stephen**

A hoard of radiates has been recovered from the Kirkby Stephen area, though as yet, neither the precise find-spot nor the details of the coins have been disclosed. However, one coin which has been seen is a relatively uncommon issue of Marius (*RIC* 19 of A.D. 268). It is hoped that the full hoard will eventually be made available for identification and discussion.

A few other stray finds of Roman coins have been reported:

a) AR *Denarius*, Nero — A.D. 64–8
Obv. NERO CAESAR AVGVSTVS
Rev. SALVS (*RIC* 55) — moderate wear

b) AR *Denarius* (fragmentary), Severus Alexander — A.D. 222–4
Obv. IMP C M AVR SEV ALEXAND AVG
Rev. P M TR P [ ] COS P P (*RIC* 14, 32 or 42)
moderate wear

c) Æ Radiate copy: a largely illegible coin, probably of Tetricus II.

P **Great Strickland** *(app. NGR NY* 548224)

A hoard of 88 radiates has recently been reported; these will be the subject of a separate note. The area has also yielded a number of casual finds:

a) Æ *As*, probably Trajan — very worn A.D. 103–117

b) Æ *Sestertius*, Lucilla — A.D. 170–180
Obv. LVCILLA AVG [VSTA]
Rev. [PIETAS] S C (*RIC* (Marcus) 1755)
very worn

c) Æ Radiate, Gallienus — A.D. 259–268
Obv. GALLIENVS AVG
Rev. LIBERTAS AVG (*RIC* 233)
moderate wear

d) Æ Radiate copy, Tetricus I — A.D. 271–3
Obv.]IV[
Rev. Possibly Mars (as *RIC* 94 ?)
little wear

e) Æ Constantine I — A.D. 321
Obv. CONSTANTINVS AVG
Rev. BEATA TRANQVILLITAS VOTIS XX
PTR
(*RIC* VII (Trier) 368)

Q Shap

A little worn radiate of Victorinus has been reported from the northern side of Shap Village (A.D. 269–71).

Obv. IMP C VICTORINVS P F AVG
Rev. MARS VICTOR (*RIC* 53)

R Hincaster

Three coins have been reported from Hincaster – a *denarius* each of Vespasian and Antoninus Pius (not available for examination) and a little worn *dupondius* of Titus (under Vespasian, A.D. 77–8).

Obv. T CAES IMP AVG F TR P [COS VI CENSOR]
Rev. ROMA S C (*RIC* 781b)

S Kirksteads *(Hainings Farm)*

Two further coins have been reported which clearly belong to the hoard reported and discussed earlier (*Coin Hoards* IV (1978), 50–55; *CW2*, lxxxiv, 260–262).

a) *Obv.* MAXIMIANVS NOB CAES
Rev. SACRA MONET AVGG ET CAESS NOSTR PT
(A.D. 300–3; *RIC* (Ticinum) 44b)

b) *Obv.* IMP CONSTANTINVS AVG
Rev. SOLI INVICTO COMITI T|F / PLN
(A.D. 316–7; *RIC* (London) 89)

T Burrow-in-Lonsdale

A list of coins was included in an earlier contribution (*CW2*, lxxxvii, 241) which derived from the activities of metal-detector enthusiasts at the site. Although the exact find-spots are still not clear, it has been possible both to add to the list and refine the identifications; the present list therefore supercedes that in the earlier publication. 24 coins found in 1984–85:

Vespasian	3	(Æ – Sestertius, Dupondius, As)
Trajan	2	(AR – *RIC* 49ff; Æ – Sestertius)
Sabina	2	(AR – *RIC* 413a; Æ – Dupondius)
Antoninus Pius	4	(Æ – Sestertii)
Faustina I	3	(Æ – Sestertii (2), Dupondius)
Marcus Aurelius	5	(Æ – Sestertii (4), Dupondius)
Faustina II	1	(Æ – Dupondius)
Commodus	2	(Æ – Sestertii, including *RIC* 654)
Constantius I	2	(Æ – both GENIO POPVLI ROMANI issues)

9. *A Further Component of the Cliburn (Penrith) Hoard*

By D.C.A. SHOTTER

In an earlier volume of these *Transactions* (*CW2*, lxxxvi, 250–255), I reported the finding of a hoard of 62 tetrarchic issues in the grounds of Shaw Hall; since then a further 27 coins have come to light at the same spot, including a poor radiate copy of Victorinus.

		A.D.
1	Radiate copy, Victorinus *Obv.* IMP C VICTORINVS P F AVG *Rev.* PAX AVG (*RIC* 55)	269–271

Tetrarchic Coins

a) **London Mint** (15 coins)

A. GENIO POPVLI ROMANI (5 coins)

		Mint-mark	RIC	Date
Diocletian				
2	IMP C DIOCLETIANVS P F AVG		6a	300
Maximian				
3–4	IMP C MAXIMIANVS P F AVG		17	300
Galerius				
5	MAXIMIANVS NOBIL C		33	300
Constantius I				
6	IMP CONSTANTIVS AVG		54	305–7
B.	PROVIDENTIA DEORVM QVIES AVGG (3 coins)			
Maximian				
7–9	D N MAXIMIANO FELICISSIMO SEN AVG		77b	306–7
C.	GENIO POP ROM (5 coins)			
Constantine				
10–13	FL VAL CONSTANTINVS NOB C	PLN	88b	307

14	IMP CONSTANTINVS P AVG	PLN	104	307–12

D. ROMAE AETER (1 coin)

Constantine

15	FL VAL CONSTANTINVS NOB C	PLN	99	307

E. SOLI INVICTO COMITI (1 coin)

Constantine

16	IMP CONSTANTINVS P F AVG	T|F / PLN	121a	310

b) **Lyons Mint** (5 coins)

A. GENIO POPVLI ROMANI (5 coins)

Maximian

17	IMP MAXIMIANVS AVG	PLC	187b	305–7

Constantius I

18	CONSTANTIVS NOB CAES	B|_ / PL	55	298
19	CONSTANTIVS NOB C	PLC	178a	303–5

Galerius

20	MAXIMIANVS NOB CAES	A|_ / PL	53b	298

Severus

21	SEVERVS NOBIL C	PLC	199a	305–7

c) **Trier Mint** (5 coins)

A. GENIO POPVLI ROMANI (5 coins)

Diocletian

22	IMP DIOCLETIANVS AVG	S|F / ITR	523	302–3

Maximian

23	IMP MAXIMIANVS AVG	S|F / ITR	506	302–3
24	IMP MAXIMIANVS P F AVG	S|F / PTR	642b	305–7

Galerius

25	MAXIMIANVS NOBIL C	A|* / TR	262	298–9
26	MAXIMIANVS NOBIL C	S|F / 11TR	503b	302–3

d) **Aquileia Mint** (1 coin)

A. SACRA MONET AVGG ET CAESS NOSTR (1 coin)

Maximian

27	IMP MAXIMIANVS P F AVG	V| / AQS	33	301

All 89 coins in the hoard may thus be summarised:

Victorinus (*RIC* 55) and 88 tetrarchic issues:

London Mint (39 coins)

Diocletian	4	(*RIC* VI 6a, 77a (2), 81)
Maximian	16	(*RIC* VI 6b, 9, 17 (4), 77b (5), 85 (3), 90, 93)
Galerius	4	(*RIC* VI 14b, 15 (2), 33)
Constantius I	5	(*RIC* VI 14a (2), 32, 51, 54)
Constantine I	10	(*RIC* VI 79, 88b (5), 97, 99, 104, 121a)

Trier Mint (30 coins)

Diocletian	12	(*RIC* VI 138, 277a, 461, 468a, 505, 511, 522, 523, 544a, 576a, 579, 676a)
Maximian	3	(*RIC* VI 506, 519b, 642b)
Galerius	5	(*RIC* VI 262, 530b, 532 (2), 602b)
Constantius I	7	(*RIC* VI 328, 522, 530a (2), 535, 789 (2))
Constantine I	3	(*RIC* VI 718, 719b, 893)

Lyons Mint (12 coins)

Maximian	3	(*RIC* VI 92b, 187b, 206)
Galerius	2	(*RIC* VI 53b, 181)
Constantius I	5	(*RIC* VI, 55, 129, 178a, 186a, 202)
Maximin Daia	1	(*RIC* VI 192)
Severus	1	(*RIC* VI 199a)

Rome Mint (3 coins)

Diocletian	1	(*RIC* VI 103a)
Galerius	1	(*RIC* VI 99b)
Constantius I	1	(*RIC* VI 93a)

Ticinum mint (1 coin)

Constantius I	1	(*RIC* VI 30a)

Aquileia Mint (2 coins)

Maximian	2	(*RIC* VI 33(2))

Carthage Mint (1 coin)

Maximian	1	(*RIC* VI 25b)

	London	Trier	Lyons	Rome	Ticinum	Aquileia	Carthage	Total
294–300		4	2	1	1		1	9(10.23%)
300–305	14	19	4	2		2		41(46.59%)
305–312	25	7	6					38(43.18%)
Total	39	30	12	3	1	2	1	
	(44.32%)	(34.09%)	(13.64%)	(3.40%)	(1.14%)	(2.27%)	(1.14%)	

No further fragments of the container came to light.

10. *A Hoard of radiates from Great Strickland*

By D.C.A. SHOTTER

A hoard of 88 radiates has recently come to light in a field near Great Strickland (approximate NGR NY 548224). There was no sign of a container though some of the coins carry a deposit which might be the remains of a leather purse. The coins themselves are in a moderate condition, and some are very poor local copies. There is little therefore to distinguish this hoard from many others like it in the north-west (Shotter 1978; 1979), except perhaps for the presence of the relatively rare issue of the Gallic usurper, Laelian.

VALERIAN	1	(*RIC* 126 of A.D. 255–256)
GALLIENVS	11	(*RIC* 160, 166, 179(4), 256, 274a(2), 282; one illegible)
CLAUDIUS II	16	(*RIC* 14, 34(2), 38, 52 (2), 74, 91(2), 98, 102, 105; four illegible)
DIVUS CLAUDIVS	2	(*RIC* 262(2))
QUINTILLUS	1	(*RIC* 26)
AURELIAN	1	(*RIC* 56)
POSTUMUS	4	(*RIC* 53 of A.D. 259; 54 of A.D. 260; two illegible)
LAELIANUS	1	(*RIC* 6)
VICTORINVS	12	(*RIC* 53(2), 67, 75, 78, 114(4), 118; two illegible)
TETRICUS I	28	(*RIC* 68, 87, 90, 94, 100(4), 140; nineteen illegible)
TETRICUS II	8	(*RIC* 238, 239, 254(2), 264, 272, 280; one illegible)
Illegible and fragmentary radiates	3	

The percentage distribution amongst legible coins is thus:

a) *Legitimate rulers*		%
Valerian	1	(1.18)
Gallienus	11	(12.94)
Claudius II	16	(21.18)
Divus Claudius	2	(2.35)
Quintillus	1	(1.18)
Aurelian	1	(1.18)

TOTAL: 32 (37.65%)

b) *Gallic Rebel Emperors* %

Postumus	4	(4.71)
Laelianus	1	(1.18)
Victorinus	12	(14.12)
Tetricus I	28	(32.94)
Tetricus II	8	(9.41)

TOTAL: 53 (62.35%)

Although the distribution between legitimate and illegitimate rulers is not even, it is more so than is often the case; as commonly, issues of the Tetrici dominate the hoard.

References

RIC: H. Mattingly, E.A. Sydenham and C.H.V. Sutherland (Eds), *The Roman Imperial Coinage* (London, 1923–83).
Shotter 1978: D.C.A. Shotter, 'Roman Coin Hoards from Lancashire,' *Lancs. Arch. Journ.* I. 9–46.
Shotter, 1979: D.C.A. Shotter, 'Roman Coin Hoards from Cumbria,' *CW2*, lxxix, 5–17.

11. *Another gold coin from Scalesceugh*

By R.L. BELLHOUSE

This note is prompted by my reading Dr Shotter's article *Roman Coins in Cumbria* in *Transactions* (*CW2*, lxxxix, 41–51) in which is listed an aureus of Nero found at Scalesceugh in 1844. There is in existence a second aureus found at Scalesceugh: the way in which I was able to track down this coin was intended to be an appendix to my article *Roman Tileries at Scalesceugh and Brampton* (*CW2*, lxxi, 35–44) but the editor of the day excised it on the grounds that it was inappropriate to a report on Roman kilns.

The background briefly is as follows. In February 1961 I arranged some exploratory pitting at Scalesceugh. Eric Birley sent me a reference to the finding of a gold coin of the emperor Nero in about 1843 on the property of a Mr John Robinson. He added 'A hundred years is a long time, but perhaps one of your agents might possibly be able to track down John Robinson's heirs, and locate that aureus of Nero!' I thought this was a forlorn hope and did nothing, but Eric Birley had also asked me to have a scout round the church at Kirkbride and give an opinion whether or not there were surface indications of a Roman fort there. Anthony Whitehead and I took time off from Scalesceugh. We went to the Glebe and found Roman pottery. This act was the important link in a chain of circumstances which led to the location of the known aureus and the finding of another. The unexpected agent in this was our member the late Anne Hallifax-Crawford. She was one of three sisters from Airey Hall, Bowness-on-Solway, among whose ancestors were the Hallifaxes, father and son, who were successively rectors of Kirkbride.

We completed the work at Scalesceugh with the permission and kindly interest of Mr Frank Hamilton Keay Harrison the owner of the house and farmland. In the same year we began the series of excavations at Kirkbride reported at intervals in *Transactions*. Anne was very interested, she was the link between Scalesceugh and Kirkbride, she had the Hallifax collection of Roman pottery and knew all about the Robinsons and Harrisons of Scalesceugh as I later discovered. This came about by chance during a conversation when I related how my playing truant from one

excavation led to another in 1961. The year was 1969. She said, when she returned home, she would get in touch with Lady Lithgow who might be able to help. A few weeks later she wrote to me.

> Yesterday I had lunch with Lady Lithgow and the result is we have tracked down the Nero gold coin found at Scalesceugh and which was in the possession of Mr Robinson a yeoman farmer as mentioned by Mannix and Whellan. The Robinsons were the owners of the farm at Scalesceugh and one married a Harrison whose family eventually became ship-owners and lived in Scotland and Lady Lithgow was a Harrison whose father was very fond of Cumberland and built the present large house on to the original farm house. The coin in question is in the possession of Lady Lithgow's brother's wife, a Mrs Harrison who lives at Croft House Hellenburgh. Now the second gold coin I told you about, which I then thought might be the first, is reposing in a velvet case in the safe keeping of Lady Lithgow. On the case is inscribed "Found at Scalesceugh 1927" On the obverse CAESAR NERO AUGUSTUS, on the reverse IUPPITER CASTOR. Also I was told that lots of gold coins were found in about 1914 but a workman sold them to Clements for £1 but not any of the Harrisons knew or saw them. Lady Lithgow as a child remembered an altar which was obliterated and is at Wreay Hall, the home of her nephew Major Anthony Robinson Harrison. When workmen found Samian (1915–1916?) she remembers it was very deep down . . . top soil, clay, another layer of soil, then more clay and then Roman Road. The site was between the Lodge and an outbuilding.

Anne was a charming woman and a great friend. The news of her death in 1978 saddened me.

12. *Two Roman Mounts from Kendal, Cumbria*

By PHILIP CRACKNELL, Carlisle Archaeological Unit.

1. An Enamelled Copper Alloy Belt-Plate (Fig. 1, 1)

The belt-plate was found by a metal detector[1] on the banks of the river Kent (NGR SD 51358935), near Kendal, Cumbria, in November 1988. The find spot is one mile (1.6 km) south of the Roman fort at Watercrook.

Dimensions

Length – 86.5 mm
Width – 36.5 mm
Thickness (of side panel at outer edge) – 3 mm
Thickness (of semi-circular ends) – 2.5 mm

The openwork, cast, copper-alloy belt-plate is decorated with *millefiori*. It is in good condition with the majority of the *millefiori* still in place. The frame is made up of two rectangular side panels joined at each end by a pelta-shaped terminal. On this example, the central vertical bar, evident on other similar belt-plates, is missing, although the two pairs of studs which held it in place can be seen in the illustration of the rear view (Fig. 1, 1c). A circular loop projects from each corner, and originally anchored a chain (a three link chain on the joined examples from South Shields, [Allason-Jones and Miket 1984, 94, no. 310 and Pl. VI]), attaching this piece to those on either side. The central solid projection on the outer edge at each end originally contained enamel.

The two rectangular side panels are decorated with a series of individual florets which are made up of a central white dot surrounded by a red circle, which in turn is surrounded by eight white, roughly triangular petals set in a blue field (Fig. 1, 1d). Each side panel is divided in half by a transverse copper-alloy bar. On the left-hand side, the decoration in each half consists of 24 florets

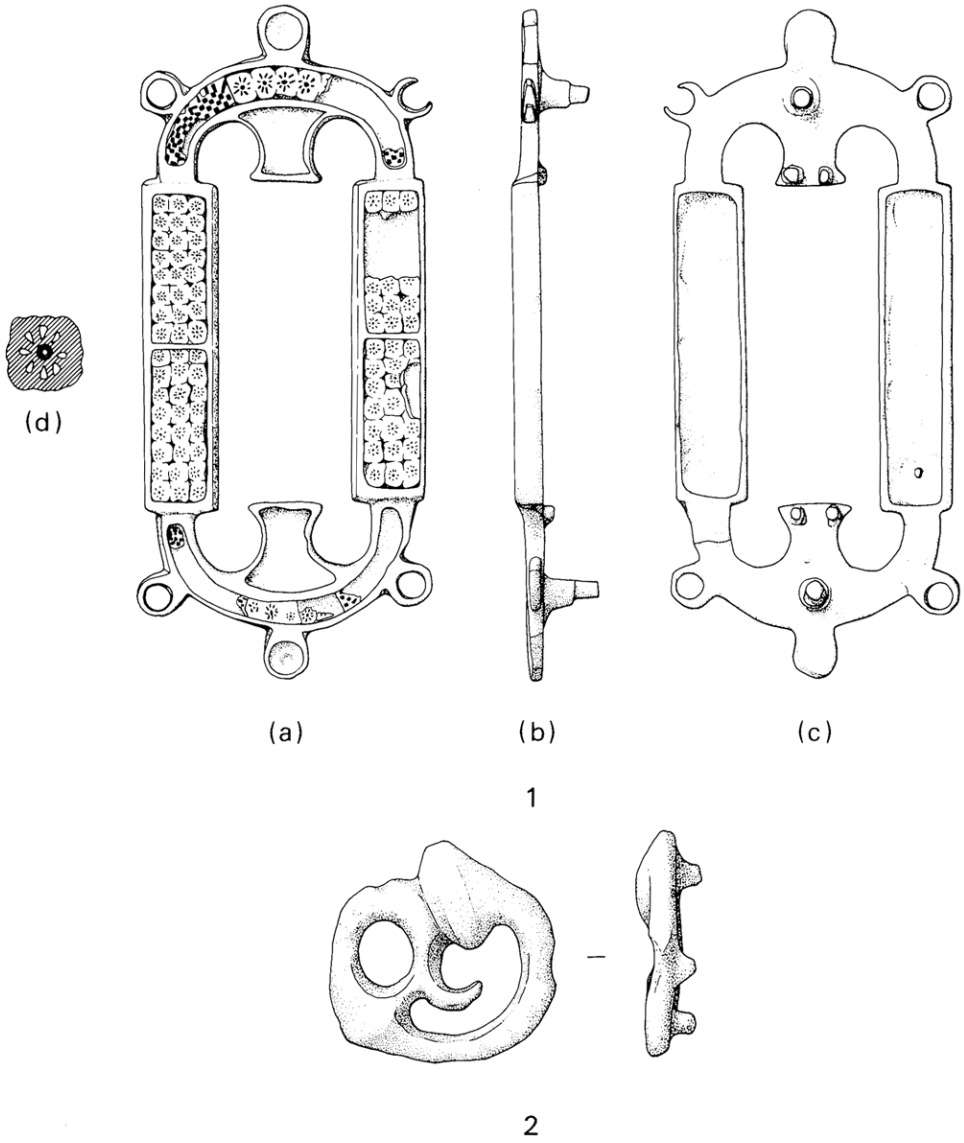

Fig. 1. (1) Enamelled belt-plate from near Watercrook Fort; (2) Mount from near Watercrook Fort. All 1:1, except 1d which is 4:1. (Illustration by Philip Cracknell).

arranged in eight horizontal rows of three. On the right-hand side the lower half contains 21 florets in seven rows of three, and the upper (now incomplete) contained either eight or seven rows. The semi-circular panels at each end were divided into three zones of enamel. Those on each side contained a black-on-yellow chequer-board enamel, while the central zone was decorated with 5 florets of the same type as those in the side panels. The two panels which project inwards from the semi-circular terminals also originally contained an enamel inlay, which is now missing. From the reverse, a stud projects near each terminal which probably secured the plate to a leather belt. This belt-plate has since been sold to a London dealer[2], by the finder.

There are a sufficient number of this general type of belt-plate from Britain, both enamelled and plain, for them to be usually described as a 'common' find. The majority have been recovered from military sites. From Cumbria there are at least nine examples (including this one) with a further twenty from sites along Hadrian's wall (See Cracknell and Padley, forthcoming). However, an exact parallel for the Watercrook belt-plate is difficult to find, as the group as a whole can be divided into several distinct types. The closest parallel is a single belt-plate from South Shields (Allason-Jones and Miket 1984, 96, no. 3.11 and Pl. VI). The belt-plates from South Shields were found in a late second century context, and similar examples from the German *Limes* have been dated to the last third of the second century through to the first half of the third (Oldenstein 1976).

2. A Copper-Alloy Mount (Fig. 1, 2)

Found by the same metal detector[1] a little to the south of the enamelled belt-plate find spot (NGR SD 51308928).

Dimensions

Width – 29 mm
Height – 28 mm
Maximum Thickness – 5.5 mm

A decorative, openwork mount based on the Celtic 'Trumpet' motif. The remains of three circular sectioned studs, equally spaced around the circumference, project from the reverse of the mount. The 'trumpet' motif, used in a variety of designs, is common on Roman copper-alloy work of the second and third centuries (Allason-Jones and Miket 1984, 222, nos. 3.766 – 3.768).

Notes and References

[1] The finder, Mr Hogg, of Kendal, allowed Mr Colin Richardson of Carlisle Museum and Art Gallery to examine the mounts, and Mr Richardson kindly allowed me to describe and illustrate them.
[2] Mr D.N. Adams acquired the belt-plate in March 1989, and subsequently sold it to an unknown private collector for a price in the region of £400.

L. Allason-Jones and R. Miket, *The Catalogue of Small Finds from South Shields Roman Fort* (Newcastle-upon-Tyne, 1984).
J. Oldenstein, 'Zur Ausrüstung römischer Auxiliareinheiten. Studien zu Beschlägen und Zeirat an der Ausrüstung der römischen Auxiliareinheiten des obergermanische raetischen Limesgebietes aus dem zweiten und dritten Jahrhundert n. Chr.' *Berichte Römisch-Germanische Kommission des Deutschen Archäologischen* Instituts, (1976) 57, 49–284.

13. *The Fosse of the Galwegians*

By R.L. BELLHOUSE B.Sc., F.S.A.

In August 1967 at the request of the late Kate Hodgson and with the help of Mr B.C. Ashmore I resurveyed the cairns and other features of the complex she had been investigating on White Lyne Common in the parish of Bewcastle. After completing our task we decided to go on to Christianbury Crag. On our way we had to cross a wide deep ditch running in a straight line from near the crag towards the south-west. I instantly pronounced it to be 'the Fosse of the Galwegians'

without having any idea how I came to know anything about a Fosse in this remote part of Cumbria. It worried me for a while but I forgot about it until about three years ago when I rediscovered my source, volume xxix of our *Transactions*, purchased when I became a member in 1953 because it contained an article by Mary Fair which might have provided a clue to the line of a Roman road near Ravenglass. The same volume also contained R.G. Collingwood's article *Roman Signal-Stations on the Cumberland Coast* and T.H.B. Graham's article on Turgis Brundos in which the Fosse is mentioned. I read the article today with greatly increased interest mainly because I am certainly older and perhaps a little wiser than I was in 1953 but I had considerable local knowledge of the Kershope area and Liddesdale because of the nature of my work there from 1943 to 1948.

I opened a file and gathered together some relevant and some not so relevent material, learning in the process a great deal about the early history of the area before the position of the border with Scotland had been finally determined. This Note therefore is a distillation centering round uncertainties, the local interpretation of the Fosse, its nature and location, and probable use as a land marker in fixing the bounds of a gift of land in Kershope.

In his article Graham outlines the early history of the English Manor of Liddel: Turgis Brundos was the son of William de Rossedale benefactor of Rosedale Nunnery and St Peter's Hospital, York. Turgis de Rossedale, surnamed Brundos was lord of the manor *circa* 1122, and was named as a witness to a charter giving land to the Hospital of St Peter of York by his father William. Graham gives a translation from the Latin:

> William de Rossedale grants his land of Creshope (Kershope) by these bounds: the fosse of the Galwegians and the stream (rivulus) running from thence into Liddel, and on the other side of the fosse straight to the high moor, and so by the watershed (per le cundos) of the moor as far as the old way of Roxburgh, and as the said way falls into Creshope from above the shielings that were Eadulf's.

Graham tentatively equated the fosse with the *meare dike* mentioned in a record of Elizabeth's reign which would be beyond the source of the stream in Creshope. Here is a danger sign – the word dike – was it a ditch (fossa) or an earth bank? In this part of the country on both sides of the Border dike always means a raised bank. Graham summarises:

> The other side of the fosse is the end remote from Kershope Head; the 'high moor' is the top of the Kershope Valley, and *le cundos* is the slope down which the rain water gravitated into the stream below; the old way of Roxburgh may be the existing road, which falls into Kershope at Burnt Shiels.

I had many tries at plotting the bounds on the map: none was in the least convincing. Burnt Shields (sic) is on the English side close by the modern road, and the 'said way' falling into Kershope here ought to complete the circuit assuming the river was one of the bounds, although this is not given in the charter. As to the 'watershed', given its true meaning, with the river as the north bound, the south bound might be defined by marking the sources of all the minor streams flowing to it. This did not work, it outlined a huge area of more than five square miles which included the summit of Glendhu Hill (1,684 OD) and made nonsense in the Burnt Shields area. It became clear to me that the Border had to be ignored and the Kers Hope had to be seen for what it was – a well defined valley, seven miles long and nearly two miles wide in places, falling into Liddesdale. Pursuing the ditch/dike idea for a moment I see perhaps some support from the extracts from a confirmation charter *circa* 1165 given on page 54, a gift of 42 acres and water rights

> . . . xlii acras inter Esch et Lidel, ubi Esch et Lidel conveniunt; et libertatem aquae a fossa de Lidel usque ad ecclesiam de Lidel. Ex dono Ran. de Sol., ecclesiam de valle Lidel et ecclesiam de Donint. juxta Bertonam.

The explanation (p. 55) is that the fosse of Lidel is the Railzie or Railey an *abrupt ridge* extending from Ryeleahead to Liddle Bank. The church of Lidel is said to be Canobie Priory but the church

of the vale of Lidel was apparently at Castleton two miles upstream from Newcastleton. I mention this because Dr Grace Simpson and I spent a day in July 1988 exploring this area following up an idea of the late Paul Wilson that the churchyard at Castleton without any church lay over the site of a Roman fort. Close by on a high bluff commanding the river stands an imposing earthwork – Liddel Castle (Site of) on the map, thought to be Ranulf de Soule's residence. We had travelled via Bewcastle and Kershope and the scenery brought back memories so I resolved to return one day and walk the hills.

In the meantime I thought I could do no better than to go back to the original Latin text and hope for inspiration. Dr Simpson very kindly copied it out for me from the Calendar of Charter Rolls.

> . . . per fossam Galwalensium et per rivulus de illa fossa cadentum usque in Lidel et ex altera parte fosse recte usque in altam moram et sic per le cundos de la more usque in antiquam viam de Rochesburc et sicut ipsa via cadit in Creshope de super scalingas que fuerunt Eadulfi.

The prepositions have various meanings, my choice is deliberate, imagining myself standing at the starting point and explaining the bounds to practical people – 'The bounds are defined . . . by means of the fosse (where we are standing) and by means of the little stream from that fosse falling all the way to Lidel and out of the other side of the fosse straight all the way to the high moor and this way by means of the slope of the moor all the way to the old road from Rochesburc and just as the road itself falls into Cresope (the hope or the burn) from above the shielings that were Eadulf's.'

The trap I fell into was to expect to find a big ditch somewhere on the course of the Kershope Burn, possibly meeting it an an angle as one would mark a particular point with a cross, as the recognisable starting point. On one side the burn would fall down to Lidel, from the other side upstream to the high moor, thus using the whole length of the burn as a bound. Hence my attempt to define the 'watershed' which from this line of thought ought to form another bound. But the Kershope Burn is a big river not a *rivulus*. The fosse, its principal features and its precise location, is the central problem. It must have been a well-known landmark to have attracted a name older than the date of the charter. How big was the area? There is a hint in the text which continues:

> Et si pastura infra illorum divisas illis non sufficit, in foresto meo pasturam sine occasione habeant . . .

The grantor seems to be aware that the area might not always provide enough natural resources. It seemed I would have to cross the Border in search of the fosse and yet remain within Cres Hope. Both Dr Simpson and Dr Breeze drew my attention to the entry for Castleton Parish in RCAM for Scotland describing a linear earthwork near Carby Hill (Para. 128 p. 98) which appeared to solve the problem although the writer ends his description with the words 'It is thus tempting to identify the earthwork with the '*fossa Galwalensium*' of the charter.'

> This work, *a ditch and a bank* (my italics) which measures about 15 ft. in overall breadth and is markedly sinuous in its alignment, originates in a moss at the head of a small burn which, after a course of about a mile, enters Liddell Water 650 yds. S. of Mangerton. From this starting-point it runs generally southwards, swinging round the west side of Carby Hill below the quarry, regaining the shoulder south of the summit, crossing the highway from Newcastleton to Kershope Bridge 185 yds. SE of Hillend Cottage, and finally dipping down the steep slope to the Kershope Burn. Its course thus suggests a land-boundary serving to define the E. side of an area of ground lying in the angle of Liddell Water and the Kershope Burn, with the small burn above Mangerton completing the system on the N.; and it is consequently interesting to note the close correspondence that obtains between the natural features of this ground and the kind of terrain implied by a 14th-century charter confirming a 12th-century grant of land somewhere in this immediate vicinity. As has been described above, a small burn (*rivulus*) and the earthwork (*fossa*) are both present, and adjoin one another just as they do in the charter; the higher ground on the S. shoulder of Carby Hill might well

represent the high moor (*alta mora*) the old way of Roxburgh (*antiqua via de Rochesburc*) could not have been far off if it led to the existing crossing place at Kershope Bridge, and more particularly if it approximated to the line of the modern highway; while the Kershope Burn and Liddel Water are likewise in their correct relative positions. The occurrence of the place name Shielsteads Hill, just N. of Kershope Bridge, should also be noted for comparison with Eadulf's shielings (*scalingas que fuerunt Edulfi*).

As a consequence of this possible identification of the Fossa Galwalensium the writer assigns the fosse to the early Middle Ages.

The fit is almost too good to be credible; one may wonder why, if the fosse was there at the time of the gift, it was not itself used as one of the bounds, a reasonably direct line from the head of the *rivulus* to the Kershope Burn, it would have made little difference to the extent of the area designated which I reckon to be about 900 acres. If the fosse came after the date of the charter the fosse is something else. The first choice must be the oval walled enclosure with hut circles on the summit of Carby Hill. The hill is a very conspicuous feature of the countryside rising to 875 ft O.D. The first snag in developing the case is that the hill might be the 'high moor' of the charter but I do not think so because its south shoulder, as in the extract quoted above, lies beyond and below the summit. However, ignoring this for the moment the bounds would start from a clearly defined landmark, the fosse, run from one side (northwards) to the *rivulus* falling into Lidel, from the other side (southwards) down the slope, watershed, ridge or whatever *le cundos* would signify here, to fall into Kershope.

The second snag is that there are other *rivuli* flowing west from Carby Hill: one might choose the one, joined by others, flowing by Abbottshaws and Flatt into Liddel, then from the other side of the fosse, that is, going east, the high moor would more aptly be Blinkbonny Height, 364 ft O.D. Again *le cundos* might be the ridge or watershed, according to the contours, running a little east of north, and somewhere here perhaps, was once the old way from Roxburgh crossing the watershed and falling into Creshope – the valley.

In July 1989 Dr Simpson and I returned to Liddesdale. We had a wide ranging discussion with Dr Michael Robson at Ovenshank. From the garden of his home on a bluff overlooking the Liddell Water he pointed out to us the general line of the old way of Roxburgh from near Castleton via Dykecrofts and Hillhouse towards Blinkbonny and beyond. Later in the day we ascended Carby Hill from Hillend pausing to assess the shallow ditch thought to be the Fosse of the Galwegians. Next day we walked the moor from Shielsteads Hill to Erneside Crags hoping to see signs of ancient fields and bothies. The only satisfaction we got was the enjoyment of warm sun and a bone-dry moor.

The walled settlement on the summit of Carby Hill must be ancient, from its nature and name predating the time of the charter, and therefore it is surprising if it had no place in fixing the bounds of the gifts of land. If we disregard *Hill* which may be tautologic, *Carby*, spelt *Caerba* on the leaflets of the Liddesdale Heritage Association and pronounced locally *Ker-ba*, must derive from British (Cumric) *caer* = fort, or defended place. The name may be a hybrid because *caer* is a noun feminine and the qualifier following should suffer soft mutation. In modern Welsh a fortress is *caerfa* where the f is voiced. The name is clearly a survival in an area penetrated by the English who must have been aware that there were two sorts of foreigners – Bretwalas and Galwalas – and chose to attribute the fosse of the fort to the Galwegians.

14. *Henry Bradfoot of Carlisle*

By B.C. JONES

In *CW2*, lxxxviii, 133, I assigned a date 1174–1184 to a gift by Syerith, widow of Henry Bradfoot, to the church of St Patrick of Lambley and the nuns there, of a rent of 12d. a year during her lifetime and 5s. a year after her death, from a house in Carlisle, formerly in the occupation of

Arnold Rufus and next to her husband's house. As the witness list is headed by John, Prior of Lanercost the date cannot be right. Only one Prior is known by name before 1200. He was Simon, who is mentioned in letters of Popes Alexander III and Lucius III in 1181 and 1184, (*CW*2, xlviii, 92 and Prescot, *Wetherhall* 220, footnote). Our member, John Todd writes:- 'the only John otherwise known as prior is the witness of nos. 52, 112 and 115, (iii 8, v 23 and 26) in the Cartulary. The first of these charters is dateable, 1205 x 1229, possibly 1205 x 1211. It is a quitclaim to a Robert de Vaux. The other witnesses rule out Robert I and therefore the charter is after 1205 when Robert II came of age. The date x 1211 is suggested because the charter precedes no. 24 which is witnessed by Duncan de Lascelles, who sold his English lands about then. (Barrow, *Anglo Norman Era* 116). The others cannot be finely dated but the witnesses indicate dates in the late C12 or early C13. Have you then discovered an additional prior John?'.

I think not. In addition to Lambley Priory, Henry Bradfoot was a benefactor of Melrose Abbey. By a charter, for which unfortunately the witness list is incomplete, he granted to Melrose, with the consent of his wife, Sigberith, '*totum managium meum in Karleolo*', for the benefit of their souls and the souls of all their forebears and friends. The witnesses were '[. . .] filio [. . .], preposito eiusdem ville, Alexander filio Ra [. . .] (C.R.O. Carlisle DX Summerson 38, quoting *Liber Sancti Marie de Melros* (ed.) C. Innes, Vol. 1. (Ballantyne Club, Edinburgh, 1837). Alexander, son of Ralph, was *prepositus* of Carlisle *c.* 1233 when he witnessed Henry of Tournai's quit claim to Adam of Aspatria of his right to a house *in vico hybernensium* in Carlisle (CW2, lxxxviii, 133) but he also occurs as a witness of a charter of Alan, son of Ouin, to John of Crofton of half of the land which he held from Robert son of Adam; the other witnesses were Adam son of Odard, Ralph de la Ferte, Gilbert his brother and William de la Ferte and inter alia Robert of Dunbreda, William son of Golsci and Robert of Crofton. (C.R.O. Carlisle D/Lons/L Additional Denton Deeds). Adam son of Odard, if Adam de Wigton, died about 1225 (James Wilson, *The Ancestor* Vol. 3, 75). Ralph de la Ferte, fl. 1200 x 1241, Gilbert, 1225 x 1256 and William, fl. 1223 x 1233. (Grainger and Collingwood, *Register and Records of Holm Cultram* 6). William, son of Goldsi was also a witness to Syerith's grant and Ouinn, with Walter the reeve, appear as 'men of the city' in 1210 in a dispute about dower land in Kirkbampton claimed by Mathilda, widow of Adam son of Enisant (who had died in 1200), and mother of Robert son of Adam. Mathilda was Mathilda Bradfoot and possibly a daughter of Henry Bradfoot. Mathilda was given a day to appear with those who were at her espousals. She put in her place Reginald (Bradfoot) or his brothers, Nicholas and Robert. (Coram Rege 1210 and Pipe Roll 1200, *V.C.H.*, 1, 388–90.). For Reginald, Nicholas, Henry and Alexander, sons of Henry Bradfoot see also Collingwood and Grainger, *Register and Records of Holm Cultram* 10–12. In the Pipe Roll of 1183, Henry Bradfoot was amerced 20s. for an exchange against the assize. (*V.C.H.* 1, 354.) and in 1190 Reginald Bradfoot paid 20 marks of the amercement of his father (*V.C.H.* 1, 368). It is possible therefore that Henry was dead by 1190.

The cartulary of Holm Cultram records grants by Nicholas, son of Henry Bradfoot, to Guy the merchant, (another witness of Syerith's grant to Lambley) of land and buildings *in vico Ricardi* in the city of Carlisle. At a later date, Guy gave the same burgage to Holm Cultram and handed over Nicholas' charter as a title deed. Guy had also acquired, by Nicholas's gift, a house *in vico Ricardi* next to the *baronia*, formerly of Peter de Tilliol, reserving a chief rent of 6s. 8d. to Robert de Stutteville and his heirs. Robert de Stutteville, lord of Torpenhow, probably died about 1213, so the reference to Peter de Tilliol in Guy's charter might be to Peter I, father of Simon, who died 1183. Simon died in 1204 and the estate was still in wardship in 1212. Peter II, Simon's son, succeeded to his father's estate some time after 1214. The date of Guy's charter could be 1204 x 1213. This is confirmed by the succeeding charter in the cartulary. John de Bolton, having married Guy's daughter Maria, granted to his father-in-law a life interest in the same property, this time described as lying next to the capital messuage of Simon de Tilliol. (Grainger and Collingwood *op cit.*, 4 and 12 and James Wilson, *Register of the Priory of St. Bees* 529 (Surtees Soc., 126).

If Henry of Bradfoot was dead by 1190, the earliest known reference to him occurs about 1177,

when he was a witness to a quitclaim by William son of Udard, Osanna his wife, and his son John and with the advice and consent of Robert de Vaux, to St. Mary of York and the church of St. Constantine of Wetheral, of his right in land between Wetheral and Warwick, called *Camera Constantini*. At the head of the witness list is the bishop of *Candida Casa* who was consecrated in 1154 and who flourished, 1154 x 1177. Adam *nuper vicecomite* also witnesses. Adam, son of Robert Troite, acted as sheriff on his father's behalf in 1173 and 1177. In 1174 he was said to be sheriff. He was sheriff again in 1178.

It is likely therefore that Syerith's charter to Lambley should be assigned to the early years of the 13th century, perhaps to 1200 x 1220. The full witness list is:-
John, Prior of Lanercost, Adam the Official, Robert son of Adam, Robert son of William, William son of Golci, Alexander son of Ralph, Adam son of William, Henry his brother, Roger son of Ralph, Robert of Carlatun, John of Crofton, Robert of Crofton, Robert Niger, Adam his brother, Guy the merchant and the whole chapter (capitulo) of Carlisle. Of these, it is perhaps worth noting that Bishop Hugh's confirmation of the second distribution of the properties of the see and the priory, 1220 x 1223, was witnessed by *Magister A. tunc officiale nostro* and *A. de Aspatricke, tunc Decano Carlioli* (C.R.O. Carlisle, TL 542/6. Liber Lacerat.). Robert son of Adam, if the son of Adam son of Enisant, took seisin of the half carucate of land which he held by charter of Henry II to Adam, *nepos* of the sheriff, 1186, in 1201 (*V.C.H.* 1, 388). Robert of Crofton, in 1214, paid 3s. for a carucate of land in Morton (*V.C.H.* 1, 418). A Robert Niger, tailor, in 1177 paid 100s. to be received into the borough. (*V.C.H.* 1, 346.) The reference to the 'chapter of Carlisle' is ambiguous. It could refer to the Priory chapter, to the chapter of the deanery of Carlisle or to *communitas* or body of leading citizens. Migne *Lexicon Manuale ad scriptores mediae et infimae Latinitatis*, gives under CAPITULUM – *hotel de ville, capitole, synode, salle capitulaire, chapitre, Capitula ruralia.*

If the house in Carlisle, from which the rent was to be paid to Lambley, was in Abbey Street or the *vicus hibernicorum*, and if the grant had been decided in the lifetime of Henry Bradfoot, then this still implies development in this part of the town towards the end of the 12th century.

15. *Carlisle Cathedral: Fratry watching brief, 1988*

By GRAHAM D. KEEVILL

The Fratry at Carlisle Cathedral lies to the south of the Norman nave, to which it was connected by cloister walks; these only survive in a fragmentary state. The Fratry and Cloister formed part of an Augustinian Priory, founded by Henry I in 1120. The Priory buildings passed into the control of the Dean and Chapter of the Cathedral after the Dissolution of the Monasteries. Thereafter the Fratry served numerous purposes, especially for storage (Perriam 1987, 129 and 136–8). The fabric is largely the original Norman work, though the windows are later insertions; the south wall is buttressed. The undercroft is currently used as a bookshop and tea room, while the hall above houses the Library of the Dean and Chapter and is used for concerts, exhibitions and other functions.

The undercroft was flooded by torrential rain in May 1988. A drain was cut around the south wall (Fig.1) to alleviate the immediate problem and prevent its repetition. A trench 0.45 m wide and 0.6 m deep was dug under the supervision of the author; a plastic pipe was placed in the trench, which was then backfilled with coarse gravel. This note describes and discusses the archaeological features observed during the work.

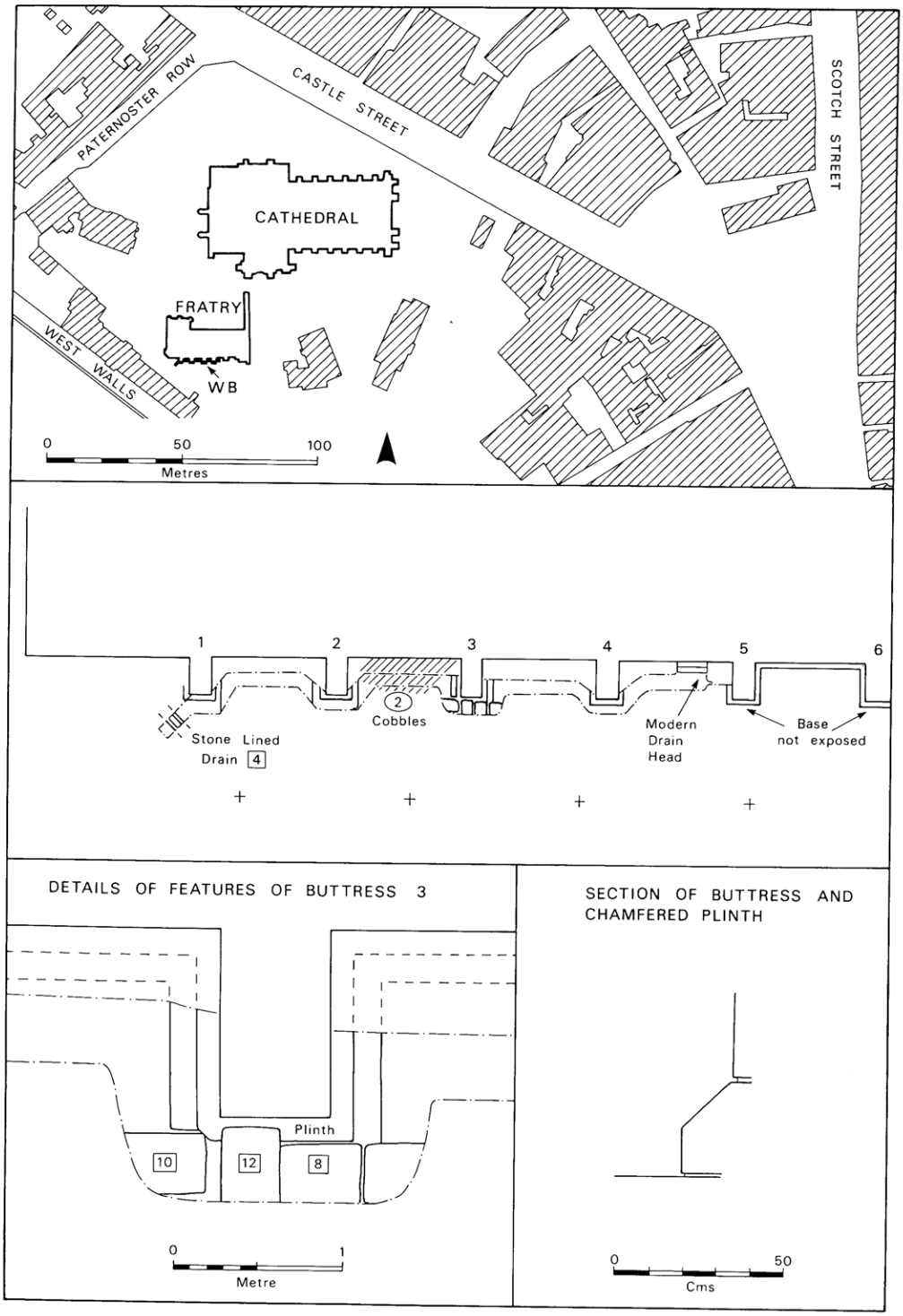
PATERNOSTER ROW
CASTLE STREET
SCOTCH STREET
CATHEDRAL
FRATRY
WB
WEST WALLS
0
50
100
Metres
1
2
3
4
5
6
2
Cobbles
Stone Lined
Drain 4
Modern
Drain
Head
Base
not exposed
DETAILS OF FEATURES OF BUTTRESS 3
Plinth
10
12
8
0
1
Metre
SECTION OF BUTTRESS AND
CHAMFERED PLINTH
0
50
Cms

FIG. 1

Archaeological Evidence

In all exposures the south wall and buttresses were found to sit on a chamfered plinth 0.14 m wide and 0.14 m deep lying 0.2 m on average below the modern ground level. The plinth rested on a basal course of massive sandstone blocks. This was exposed in one place by the south wall (Fig. 1:2), where it extended 0.16 m beyond the plinth. The base could not be traced below buttress 4, possibly due to the depth of excavation, and was not exposed at buttresses 5 and 6 (Fig. 1:2). At buttresses 1–3 the base was 1.3 m–1.33 m wide, extending 0.2 m laterally to either side of the plinth. The southern extent of the base lay beyond the trench edge at each of the exposures, suggesting that the outward thrust of the buttresses was carried on massive foundations.

The basal course of buttress 3 was overlain by a feature at least 1.2 m long and 0.37 m wide, F8, consisting of well-dressed but unmortared sandstone blocks 0.2 m deep, running eastwards beyond the trench edge. F8 was overlain by a single sandstone block, F12, aligned north-south and continuing beyond the trench edge. The stone measured 0.43 m × 0.38 m × 0.16 m and had been carefully cut to overlie the plinth chamfer (Fig. 2), but it was not possible to determine whether it represented part of a second course above F8 or a separate linear feature continuing to the south.

A layer of larger cobbles, 2, was found 0.28 m below the modern ground surface between buttresses 2 and 3. The layer was up to 0.15 m deep. No direct relationship could be observed with the plinth or basal course of the wall and buttresses. The cobbles were overlain by a single sandstone block, F10, which also overlay the basal course.

A small sandstone-lined drain was found 0.3 m below the modern ground surface immediately south-west of buttress 1. The drain ran north-west to south-east and could be traced with drain rods for at least 10 m to the south-east. The internal space of 0.15 m square was defined by walls of small sandstone blocks giving an external width of 0.36 m. The drain was floored and capped with 0.05 m–thick sandstone slabs, producing an external depth of 0.25 m.

FIG. 2

Discussion

Excavations around the south and west sides of the Cathedral in 1985 (McCarthy 1987) and 1988 (Keevil 1989) have established that the Norman ground level lay *c.* 1 m below the present turf line, with a slight slope downwards from north-east to south-west towards West Walls. The Norman ground level around the Fratry is not known but it is clear that the chamfered plinth, and possibly the basal course, would have been above ground. Indeed, the 'undercroft' is unlikely to have been built as a cellar, and should be seen as a ground floor with the hall at first floor level.

It follows from the above that all the other features recorded in the drainage trench post-date the medieval construction; this is indeed demonstrable in the case of the features associated with buttress 3. Unfortunately none of the features can be dated more specifically as no artefacts were recovered.

The linear features, F8 and F12, are interpreted as walls associated with a lean-to structure between buttresses 3 and 4. The sandstone block, F10, did not form part of the structure although it might have been derived from it, i.e. by collapse or destruction. It is notable that Nicholson's reconstruction drawing of the Priory precinct in the medieval period (*The Builder*, 23 February 1907) does show a structure between buttresses 3 and 4, but his source for drawing this is not known. The function and construction date of the structure cannot be determined without further excavation.

References

Keevill, G. D. 1989, *Carlisle Cathedral Excavations 1988: Interim Report*
McCarthy, M. R. 1987, 'Excavations at Carlisle Cathedral' *CW2* , lxxxvii, 270–1
Perriam, D. R. 1987, 'The Demolition of the Priory of St Mary, Carlisle, *CW2*, lxxxvii, 127–58

16. *A Possible Medieval Votive Coin from Cummersdale*

By IAN CARUANA

Several years ago a medieval sterling penny of Edward I was found in river gravel in the flood plain of the river Caldew just south of Cummersdale. The site of the find (at NY 394523) appears to have been an old river channel left by the river as it has moved eastwards. A slight dip, marking the old channel, can be seen on the ground. Support for this idea is given by the position of the parish boundary between Cummersdale and St Cuthbert's Without. The boundary follows the river for most of its length but at this point the boundary cuts across the meander leaving a small portion of the west bank of the river in St Cuthbert's parish. The reason is probably that the parish boundary was established when the channel was still in its former position and the boundary fossilises this state of affairs.

The Coin

Obv. +EDW R ANGL D S HYB
Rev. CIVITAS CANTOR

Fox Class IIb (North 1960, No. 1015) dated *c.* 1280.

The coin was bent doubled when found, though it subsequently snapped in two pieces while being washed.

The Significance of the Find

At first sight the discovery of this relatively common medieval penny presents no special insights. It reinforces the historical documentation of the village which goes back at least to 1227 (*EPNS* Cumb. I, 130) and abundant medieval pottery from the period 1150–1250 has been found in field walking in and around the village.

The most important feature about the coin is the fact of it being bent double. Although easy to dismiss as a product of damage in the river after loss, a little thought makes it apparent that this is not a particularly likely occurrence. A second theory, that bending was a way of testing the fineness of their silver, can be dismissed since copper alloy tavern tokens were bent in the same fashion (Merrifield 1987, 110).

Folding medieval silver coins is recorded in the accounts of saints' miracles. It was the practice to bend a coin over the victim of an illness or misfortune and invoke the help of the saint in effecting a cure. Once the cure had been achieved the bent coin was then the rightful property of the saint who helped with the cure. The bent coin, and not a substitute, should then be presented to the saint on a pilgrimage (Finucane 1977, 94–5). Of the known bent coins many are of early medieval, even pre-Conquest, date but the miracle stories attest the continuation of the practice at least to the end of the fifteenth century: in 1488 King Henry of Windsor [Henry VI] cured a Sussex vicar (Salzman 1925, 80–1).

The Significance of the Findspot

While the event behind the bent coin is understood to the extent of being documented, the next step, to account for its appearance in the river, is more speculative. Merrifield (1987, 109–10) points to a number of other examples of bent silver coins and lead tokens (the offerings of the poor?) coming from the Thames. He draws a parallel with the deposition of pilgrim badges at some of the same points. There is a suggestion that one of the elements of the pilgrimage might have been the casting of a pilgrim badge, bought at the shrine, into the river at the point of departure for home (Spencer 1978, 250). Occasionally badges are also folded in the same way as the coins (Merrifield 1987, 113).

There may be parallels between the casting away of pilgrim badges and bent coins, but the London examples do not seem sufficiently numerous to suggest that this was as widespread a mode of disposal of coins as it was of pilgrim badges. It will be remembered too, that the bent coins were supposed to be presented to the miracle-working saint. However, the potency of offerings in water is widespread and widely recognised in archaeological contexts and, whatever the precise motive for the throwing of pilgrim badges into rivers and moats (Merrifield 1987, 109), it is open to speculation whether the casting of the saint's coin into water was not a direct offering to the saint, within a long-established and certainly pre-Christian tradition.

Pilgrim sites were plentiful in pre-Reformation England but no major ones existed in Cumbria. The nearest pilgrimage centres were Hexham, Jarrow, Durham, Lindisfarne, Ripon and York. Although there are hints of local pilgrimage to the Cathedral at Carlisle in the fifteenth century (Bouch 1948, 116–7) and to St Bees (Rawling 1976, 70) and Carlisle inhabitants certainly possessed pilgrim Badges (e.g. an ampulla from Ring Road excavations found by Miss Charlesworth in 1972 and a fragmentary St Michael from a sewer trench in Castle Street in 1984 – both unpublished) from distant shrines, some perhaps procured by paying others to make the pilgrimage (Ferguson 1893, 10, 23 and 35) it is perhaps unnecessary to associate offerings to saints with distant pilgrimages. The major northern saints, particularly Cuthbert, Mungo and Ninian, who may well have been the most popular objects of devotion (Tudor 1984) were well represented in Cumbrian church dedications and offerings could perhaps have been made locally. Holy Wells, many named after Ninian and Mungo, though without any very ancient authority, were thought to possess

curative powers (McIntire 1944). Local custom, as elsewhere, involved the deposition of bent pins in wells in later times (Rawling 1976, 65). Whether rivers were also an acceptable place for offerings can perhaps only be a matter for speculation at present.

Given the Edwardian date of this particular find one further variation is worth mentioning. At the end of the hawking season, pennies were bent over the hawks and, on St Hippolytus's Day, Edward I's hunting horses were placed under the protection of the saints by the same process (Salzman 1925, 73 quoting the household accounts of Edward I)).

Acknowledgement

I am grateful to Bruce Jones for reading a draft of this note and providing the references to medieval Cumbrians paying for pilgrimages. The speculations are, of course, my own.

Bibliography

Bouch, C.M.L. (1948) *Prelates and People in the Lake Counties* (Kendal).
Ferguson, R.S. (1893) *Testamenta Karleolensia* CWAAS Extra Series IX, (Kendal).
Finucane, R. (1977) *Miracles and Pilgrims* (London).
McIntire, W.T. (1944) 'The Holy Wells of Cumberland' *CW2*, xliv, 1–15.
Merrifield, R. (1987) *The Archaeology of Ritual and Magic* (London).
North, J.J. (1960) *English Hammered Coinage* 2 vols. (London).
Rawling, M. (1976) *The Folklore of the Lake District* (London).
Salzman, L.F. (1925) 'Some Sussex Miracles' *Sussex Archaeological Collections*, lxvi, 62–82.
Spencer, B. (1978) 'King Henry of Windsor and the London Pilgrim' *Collectanea Londiniensia. LAMAS Special Paper No. 2*, 235–64.
Tudor, V. (1984) 'St. Cuthbert and Cumbria' *CW2*, lxxxiv, 67–77.

17. *St Margaret's Tower, Staveley*

By PERCIVAL TURNBULL

A watching brief was maintained by Cumbria County Council during repair and consolidation work in April 1989 at St Margaret's Tower (SD 4723 9817). The tower is all that remains of the medieval church of St Margaret, said to have been founded in 1388, and otherwise demolished in 1865. The surviving remains are considered to be of late fourteenth or early fifteenth century date, and include on the east face a square-headed window of three trefoil lights with hood-mould and a small round-headed window, apparently not contemporary, to either side. Repair work involved the digging of trenches for soakaways around the base of the tower and two holes to the east. The trenches revealed only a rubble spread apparently associated with the nineteenth century demolition, while the holes to the east exposed the flagstones of the nave floor: the tower was attached to the west end of the church in the conventional manner and was not freestanding.

The records are now deposited with the Cumbria Sites and Monuments Record (SMR No. 3372).

18. *The Anchorite well, Kendal – recent changes*

By JOHN MARSH

This large well, in the limestone which makes up the western side of the Kent Valley in the modern town of Kendal, has caused interest in the past and mention of it can be found in Machell's diaries – *Antiquary on Horseback* (1963), Nicholson's *Annals of Kendal* (1861) and Curwen's *Kirkbie Kendale* (1900). More recent mention can be found in Winchester's *Cumbria Historic Towns surveys – Kendal* where a review of the evidence can be found. By its very nature, a deep continuous flow of water even in drought, the well has attracted the usual folk lore and legend. There seems no doubt on the evidence now available to us that this is the pre-reformation St Mary's Well and has an association with the first 'church' of the pre Norman 'Kirkby' in Strickland. The pre Norman church may have survived to the reformation and be the Chantry of St Mary – 'thold work' – recorded in the Survey of the Chantries of the Holy Trinity Church, Kendal in 1546.

The 1930s produced the Kirkbarrow municipal housing estate which surrounded the site with council housing and service roads. A block of buildings from the mid 18th century – Curwen records that Alderman John Shaw built the house in 1771 – was retained and made into Council housing.

The squared off water source is reported to have been about 2 metres deep until after the Second World War when the depth was reduced to a few centimetres by infilling with small stones because of danger to children. Surrounding the well were three yew trees which also attracted local legend to explain their history.

Recent political changes have resulted in the selling of the Council housing to the tenants. In the case of the Anchorite Well, this produced the situation in September 1989 whereby one of the purchasing tenants felled one of the yew trees to make a parking space for his motor car. The unfortunate destruction offered the opportunity to find the age of the felled tree by tree ring counting. This was carried out by Mr Martin Orram of the Kendal Civic Society in November 1990 when the tree was being sawn up, 230 years growth (plus or minus 5 years) was noted. From this evidence it can be presumed that the planting of the tree predated the building of Mr Shaw's house of 1771 by only a few years.

19. *A mid-fourteenth century coin hoard from Rickerby, Carlisle*

By C. RICHARDSON and M.R. MCCARTHY

While operating metal detectors in a field of rough pasture at Rickerby, Stanwix Rural Parish[1] on 18 October 1986, Messrs N.M. Marshall and K. Jones of Carlisle recovered the first group of what eventually proved to be a hoard in the region of 2,300 coins[2]. This important discovery was reported to the first of the writers and the Coroner on 20 October 1986. The British Museum was also notified. The coins were submitted for examination to Dr B.J. Cook, Department of Coins and Medals at the British Museum, and were declared Treasure Trove at an Inquest held in Carlisle in October 1988. Immediately following the initial discovery an approach by one of us (CR) was made to the land agent with a view to carrying out an archaeological investigation of the site. Unfortunately, an agreement satisfactory to all parties concerned could not be reached.

The area in which the coins were found had suffered considerable disturbance over the years, including the removal by machine of a large portion of the field, and its subsequent use as a rubbish tip. A long wooded mound had occupied part of the area and this had been levelled some years before. The finders encountered large quantities of modern rubbish at varying depths during their work. The bulk of the coins were recovered from an area measuring 21 by 12 metres and the individual finds plotted on each visit. The coin distribution pattern revealed three concentrations

with a spread of coins down-bank. This suggested to the finders that this was the direct result of the mound being pushed in that direction[3]. Pottery sherds were picked up, one of which bears the impression of a coin. This established that the coins had been buried in at least one container. It is likely that the vessel had been buried in the mound, and that during the latter's destruction, the pot had been smashed and the coins dispersed over a wide area.

Most of the coins (Plate 1), apart from the continental sterling imitations, are of silver of the sterling standard (i.e. made of 92.5% fine metal). They comprise pennies, halfpennies and farthings of the reigns of Edward I, II and III (AD 1272–1377), the majority falling within the date range 1279–1352. The earliest coin is a Short Cross penny of John in the period 1194–1205, although this can be regarded as an 'anomalous piece in the context of the rest of the find'[4]. The earliest coins are of the first class of the sterling penny introduced by Edward I in 1279, while the more recent coins are those of Edward III's Fourth or Pre-Treaty coinage, Series C, issued in 1351–2. Coins of Alexander III of Scotland (1249–86), are well represented in the hoard, as are various Irish and continental issues. The hoard is notable for the large numbers of halfpennies and farthings it contains when compared with other fourteenth century hoards. The Berwick minted farthings are of special interest. They are almost all Class 8 and date to *c.* 1344; Dr Cook commenting that 'these coins have been regarded as extremely rare, and to find as many as 43 in one hoard is unprecedented.' It is probable that the hoard was deposited on a single occasion.

Eleven sherds of pottery were recovered. Two are basal sherds, one bearing the impression of a coin with which it was in contact during burial; nine sherds are from the wall of a pot. The fabric in all cases is a very hard, slightly sandy ware, in which the surfaces are partly oxidised and partly reduced. Patches of a clear glaze are present on some sherds. They may all come from a single vessel but as only two sherds join, it is possible that more than one pot is represented. The basal

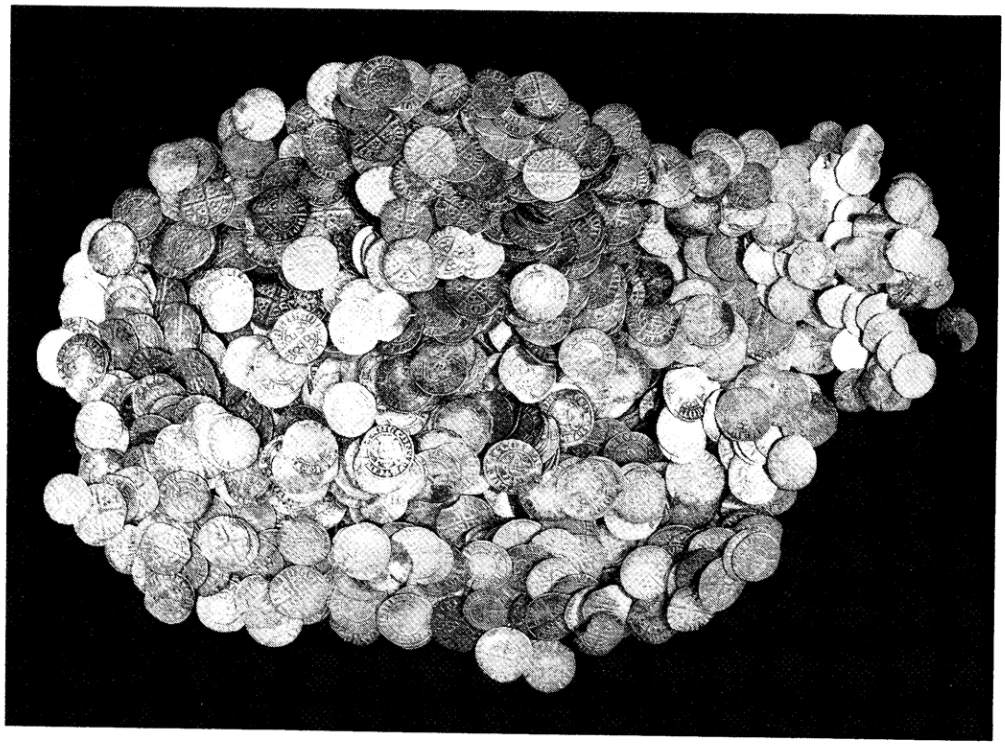

PLATE 1.

sherds are plain and flat, and one sherd from the shoulder of a vessel bears the scars of a small handle.

The vessel in which the coins were buried may have been a jug although the absence of thumbing around the basal angle, and the fact that it is flat, rather than slightly sagging, suggest that it was very coarse. There is insufficient evidence to reconstruct the form. The ware cannot be identified with certainty because it has been very highly fired. The simplest explanation is to regard the sherds simply as part of an overfired northern reduced ware. From the late thirteenth or early fourteenth century, many locally made vessels were reduced sandy fabrics.

It is worth emphasising, however, that the pot may not be a Cumbrian product. It could be from the north-east or from Scotland. It has a superficial resemblance to Midland Purple ware, and the small handle attested by the scar, would not be inconsistent with such an attribution. This is a common element in Midlands assemblages in the fifteenth and sixteenth century. Although occasional examples have been found stratified in fourteenth century deposits, a date in the 1350s suggested for the hoard may be regarded as a little early for Midland Purple as far north as Carlisle.

Following the outbreak of war with Scotland in 1296 the territory around Carlisle was always vulnerable to attack by the Scots. In the 1350s the Scots renewed their threats to northern England. In 1353 and 1355 the northern counties were put on the alert against an expected invasion, and in 1355 the mayor of Carlisle was told to imprison all Scots and others 'spying on the defects of the city walls'[5]. In the same year the government was warned about the 'perilous state of the March, the castle and city of Carlisle'[6]. In fact much of the fighting in 1355–56 took place in Roxboroughshire but the effect of the wars on the inhabitants of Carlisle and neighbouring villages would have been serious. From 1357 a state of uneasy truce existed between England and Scotland although this did not in itself prevent casual raiding across the border.

It is of interest to see the mixture of English and Scottish issues in the hoard, as well as some from Ireland. They serve as a reminder that southern Scotland was a very important part of Carlisle's economic hinterland. Tolls were levied in Carlisle on goods from Ireland and Scotland[7], and despite wars, embargoes on cross-border trade were rarely effective. In this context it is easy to see why a coin hoard near Carlisle should contain such numbers of Scottish and Irish issues, although too much stress should not be placed on this aspect[8]. The political situation was such as to encourage coin hoarding and, using a combination of numismatic and documentary sources, it can be suggested that the coins were concealed in an earthenware container, perhaps in the first half of the decade[9].

Acknowledgements

Since the hoard was found there have been a number of problems associated with its discovery. Colin Richardson wishes to thank the finders for their promptness in reporting the find and for their cooperation through a long and difficult episode. Special thanks are also due to Dr Barrie Cook for his advice and support and to Bruce Jones and Dr J. Burgess for valuable assistance with regard to the historical context of the hoard[10]. J. Taylor provided comments on the pottery.

Notes and References

[1] The precise location of the find and related documents are deposited in a restricted access file in Carlisle Museum.

[2] Before the preparation of this note a number of the coins were sold on the open market. Fortunately, before this occurred Carlisle Museum was able to purchase a selection of 147 coins from the hoard with the aid of a grant from the Victoria and Albert Museum Purchase Fund and the Friends of Tullie House. A detailed list of this acquisition is in the museum archive. The British Museum also acquired a number of coins.

[3] The writers would like to thank Neil Marshall and Ken Jones for permission to use some of their findings which are contained in a detailed report on the site. A copy of this is lodged in the Carlisle Museum archive.

[4] Pending the full publication of the Rickerby hoard the authors wish to thank Dr Cook for allowing access to his official Coroner's report and for permission to use his initial findings from which these comments are taken.

[5] Bain, J. (ed), *Calendar of Documents Relating to Scotland*, (1881–88) (4 vols), III, 1573.

[6] *ibid.* III, 1590.

[7] Cumbria Record Office (Carlisle), Mounsey Heysham MSS, I, ff.49.

[8] Dr Cook comments that 'being of the same weight and fineness as the English issues, these would circulate alongside them quite happily wherever. They may have been more common in the north, but this is difficult to prove as we don't get the hoards in the south to make a proper comparison' (pers. comm. to CR 31 January 1990).

[9] 'The absence of relatively common pennies of pre-Treaty D (1352–3), E (1354–5) and F (1356) suggests a date *c.* 1352' (B.J. Cook).

[10] Following the discovery of the hoard Mr B.C. Jones responded promptly with a detailed survey of the historical and documentary evidence relating to the neighbourhood of the find. A copy of this document dated 24 October 1988 is in the site archive. Unfortunately, because of the sensitive nature of the find, and the possibility that further coins remain to be discovered, it has not been possible to include these findings in this note. It is hoped that future circumstances may permit this work to appear in *Transactions*.

20. *A Westmorland Quaker in Maryland*

By ARTHUR H. DUXBURY

There is a little that can be added to Janet Martin's note about the will of John Pinder of Maryland (*CW*2, xc, 286). As she states there were three Quaker families in Ravenstonedale of the name of Pinder – Anthony, Richard and John. Anthony had a son John, born 12 June 1657 and Richard had a son Joseph, born 9 February 1692. The problem is, which was the John who died in Maryland? Anthony and Richard appear to be the sons of John Pinder who was buried on 14 May 1653. Anthony was baptised on the 8 April 1632 and Richard on the 14 May 1653. In the records of the manorial court there is an entry in 1697 when Anthony transferred land in Parrockmoor to John Murthwaite.[1] There is also a receipt dated 7 November 1699 which states 'Anthony Pinder, Parrockmoor, Ravenstonedale, Yeoman, at the hand of Richard Murthwaite of Rigg End and George Murthwaite of Wath, Yeoman, £5 being the whole rent for 1688 and 1689 for Parrockmoor which belongs to John Pinder, now in Maryland, for £5 the said Anthony Pinder doth acquit Richard Murthwaite and George Murthwaite. Signed Anthony Pinder'.[2] This indicates that the John Pinder who died in Maryland was the son of Anthony as both were of Parrockmoor and Joseph would be his cousin.

With regard to Richard, the quotation from Nicholls is copied from *The First Publishers of Truth*, edited by Norman Penny (1907). He also seems to have gone to America. A. Day Bradley states 'a short period of Quaker activity began in Bermuda when Richard Pinder and George Rose, two of the First Publishers of Truth, arrives on the 24. 2. 1660 . . . Richard Pinder writing to George Fox in August, 1660, said, I have lately been at Bermuda where I left George Rose, great service is done at that place, for before I came away several meetings were established'.[3] Richard must have returned to Ravenstonedale as his children were born between 1664 and 1671. The manorial court records state that in 1668 Richard Pinder transferred the farm of Wath to Robert Fawcett.

Finally there is the first John. His date of baptism cannot be traced. He had four children between 1650 and 1656 and on the marriage of his daughter Sarah she is stated to be of Wath, which is the farm adjoining Parrockmoor. Two of his daughters married but both left the parish.

In 1716 John transferred his farm of Wath to Richard Fawcett. There seems to be nothing to connect him with the Maryland John. With the death of Anthony in 1718 the connection of the Pinders with Ravenstonedale came to an end.

References

[1] C.R.O., Carlisle, Customary Court Baron and Court of Demissions, Lonsdale Estate Papers.
[2] C.R.O., Kendal, Metcalfe-Gibson Papers, Box 3.
[3] A. Day Bradley, 'Friends in Bermuda', *Journal of the Friends Historical Society*, Vol 54, (1976), 3–4.

21. *Three post-medieval green glass wine bottle fragments from Penrith*

By EDGAR BOLTON

Carlisle Archaeological Unit has for many years attempted to monitor the machine-cutting of contractors' trenches in areas of archaeological potential within Carlisle District. In 1986, Ian Caruana and Alan James tracked the spoil from some such trenches to tipping sites at Cocklakes (NY 46 51) approximately 7 kilometres south-east of Carlisle where they recovered much useful material (publication in preparation). Adjacent sites were simultaneously being used for dumping spoil from other locations. So, in October 1986, the wine bottle fragments noted here (Fig. 1) were recovered with other (mid to late 19th century) artefacts from excavations said by the lorry drivers to be in Penrith although the precise location, possibly Bluebell Yard, was never ascertained. The pieces are now in Penrith Museum.

Other post-medieval glass vessel fragments from Penrith, excavated by Tom Clare in 1976 and now under the temporary curation of Carlisle Museum, still await publication as do the finds from excavations at nearby Brougham Hall. Wine bottles from excavations at Clifton Hall, 1977-1979 (Fairclough 1980), are deposited with the Castle Museum, Kendal.

I have selected the three fragments from this chance find for special attention because they allow two important aspects in the development of the wine bottle to be illustrated within the accessible local corpus; and having been highlighted they can be used as reference points as other work progresses.

Neck finish

The neck finish on the first fragment (1) dates to the second half of the 18th century and is probably around the end of the third quarter. It is slightly less evolved than that on the pair of bottles in Penrith Museum sealed E * L 1786 (Bolton 1987; refer to this article and its bibliography for further discussion of wine bottle technology). The cracked-off top of the neck has been reheated then tooled and rolled to form the everted thickened mouth. The string rim is an applied trail tooled roughly into shape. This technique for finishing wine bottle tops had been used with little exception, albeit to produce a variety of styles, for a hundred years.

The second fragment (2) dates to the late 18th/early 19th century and is slightly more evolved than the 1786 pair noted above, though it need not be chronologically later. The style is similar to the tops of two bottles in Kendal Museum sealed JOHN WAKEFIELD 1802 KENDAL and J WHITWELL 1805 KENDAL. The shape of the neck and shoulder also suggest a date of *c.* 1800. This fragment (2) shows clear evidence of the innovatory addition of a second applied trail as a shortcut to labouriously folding the top over. This technique was soon replaced, around the second quarter of the 19th century, by the much faster step of applying a single blob of molten glass to the cracked off top of the neck and shaping this with a template.

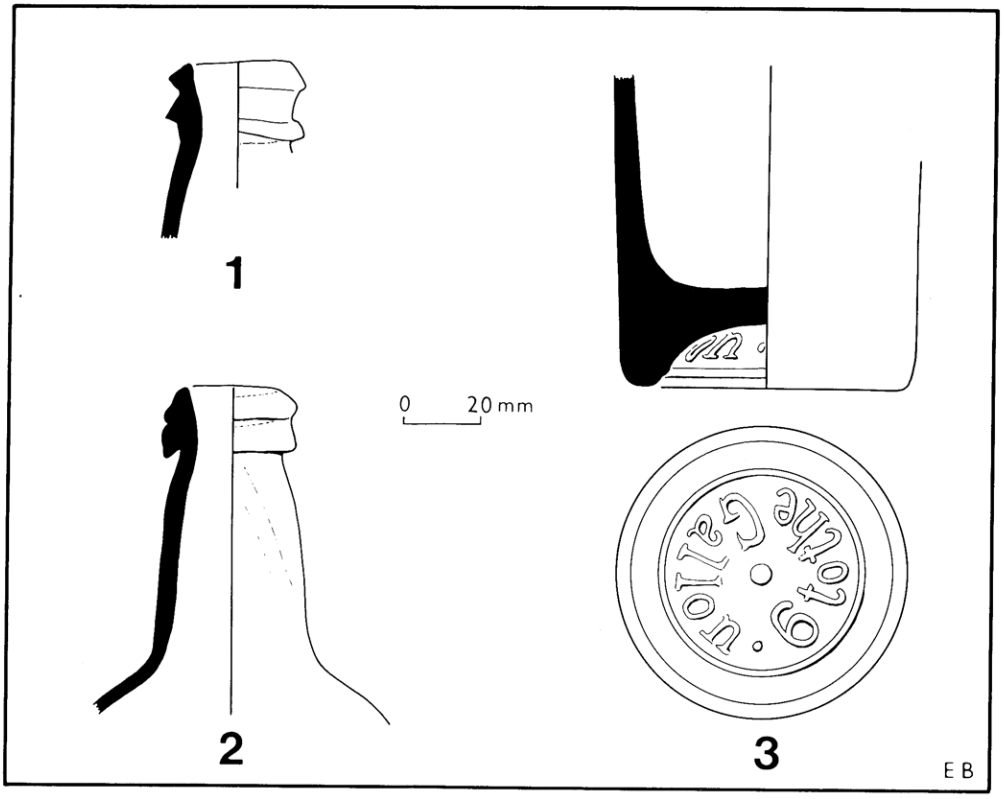

FIG. 1. Post-medieval green glass wine bottle fragments from Penrith, scale 1:2. (1) Top, *c.* 1770, (2) Top, *c.* 1800, (3) Base, *c.* 1850.

Standardisation of sizes

The base fragment (3) is interesting mainly for the embossed inscription ('6 to the Gallon') which is unique amongst all the wine bottles I have seen so far in Cumbria. Without the rest of the bottle it is not possible to calculate the capacity to see which of several 'gallons' is referred to, but the modern Imperial Gallon (4.546 litres) is most likely. It is worth mentioning that Moody (1960) notes the existence, in 1841, of what was then called a 'No. 18' bottle (capacity, 631.4 ml) the size defined as the number of bottles required to make three *old* (i.e. Queen Anne) wine gallons. This could have alternatively been expressed as 'six to the gallon'.

The bottle has been produced in a Ricketts type mould (patented 1822 but used earlier) which consisted of a cylindrical body mould articulating with a symmetrical pair of shoulder parts. This type of mould allowed the first true standarisation of wine bottle sizes. Base plates could be changed to give different inscriptions. The diagnostic features on the artefact, excepting the existence of the inscription itself and the central boss, are the presence of concentric horizontal mould seams (illustrated), the absence of any vertical mould seams on the lower body (they were present only on the shoulder) and the lack of a basal 'bulge' (distortion resulting from manual formation of the kick).

This particular base further shows no evidence of empontilling, suggesting use of a sabot or snap case. These latter devices gradually replaced the pontil rod around 1850. The earliest Ricketts bottles show a faint, wide central scar (and bear the name of the Ricketts Company). A mid-19th

century date is further suggested by the fact that the patent should have given the Ricketts Company 16 years protection, thus imitators (such as here) *should* not have been operating until at least 1838. But there are obvious limitations to such criteria.

References

Bolton (1987) E. Bolton, 'A pair of sealed green glass wine bottles in Penrith Museum', *CW2*, lxxxvii, 275–9.
Fairclough (1980) G. Fairclough, 'Clifton Hall, Cumbria: Excavations 1977–79', *CW2*, lxxx, 45–68.
Moody (1960) B.E. Moody, 'The origin of the 'reputed quart' and other measures' *Glass Technol*, 1, (1960); 55–68.

22. *An eighteenth-century sealed green glass wine bottle in Carlisle Museum*

By EDGAR BOLTON

In my discussion of two glass wine bottles in Penrith Museum (Bolton 1987) I highlighted sealed bottles as a priority for further work: Carlisle Museum has a small, but interesting, group of 18th century wine bottles amongst its social history and archaeology collections. In due course this will be greatly augmented by the accession of material from Carlisle Archaeological Unit's series of excavations. Surprisingly, no wine bottle seals emerged from the first ten years of archaeological work, from 1977–87, and so this single sealed bottle in Carlisle Museum (accession number 5–1910, provenance unknown) remains its most significant.

Description

The bottle (Fig. 1) is complete except for a few chips out of the string-rim. The overall shape, which is dubbed 'mallet' by collectors, cannot be produced by blowing into a one-piece mould (it could not be withdrawn) and is formed by free-blowing then rolling on a marver to flatten the sides.

The basal kick has been formed by pushing an implement into the hot glass. This tool has left a lobed, almost quatrefoil impression (see Fig. 1 detail) which, although not unambiguous, suggests the type of blunt-ended, quartered rod noted by Jones (1971). A very clear impression of such a rod appears on another 18th century wine bottle base in Carlisle Museum (accession number 81–1984, unpublished).

The bottle also bears a fairly large, faint pontil mark (width approximately 61 mm) indicating deliberately reduced adhesion (see Bolton 1987 and references for discussion of empontilling).

The neck is waisted with the mouth slightly everted. The rim is cracked off simply without further elaboration. The string-rim has been formed by tooling an applied trail into a neat V-shape.

The seal has been applied at the top of the body and was apparently stamped, somewhat inaccurately, when the glass was very hot as fine detail of the die is preserved (see Fig. 1, inset) including the engraver's marking out lines. Part of the extruded glass at the top edge of the seal has flowed back over the stamped area.

Discussion

The form of this bottle is closest to Hume's (1961) type 12, dated *c.* 1725–35. The most significant local comparison is with the heterogeneous, broadly contemporary group excavated

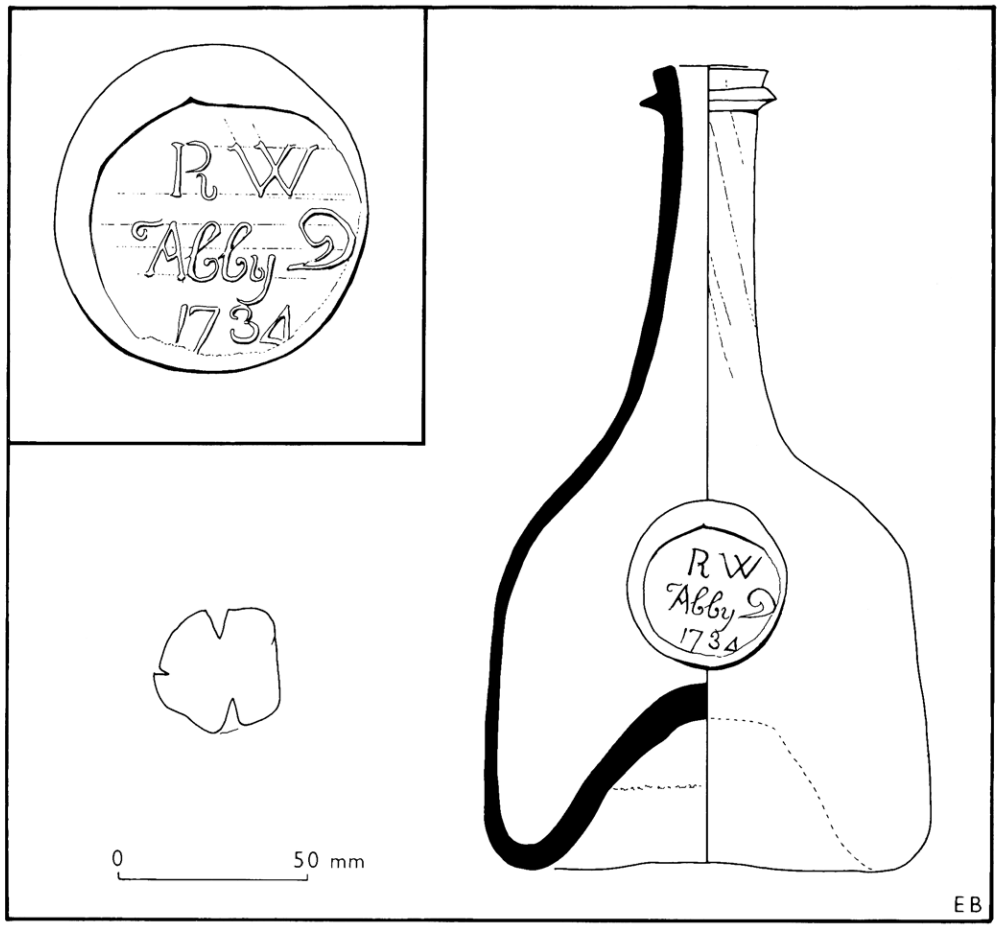

FIG. 1 Sealed green glass wine bottle in Carlisle Museum (scale 1:2) showing also the outline of the tool impression in the base. Inset, detail of seal (life-size).

from Crown and Anchor Lane, Carlisle (unpublished), of which one bottle (CAL A GL17) is a close, but not exact, parallel. Another bottle in Carlisle Museum (accession number 84–1957), found in Scotch Street, Carlisle, around 1850, falls into this transitional period, between globular and cylindrical bottles, but is probably earlier than the sealed bottle featured here. Little (1904 (c)) illustrates another of these bottles, from Troutbeck, the present whereabouts of which are not known.

The form is known elsewhere: Hume (1970) illustrates a smaller bottle of very similar shape, dated 1734, but without further details. The bottle sealed THE REVD/DOCT RUMNEY/ST. ALBANS/1734 (Dumbrill 1983, frontispiece, 154, 303, 333), sold at auction in 1979, provides a close comparison of the same year, while that sealed I/FOGG/1734 (Dumbrill 1983, plate 22, 333), sold in London in 1979, has more pronounced shoulders and is, in evolutionary terms, a little close to the short cylindrical form of the 1740s. Price (1910, 119, nos. 4–5, figs. 2–3) illustrates a similar contrast in bottles sealed JACOB HATT/1727 and M.N./1733 respectively.

The style of neck-finish is typical of English bottles of the second quarter of the 18th century and the V-shape string-rim is a long-lived feature with examples appearing in every decade of the 18th

century. The technological details of the base formation are significant, but are not clear enough to use, unsupported by further examples, as a yardstick by which to judge other bottles.

The seal was published in Ruggles-Brise's (1949, 81, 159 with sketch by Barbara Ashby) corpus but without identification. Decoding is problematical, even if we can be happy that this bottle was produced for a local customer. The middle line, ABBY followed by the plume-shape flourish, could be a surname or could refer to a place (e.g. The Abbey) or even a tavern, although this latter suggestion is unlikely. The possibility that the flourish carries a meaning should not be ruled out. A systematic search of the documentary sources would be an enormous task with no guarantee of success. Suggestions for the identity of 'R.W.' or 'R.W. Abby' are therefore left to others whose studies embrace the 1730s.

References

Bolton (1987) E. Bolton, 'A pair of sealed green glass wine bottles in Penrith Museum', *CW2*, lxxxvii, 275–9.
Dumbrell (1983) R. Dumbrell, 'Understanding antique wine bottles', *Antique Collectors' Club*. (Woodbridge, Suffolk, 1983)
Hume (1961) I. Noel Hume, 'The glass wine bottle in colonial Virginia', *J. Glass Stud.*, 3, (1961), 91–117
Hume (1970) I. Noel Hume, *A guide to artifacts of colonial America*, (A.A. Knopf, New York, 1970).
Little (1904) W. Little, 'The evolution of the bottle, illustrated from a Westmorland dust-bin', *CW2*, iv, 213–5.
Jones (1971) O. Jones, 'Glass bottle push-ups and pontil marks', *Historical Archaeol.* 5 (1971); 62–73.
Price (1910) R. Price, 'Notes on the evolution of the wine bottle', *Trans Glasgow Archaeol Soc*, new series, 6 (1910); 116–24.
Ruggles-Brise (1949) S. Ruggles-Brise, 'Sealed bottles', *Country Life*, (London, 1949).

23. *A fragmentary Nailsea type glass vessel in Carlisle Museum*

By EDGAR BOLTON

Stored with the wine bottles in the social history collection in Carlisle Museum is a handful of fragments of similar green glass from a quite different type of vessel. They have recently been given an accession number (82–1984/1) but have been in the Museum for much longer and their history is presently obscure. With careful examination it is possible to go some way towards understanding what this vessel was and appreciating its significance.

The glass is similar to green bottle glass but has a much more bubbly metal. Its outer surface is decorated with 'splashes' of opaque white glass. Where this is very thin it gives rise to a bluish colour by interaction with the iron in the underlying green glass. In the thicker white areas are individual flecks standing proud of the surface, suggesting the decoration may have been applied in granular form. This type of decoration is often incorrectly described as an 'enamel' but the spiral elongation at the top of the vessel shows it was applied while the glass was hot and still being worked, probably at the paraison stage, rather than cold painted to the finished vessel and reheated.

Vessels decorated in this manner are part of a diverse range of glass artefacts popularly referred to as 'Nailsea ware' (Gray 1911; 1920; 1923; Vincent 1975), after the glassworks set up by J.R. Lucas near Bristol in 1788. These objects can be divided into two general categories: The 'fancy glass' (Jacob's ladders, model ships, toy pens, pins, hats, pipes, birds, walking sticks, lamps, knitting needles, bugles, bells, drumsticks, yards of ale, gimmel flasks, coach horns, cucumber trainers, and other sophisticated and often bizarre items, which are not generally produced in

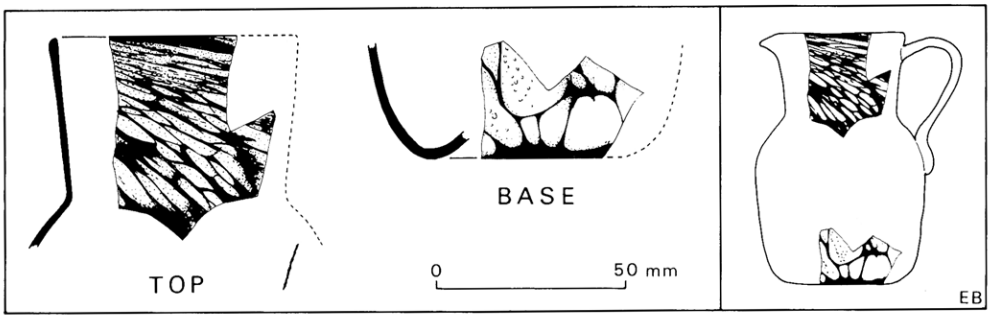

FIG. 1 Nailsea type glass vessel. The separate top and base fragments (scale 1:2) and a tentative reconstruction (scale 1:4).

common bottle metal) and the more simple 'domestic' objects (bottles, flasks, jugs, mugs, bowls and the occasional rolling pin, probably all by-products of bottle houses), such as we have here.

There are 13 fragments, but several join leaving eight separate pieces. The drawing (Fig. 1) shows the top and bottom of the vessel based on three and two pieces respectively. There is only about 17% of the perimeter surviving at both top and bottom, so the estimation of diameters may be slightly inaccurate. There is no evidence for a spout or handle, but the shape of the top strongly suggests a jug (In fact I can only find one example (Vincent 1975, pl. 24) of such a vessel with a funnel mouth which is not a jug). The fact that the base-ring is abraded excludes the possibility of a foot (such as in Vincent 1975, pl. 38, pl. 62) or similar complication. There is no intrinsic evidence for the vertical distance between the top and the base so the reconstruction drawing (supported by Vincent 1975, pl. 101) is one of several theoretical possibilities. As no straight-sided body sherds are present, a simpler reconstruction is a vessel with a much shorter, more globular body (such as Vincent 1975, pl. 25), and the only argument against this is that such forms *seem* rather less common.

There is no doubt that the production of 'Nailsea ware' was not restricted to Nailsea or even the Bristol area. It is possible that certain types of applied decoration may be indicative of particular production sites (e.g. opaque yellow rather than white glass, applied chips or trails) but I have not seen enough information about vessels which are *definitely not* from the south west to be able to form an opinion on this.

There is another 'Nailsea' vessel in Carlisle Museum, a flask from Papcastle (accession number 14–1899.3) submitted, no doubt, on the assumption it was Roman. There are also small fragments of related vessels from excavations at Penrith (1976 unpublished) and the Lanes, Carlisle (1975 unpublished). The date of 'Nailsea' vessels is generally assigned to the period *c.*1790– *c.*1830 but there is no good reason why some should not have been produced earlier in the 18th century, before the Nailsea works was set up. At the other end of the date range, there would be no 'tax incentives' to produce these items from common bottle glass after the abolition of the duty on glass in 1845, but that is to make assumptions about why these vessels were produced. A few sealed vessels are known (Dumbrill 1983, figs. 221–3) of which the latest is dated 1834.

References

Dumbrill (1983) R. Dumbrill, 'Understanding antique wine bottles', *Antique Collectors' Club*, (Woodbridge, Suffolk, 1983)

Gray (1911) H. St. G. Gray, 'Nailsea glass', *The Connoisseur*, 30 (June 1911), 85–98.

Gray (1920) H. St. G. Gray, 'Nailsea and other glass in the collection of Mr John Lane', *The Connoisseur* 57 (June 1920); 67–74.

Gray (1923) H. St. G. Gray, 'Notes on the Nailsea glassworks', *The Connoisseur*, 65 (March 1923); 127–33.

Vincent (1975) K. Vincent, *Nailsea glass* (David and Charles, London, 1975).