The spire of Holy Trinity Church, Bosham, West Sussex

by F. G. Aldsworth

with contributions by
K. Morrison
D. H. Miles
M. J. Worthington

The spire of Holy Trinity Church, Bosham, was the subject of study in 1998 whilst the structure was undergoing routine repair and maintenance. It can be demonstrated that, whilst the mast and cross-trees were replaced in 1841 and some other alterations have been made, much of the surviving structure, including most of the rafters, was built in a single phase of construction from timbers felled in the winter of 1405/06 and the summer of 1406. The Romanesque corbel-table at the top of the tower, which supports the spire, is discussed in greater detail than previously but it continues to be ascribed on comparative and stylistic grounds to the period c. *1080–1110.*

INTRODUCTION

A watching brief undertaken by the writer in 1988 concluded that the Anglo-Saxon tower of this important, former Minster, church survives intact from plinth level to corbelled eaves-course though it has been altered and repaired on several occasions (Aldsworth 1990).

Soon after the Conquest the tower was heightened by the addition of a new belfry stage which included at least two windows and a finely carved corbelled eaves-course which has been ascribed on comparative grounds to the period *c.* 1080–1110. Later additions include the partial rebuilding of the south-west quoin as a repair at an as yet unknown date, the insertion of three new windows in the belfry, and the erection of the present spire. On architectural grounds, it has been suggested that the windows may have been inserted and the spire built as part of a programme of refurbishment in the late medieval period and probably in the 15th century (Aldsworth 1990, 69). The writer was invited by the Bosham Parochial Church Council to prepare record drawings of the spire and to ascertain a felling date for the timbers used in its construction.

The spire is known to have been in its present form at least since the early 19th century and it is shown as such on a painting of the church in 1824 by J. Rouse, a sketch in 1845 by R. H. C. Ulsdell, and a painting in 1851 by George de Paris, all of which are displayed in the bell-ringers' chamber of the church.

The tower is discussed briefly, then the fine corbels which form the early Norman eaves-course, and which are ascribed to the period *c.* 1080–1110, are considered in greater depth before considering the form of the spire and its date of construction.

THE TOWER

As previously discussed (Aldsworth 1990, 56–63), the pre-Conquest tower survives in its original form, built on an offset plinth-course, with three storeys separated externally by string-courses (Fig. 1). The tower was capped by a corbelled eaves-course, set in the same distinctive hard pink mortar as the original quoins, which was subsequently cut back to the outer face of the walls, but it was still visible in 1988 and was exposed to view by the repairs undertaken at that time (Aldsworth 1990, figs 3 & 4 and here (Figs 2a & 2b). The structure includes the remains of original belfry windows in the north, south and west sides and a series of openings into the nave in the east side, which indicate that the nave contained at least one, and possibly two, upper floor levels or galleries.

Internally the pre-Conquest tower now contains the remains of one old floor, just below the level of the second string-course and at the threshold level of a round-headed door in the east wall (Fig. 1). This door presumably served a second floor or a gallery level in the nave. The floor is carried by a pair of east–west beams, with braces partly set into the walls and partly supported on Purbeck stone corbels. The floor frame comprises the remains of ten substantial floor joists some of which are later replacements of originals and one is a re-used beam with redundant

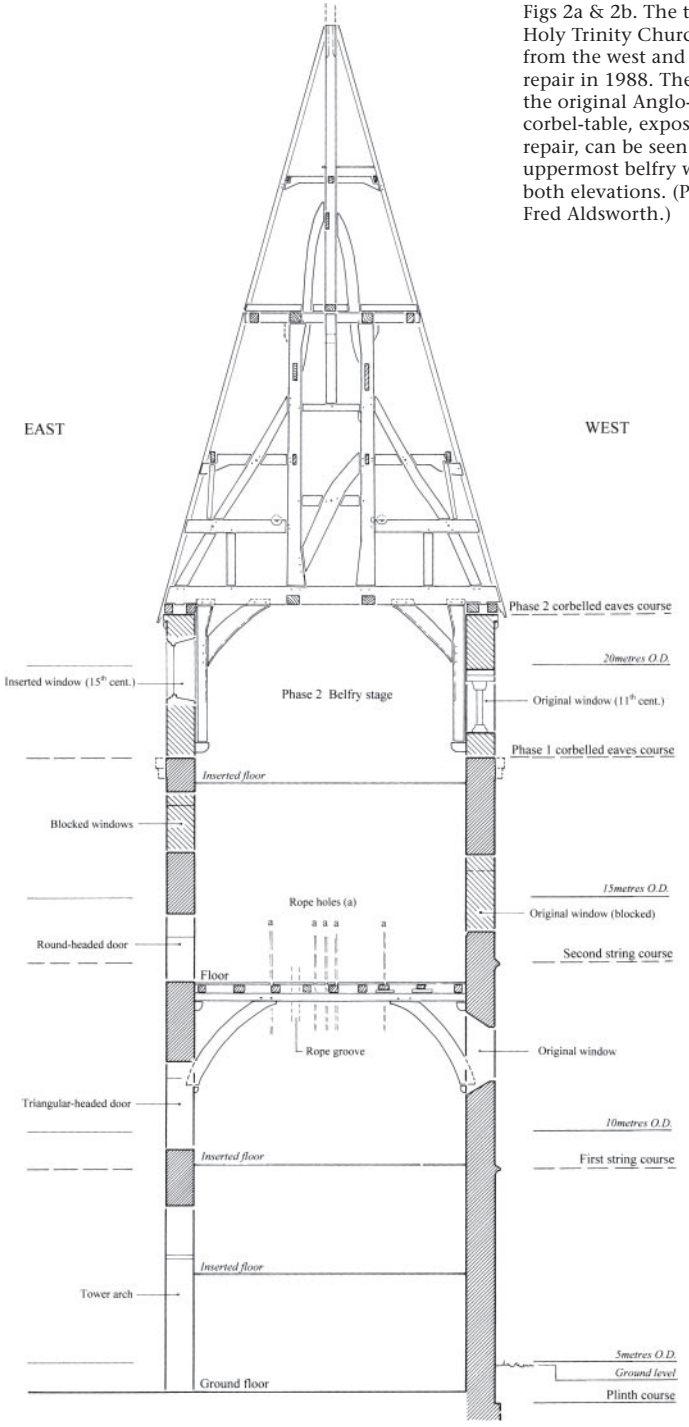

Figs 2a & 2b. The tower of Holy Trinity Church, Bosham, from the west and north after repair in 1988. The remains of the original Anglo-Saxon corbel-table, exposed during repair, can be seen below the uppermost belfry window in both elevations. (Photographs: Fred Aldsworth.)

a

b

Fig. 1. Vertical section through the tower and spire, looking south.

pegged mortices in the underside. The frame supports eighteen wide floor boards; the four on the north side appear to be later replacements, but the remainder may be contemporary with the frame. The whole assembly is pierced by a series of vertical holes to carry bell-ropes and the two main beams each have a vertical groove, about 0.20 m wide, facing each other on their inner faces. The groove on the beam on the south side, may have been caused by wear from the windlass ropes. No visual evidence is available to date this structure and it has not been dated by dendrochronology, but it is presumably of late medieval origin.

There are two modern floors below this level; the upper timber floor is at the level of the first string-course and presumably replaces an original one served by the triangular-headed door in the east wall. The door presumably served a first floor or a gallery level in the nave. This is now the floor from which the bells are rung and the space is lit by three small windows, with large internal splays. The lowest floor is a recent insertion on steel girders at a level which was not used originally.

The present belfry floor, which is at the level of the original Phase 1 pre-Conquest corbelled eaves-course, is a modern one of two north–south steel girders supporting three east–west girders and on this are a boarded floor and the bell-frame. The bell-frame, which carries six bells, was built in 1979 and the floor dates to this time. There is no evidence to indicate the form of the top of the pre-Conquest tower above the corbelled eaves-course.

The early Norman addition, probably of *c.* 1080–1110, has already been described in some detail (Aldsworth 1990, 63–9).

THE ROMANESQUE CORBELS

The corbels were not illustrated in 1990, and so the opportunity is taken here to include a photograph and description of each one as important pieces of Romanesque sculpture, one at each of the north-west and north-east corners (Fig. 3: NW & NE & Fig. 5), 10 on the east elevation (Fig. 3: E1–E10 & Fig. 5), 13 on the north elevation (Fig. 3: N1–N13 & Figs 4, 6 & 7) and 10 on the west elevation (Fig. 3: W1–W10 & Fig. 7); that is a total of 35 in all. It is these corbels and the tops of the early Norman walls that support the spire.

The corbels are set in a distinctive grey lime mortar, which is not the same as the coarser, buff-coloured mortar used in the rubble flint wall immediately below it. This indicates either that the corbels have been re-set at some time prior to the erection of the present spire, or that different mortars were used for different building materials in the original construction, as is often the case. The absence of corbels on the south elevation and at the south-west and south-east corners is considered to be due to the effects of the prevailing wind and repairs carried out as a result of weathering. No evidence was observed to suggest the form of the original timber spire on top of the walls.

The decoration on the corbels is either in the form of geometric three-dimensional shapes or naturalistic heads of animals and human faces or masks, but the same shape or head is seldom used more than once. Most of the corbels appear to be made from Quarr stone, from the Isle of Wight. At least two different parts of the bed appear to have been used, some of the corbels being executed from finer Quarr than others, although this does not seem to have affected the extent of preservation of the detail depicted on them. Quarr is known to be a stone which can be carved to form fine detail when it is freshly quarried, but it tends to deteriorate rapidly when exposed to the elements. In this particular case the overhanging eave of the spire seems to have given some protection and several of the corbels are relatively well preserved. Two of them (E5 & E6) are more yellow in colour than the others and may be either of fine Quarr or of Bembridge limestone which is part of the same geological sequence.

DISCUSSION OF THE ROMANESQUE CORBEL-TABLE
by Kathryn Morrison

The Bosham corbel-table closely resembles those used throughout the construction of nearby Chichester Cathedral, and a comparison of the two works suggests that the Bosham corbel-table, which may have been reset, has close associations with Chichester. The formal similarities between the two works are undeniable. Both are of shelly Quarr limestone from the Isle of Wight, and in each case the corbels carry a band of arches which supports the wall-plate. At Chichester the arches sit perfectly on top of the corbels, and are carefully spaced by intermediary ashlar blocks where necessary, while at Bosham the arches overlap the edges of the corbels

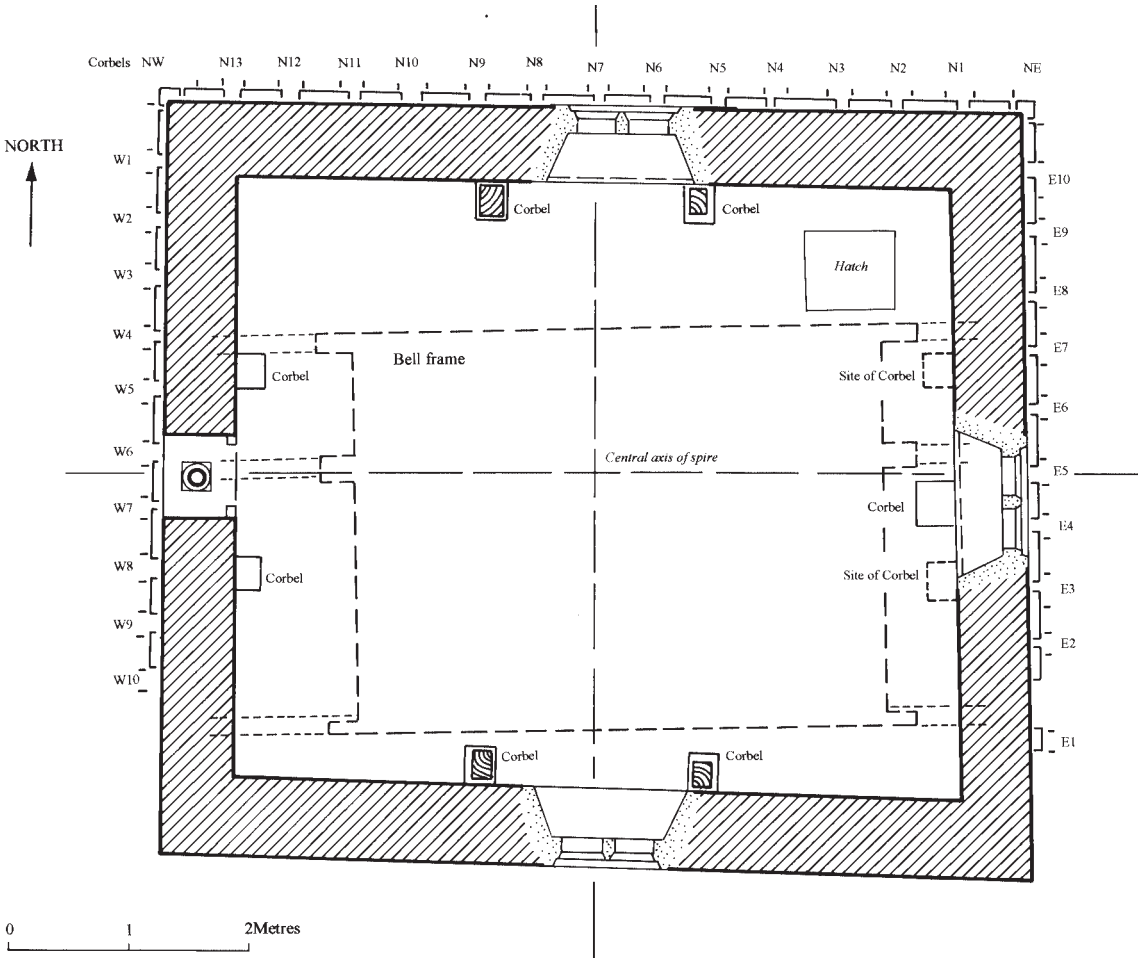

Fig. 3. Plan at Phase 2 belfry stage. The original (Phase 2) masonry is shown hatched diagonally, whilst later insertions are shown stippled.

Fig. 4. Holy Trinity Church, Bosham, Romanesque corbels on the north elevation of the tower, photographed in 1988 after cleaning. (Photograph: Fred Aldsworth.)

and are distanced by exposed rubble infill. This unhappy arrangement, together with the evidence of the mortar differences, suggests that the corbel-table may have been reassembled. It does not, however, entirely remove the possibility that the corbel-table represents an addition to the Norman belfry.

The similarities between the Bosham and Chichester corbels extend beyond the choice of

NW

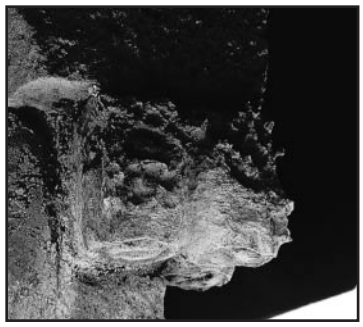

NE

E1

E2

E3

E4

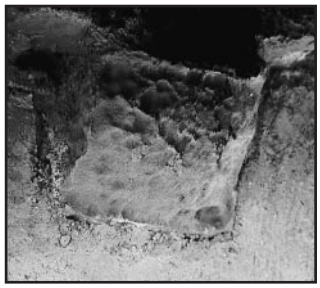

E5

E6

E7

E8

E9

E10

Fig. 5. Holy Trinity Church, Bosham, Romanesque corbels at the north-west corner, north-east corner, and east elevation of the tower. (Photographs: Fred Aldsworth.)

N1

N2

N3

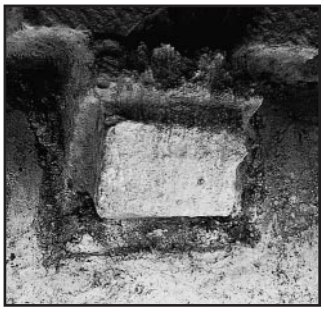

N4

N5

N6

N7

N8

N9

N10

N11

N12

Fig. 6. Holy Trinity Church, Bosham, Romanesque corbels on the north elevation of the tower. (Photographs: Fred Aldsworth.)

N13

W1

W2

W3

W4

W5

W6

W7

W8

W9

W10

Fig. 7. Holy Trinity Church, Bosham, Romanesque corbels on the north and west elevations of the tower. (Photographs: Fred Aldsworth.)

Table 1. Bosham corbels.

Corbel no.	Subject matter	Stone[1]	Condition
E1	Frontal animal head with muzzle	Q	good
E2	Roll in hollow	FQ	worn
E3	–	Q	damaged
E4	Raised square in hollow	FQ	good
E5	Quadrant	FQ or B	worn
E6	Quadrant	FQ or B	good
E7	Frontal head	FQ	worn
E8	Frontal head	FQ	worn
E9	Frontal human head	Q	worn
E10	Two human heads, facing angles	FQ	good
NE	Three animal heads, one on each angle of the block. These are identified as animal heads because the lower part of each face is shaped like a muzzle rather than a jaw. The underside of each muzzle is carved with a disc containing a bar or cross.	FQ	worn
N1	Frontal human head	FQ	good
N2	Frontal animal head with short muzzle and large mouth	FQ	good
N3	Frontal human head	Q	worn
N4	Raised square in hollow	Q	good
N5	Frontal human head, possibly with moustaches	Q	worn
N6	Frontal animal head (horse?) with muzzle and possibly bridle	Q	worn
N7	Quadrant divided by central, vertical channel (cf. two wheels)	Q	good
N8	Frontal human head	Q	good
N9	Roll in hollow, with flat band around centre	Q	good
N10	Two human heads, facing angles	Q	worn
N11	Triple roll	Q	good
N12	Two human heads, facing angles	Q	good
N13	Roll in hollow	Q	good
NW	Three human heads, one on each angle of the block	Q	good
W1	Raised square in hollow	Q	good
W2	Raised square in hollow	Q	good
W3	Roll in hollow	Q	good
W4	Raised square in hollow	Q	good
W5	Frontal (animal?) head	Q	worn
W6	Raised square in hollow	Q	good
W7	Raised square or roll in hollow	FQ	good
W8	Frontal animal head with muzzle	FQ	worn
W9	Frontal animal head (horse?) with muzzle and bridle	FQ	worn
W10	Raised square in hollow with sphere or pellet in centre	FQ	worn

[1] FQ = Fine Quarr; Q = Quarr; B = Bembridge

Quarr stone and an arcuated design, and are perhaps most apparent in the repertoire of motifs. In each case, relief carvings project from a concave ground, and are surmounted by a squared abacus. At Bosham, the surviving 35 corbels are all carved with either a geometric design or a head (Table 1). Approximately 156 corbels survive at Chichester, along the sides of the choir and nave aisles, and while these include a greater variety of motifs, geometric designs and heads predominate.

A close comparison of the two ensembles is complicated by the condition of the Bosham corbels, which have been exposed to the elements and are frequently difficult to identify. Most of the Chichester corbels, in contrast, were protected by the roofs of chapels added to the aisles in the 13th century, and are in a relatively good condition. In the following discussion the numbering of the Chichester corbels indicates their location according to bay numbers (e.g. S5 is south aisle Bay 5), from east to west. They will be described in greater detail in the forthcoming *Corpus of Romanesque Sculpture in Britain and Ireland* (*CRSBI*), which is a British Academy-funded project currently housed at the Courtauld Institute of Art.

One of the simplest geometric motifs used at Bosham is the raised square, a motif which occurs several times throughout the Chichester nave (e.g. S5-7; S6-5). At Chichester the square is usually incised with a pattern of saltire crosses: if the Bosham corbels were originally ornamented in this way, no traces remain. The plain cylindrical roll also appears at both Bosham and Chichester (e.g. nave S6-6; S7-7), but decorated rolls appear only at Chichester. One roll at Bosham is clasped by a flat band, and although several examples of this can be seen in the Chichester nave, no two versions there are exactly alike (compare N4-3 and N4-6), and none is identical to the Bosham example. Similarly, the 'double wheel' corbel occurs several times at Chichester (e.g. nave S6-9 and N5-2), but each one is slightly different, and none is exactly like Bosham. The corbel carved with a triple roll at Bosham, on the other hand, is virtually identical to one in Chichester (nave S4-1). But the closest parallel for Bosham W10, a sphere or pellet in a hollow, is a sphere on a roll (nave S4-9). Lastly, the two corbels carved with quadrants at Bosham have no equivalent at Chichester, and do not seem to be part of the original Bosham ensemble. They have thinner abaci than the other corbels and appear to be carved from a slightly different, yellowish stone, identified by Fred Aldsworth as 'Fine Quarr or Bembridge

limestone'. They may have been inserted as replacements if the corbel-table was reset.

In the absence of ears or horns, it is the treatment of the lower part of the face which reveals whether the very simple heads on the Bosham corbels are human or animal. As at Chichester, the animal heads have muzzles with mouths cut into their undersides, while the human heads have small mouths above curved jaws. The animal heads cannot be identified as particular species, but two seem to wear bridles and may be horses (cf. Chichester nave N4-2). Those with simple almond-shaped eyes, muzzles and open mouths, find close parallels at Chichester (e.g. choir N1-1), but the better-preserved Chichester heads often have ears, and their open mouths display rows of pointed teeth and tongues (e.g. nave S6-1). The Chichester choir heads are more elaborate than those of the nave, and include features such as curling horns, flaring nostrils, long ears and paws raised to cover either eyes or ears; one even carries a small human figure in its jaws.

No corner corbels survive at Chichester, and so there are no equivalents for the triple animal and human heads found at Bosham. Several corbels are carved with twinned heads but — as was the case with many of the geometric motifs — none exactly duplicates the Bosham examples. At Bosham each half of the corbel is carved with a simple head, its profile aligned with the upright edge of the face of the block. Some of the Chichester heads are carved in this manner, but these are often paired with a different motif on the other half of the corbel (e.g. nave S4-5; choir N2-8), or are separated from their twin by a geometric design (e.g. nave N6-7). The majority of the twinned heads at Chichester (e.g. nave S7-6; S5-10) have profiles aligned with sloping edges, indicating that these corbels were blocked out differently from those at Bosham, probably to create the impression that the heads looked down on the spectator. Frontal human heads which occupy an entire corbel occur both at Bosham and Chichester: one head at Bosham appears to wear moustaches, as do several at Chichester (e.g. nave S4-7). The human heads in the Chichester choir are, like the animal heads, more complex than those of the nave: several have stick-like bodies, carved on the side or underside of the corbel, one lifts two hands to his face, and another blows a horn.

This brief comparison of the motifs on the Bosham and Chichester corbels is enough to demonstrate that the Bosham corbels are more closely related to the Chichester nave than to the choir. The choir corbels, like the choir capitals, are more elaborate in their design and more skilful in their execution than those of the nave. The Chichester choir corbels appear to be related to those at Winchester Cathedral (e.g. south transept), which are also arcuated. The nave corbels seem to have been entrusted to different sculptors, who followed the same design of corbel-table but modified the repertoire of motifs to suit their own abilities, rejecting more complicated designs in favour of simpler forms. The nave corbels do not seem to have been the product of a coherent workshop, and yet the sculptors probably counted amongst their number the man or men who were also responsible for carving the Bosham corbels.

An alternative possibility, that the Bosham corbels may have been transported from Chichester at some time, must be considered. The corbels of the main vessels of Chichester cathedral were probably removed in the thirteenth century, when these spaces were vaulted, and we have no evidence of their fate. Precise measurements are unlikely to help; although the Bosham corbels appear to be of fairly regular dimensions, the Chichester corbels vary enormously in terms of both height and width. The Bosham corbel-table is simpler than those of the Chichester nave: the arches are not circumscribed by rolls, and the same motifs recur with greater frequency and less variation. This can be interpreted in a variety of ways, and does not help to settle the question of the relative chronology of Bosham and Chichester — although there is always a temptation to assume that the great cathedral presented a model for the surrounding area.

Without information about the organization of the Chichester Cathedral workshop(s), we can date the Chichester corbels only within the broadest parameters. While the building could have been started *c.* 1075, the presence of a doorway with chevron of *c.* 1125 in the south-west tower suggests that construction may have continued to *c.* 1130. Bosham houses a group of loose voussoirs carved with chevrons which is closely related to the south doorway of the south-west tower at Chichester. This indicates repeated contact between the two buildings, despite the fact that Bosham was owned by the Bishop of Exeter, not Chichester. The nave aisles at Chichester would have been built long before 1130, probably *c.* 1110, but their corbels could

have been prepared well in advance of construction. As they are unlikely to have been carved before the more skilled choir workshop left the site, they can be tentatively dated *c.* 1080–1110. This tallies with the late 11th-century date which can be assigned to the Norman belfry of Bosham on the evidence of its double bell-opening, offering reassurance that the corbel-table is, indeed, a primary feature of the belfry stage. Chamfered block capitals, very similar to the Bosham example, appear on the well-articulated chancel arch of St Mary's, Stoughton, situated north-west of Chichester and north of Bosham. They are accompanied by capitals with crook-like volutes and can probable be dated to the late 11th century.

THE SPIRE
by Fred Aldsworth

The framing of the spire is quite complex, with few repairs, additions or alterations, and for this reason it has been decided to illustrate the structure fairly extensively, keeping the written description to a minimum. The original timbers all appear to be oak.

The illustrations used in this part of the article are based on a series of record drawings produced at a scale of 1:20 in April 1998 by the writer for the Bosham Parochial Church Council. At that time access to the interior of the structure was limited to a single vertical ladder up one side of the main frame and some partially boarded working levels. For this reason it was not possible to inspect all of the structure and in particular the precise form of some of the joints. Interpretations of these therefore remain to some extent speculative. A large number of iron brackets have been added to the frame, possibly in the sixteenth century, in order to strengthen the joints and 'more recently' several steel plates have been added to the main beams in order to provide additional support. These have been omitted from the drawings for clarity. The points where timbers were sampled for dendrochronological dating are arrowed and captioned by the prefix BOS. The carpenters' marks are shown in their actual positions and as enlargements.

The height of the tower from the top of the offset plinth-course (at 4.13 m Ordnance Datum) to the top of the corbelled eaves-course (at 21.30 m OD) is 17.17 m. The plan of the tower at wall-plate level is not quite rectangular. Externally the walls measure 6.98 m north, 7.20 m south, 6.30 m east and 6.18 m west, and internally 5.82 m north, 5.98 m south, 4.93 m east, and 4.80 m west (Fig. 3). The walls are approximately 0.60 m thick.

The west wall contains a centrally-placed and original belfry window, comprising a double round-headed opening with mid-wall shaft. The other three walls each contain a centrally-placed and inserted two-light, trefoil-headed window which is probably of 15th-century date. There is a pair of inserted corbels in each of the north and south walls, possibly of Purbeck limestone, which are still used to support the spire and a pair of inserted, but now abandoned, corbels in the west wall. In the east wall there is a centrally-placed corbel which appears to have served no particular function, but on either side of it is a repair indicating the former existence of a fourth pair of corbels, all four pairs having been inserted to support the spire when it was constructed (Fig. 3).

There is a pair of wall-plates on the top of each of the four walls; these are mostly original but six sections have been replaced due to decay, which has been particularly prevalent at the south-west corner (Fig. 8). The outer wall-plates carry the birdsmouth seatings for the rafters. Generally the wall-plates sit flush with the internal face of the wall and flush with the outer face of the corbel-table, except where the latter is missing (Fig. 9). There is evidence, in the form of a mortar change at the very top of the wall internally, to indicate that the wall was repaired to take the wall-plates. The individual wall-plates vary in width, from 180 mm to 280 mm (7 to 11 in.), and in height, from 160 mm to 190 mm (6 to 8 in.). They are joined by pegged mortice-and-tenon joints, with linking pieces at the centre of the north, east and west, but not the south, sides and the whole assembly is in the form of a horizontal frame.

Eight internal corbels originally supported eight chamfered posts with braces up to the soffits of the main beams (Fig. 10). The posts and braces on the east and west sides are now missing (Figs 11 & 12) but those on the north and south sides survive, and in all four cases the posts have been repaired at their lower ends with re-used timbers, each bearing a variety of redundant pegged mortices (Figs 13 & 14).

Seated on the wall-plates, posts and braces are six beams, forming a base frame. Two main beams extend east–west over the entire width of the tower and four secondary beams extend from the wall-plates north and south to the main beams and are secured to them by means of tenon joints (Figs 10 & 11). The two main beams are 390 mm (15.5 in.) deep and 290 mm (11.5 in.) wide, and the secondary beams are 200

mm (8 in.) deep and 290 mm (11.5 in.) wide. In all six cases they are secured to the tops of both the inner and the outer wall-plates by means of a full-width lap dovetail joint with entrant shoulders (Figs 8 & 9).

Lying or running across each of the four corners formed by the inner wall-plates is a relatively modern corner brace which also supports the base of the rafters forming the octagonal shape of the spire and the ends of the north bell-frame and south frame. These probably replaced the original timbers in the same position. The originals were probably trenched into the upper face of the inner wall-plates, but the evidence for this has been either destroyed by later repairs or is now obscured by the replacement corner braces (Figs 8 & 9).

The main frame of the spire is carried on the main and secondary beams and comprises a rectangular

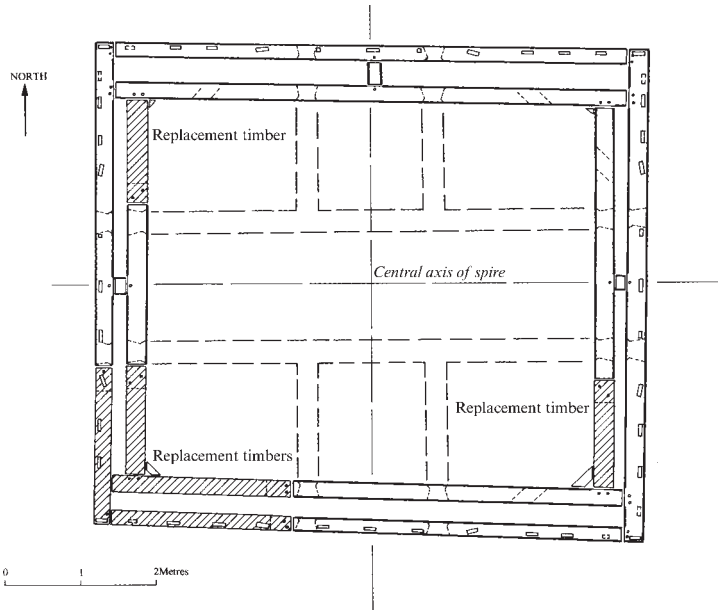

Fig. 8. Plan showing the wall-plates & ties. Replacement sections of original timbers are shown hatched diagonally.

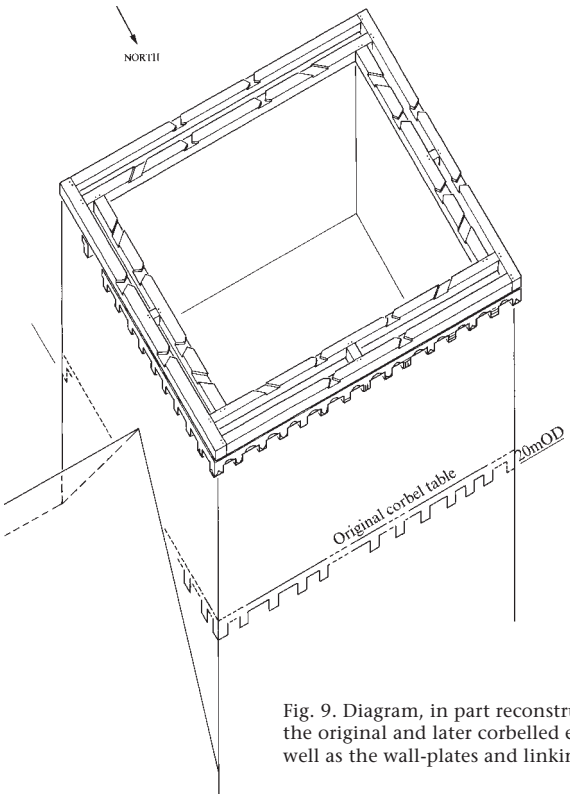

Fig. 9. Diagram, in part reconstruction, showing the original and later corbelled eaves-courses as well as the wall-plates and linking pieces.

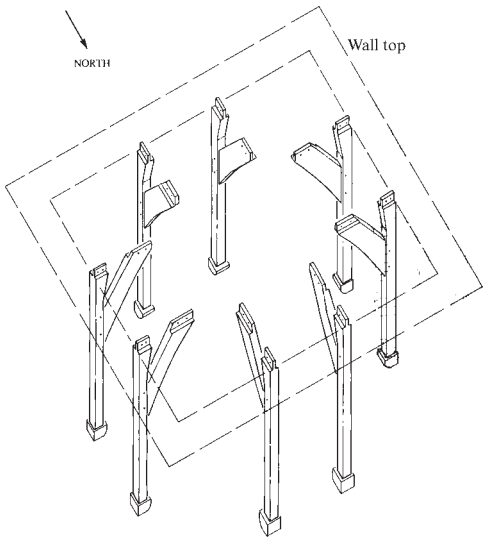

Fig. 10. Diagram, in part reconstruction, showing the posts and braces which support the underside of the main beams.

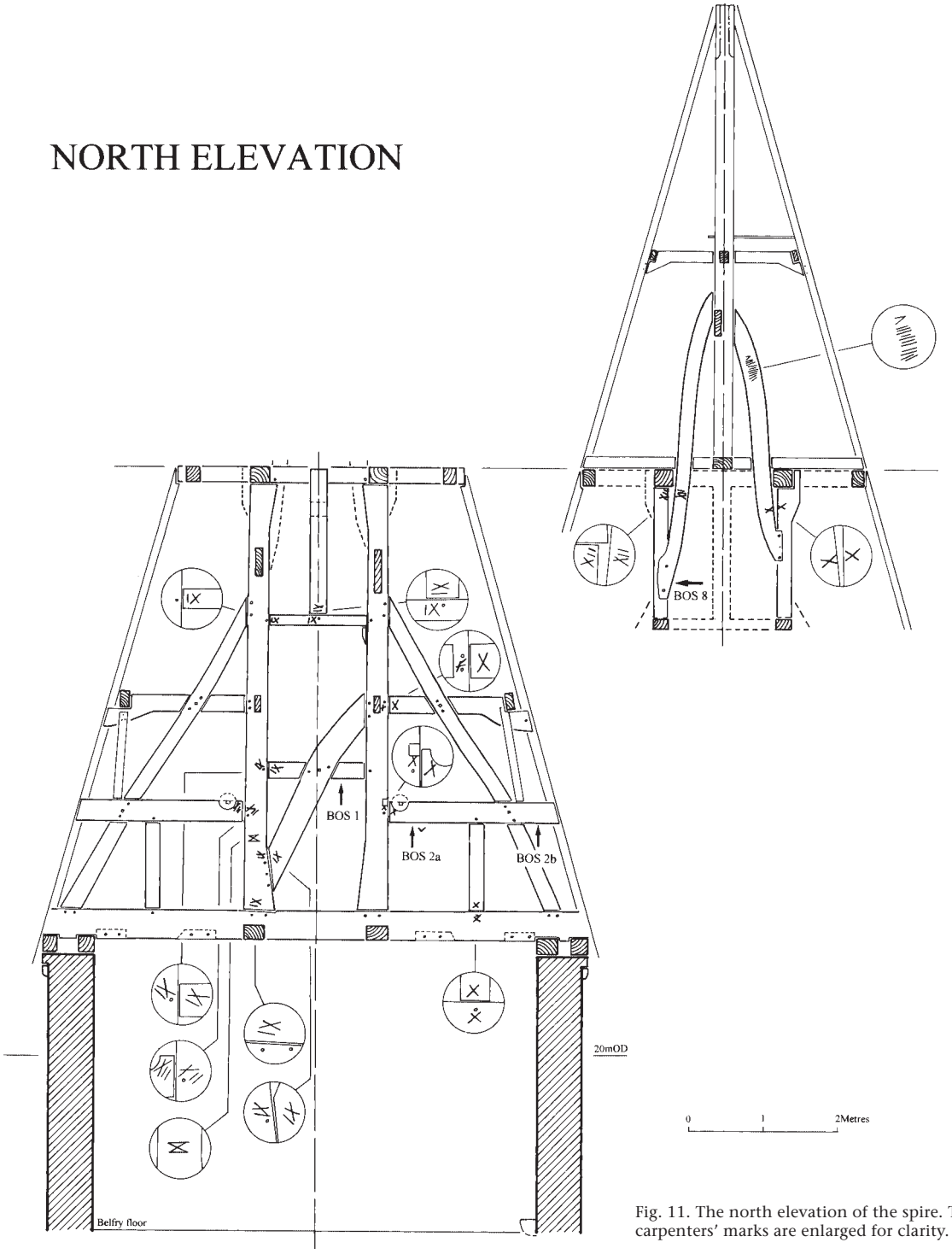

Fig. 11. The north elevation of the spire. The carpenters' marks are enlarged for clarity.

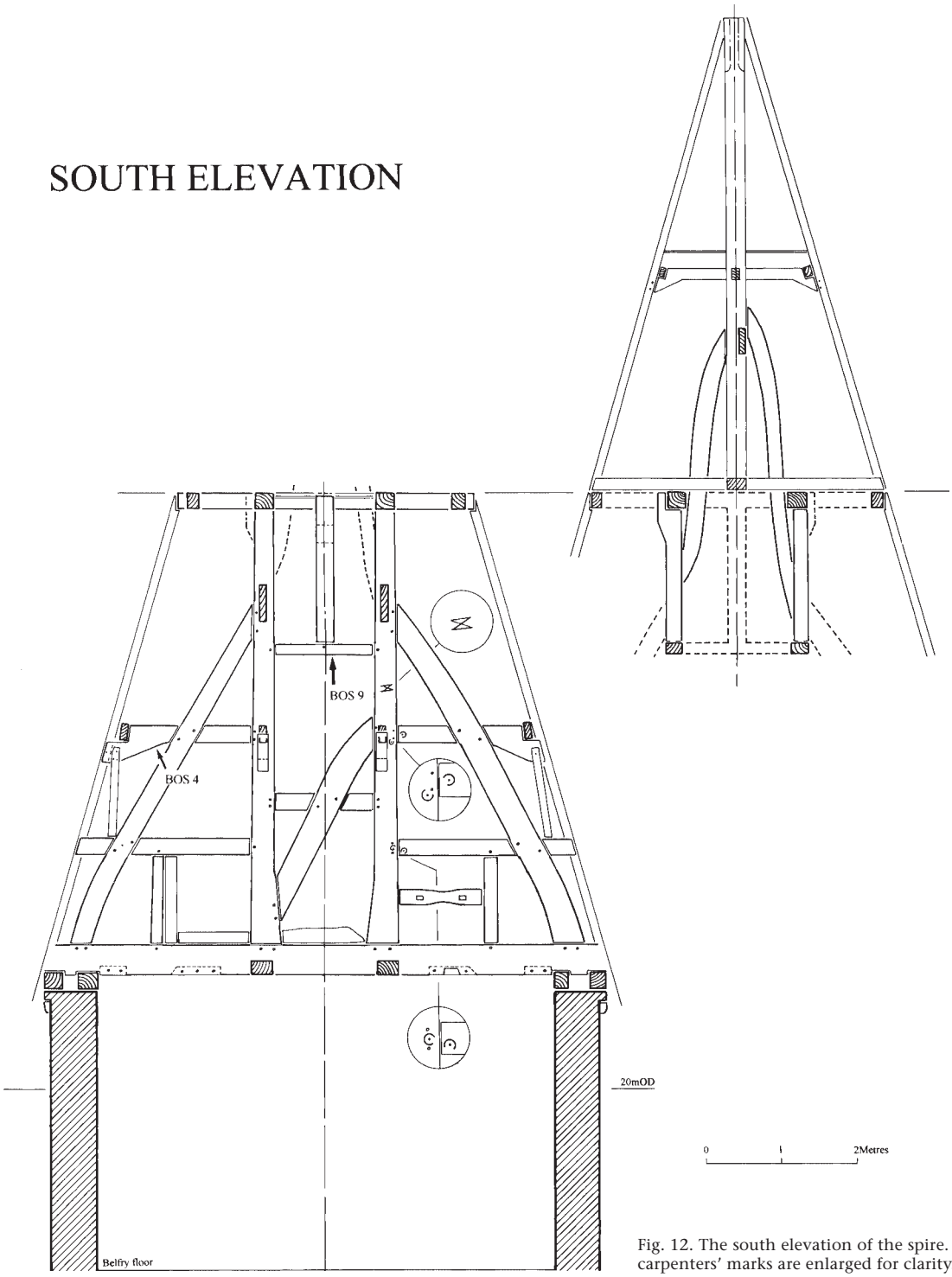

Fig. 12. The south elevation of the spire. The carpenters' marks are enlarged for clarity.

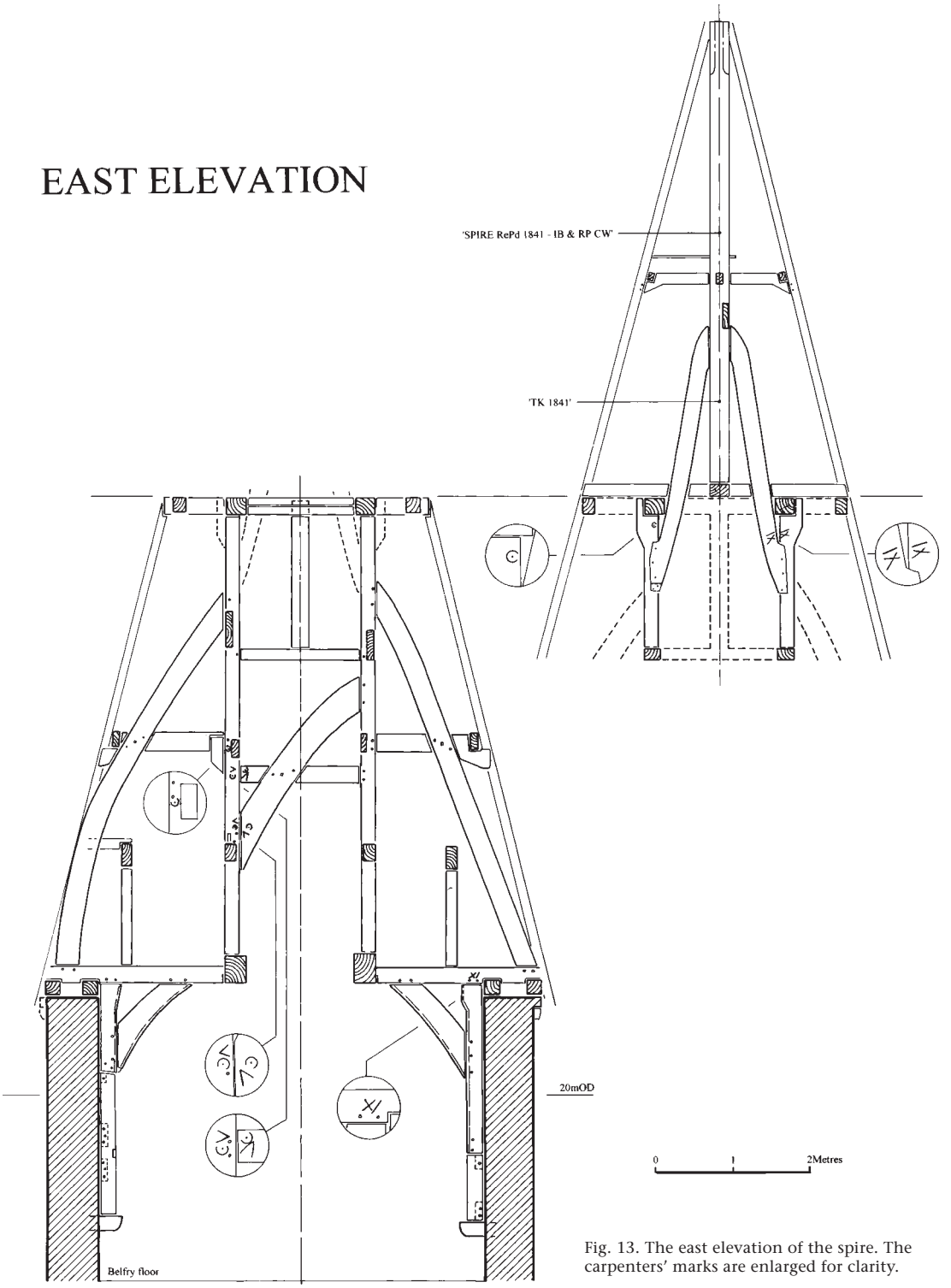

Fig. 13. The east elevation of the spire. The carpenters' marks are enlarged for clarity.

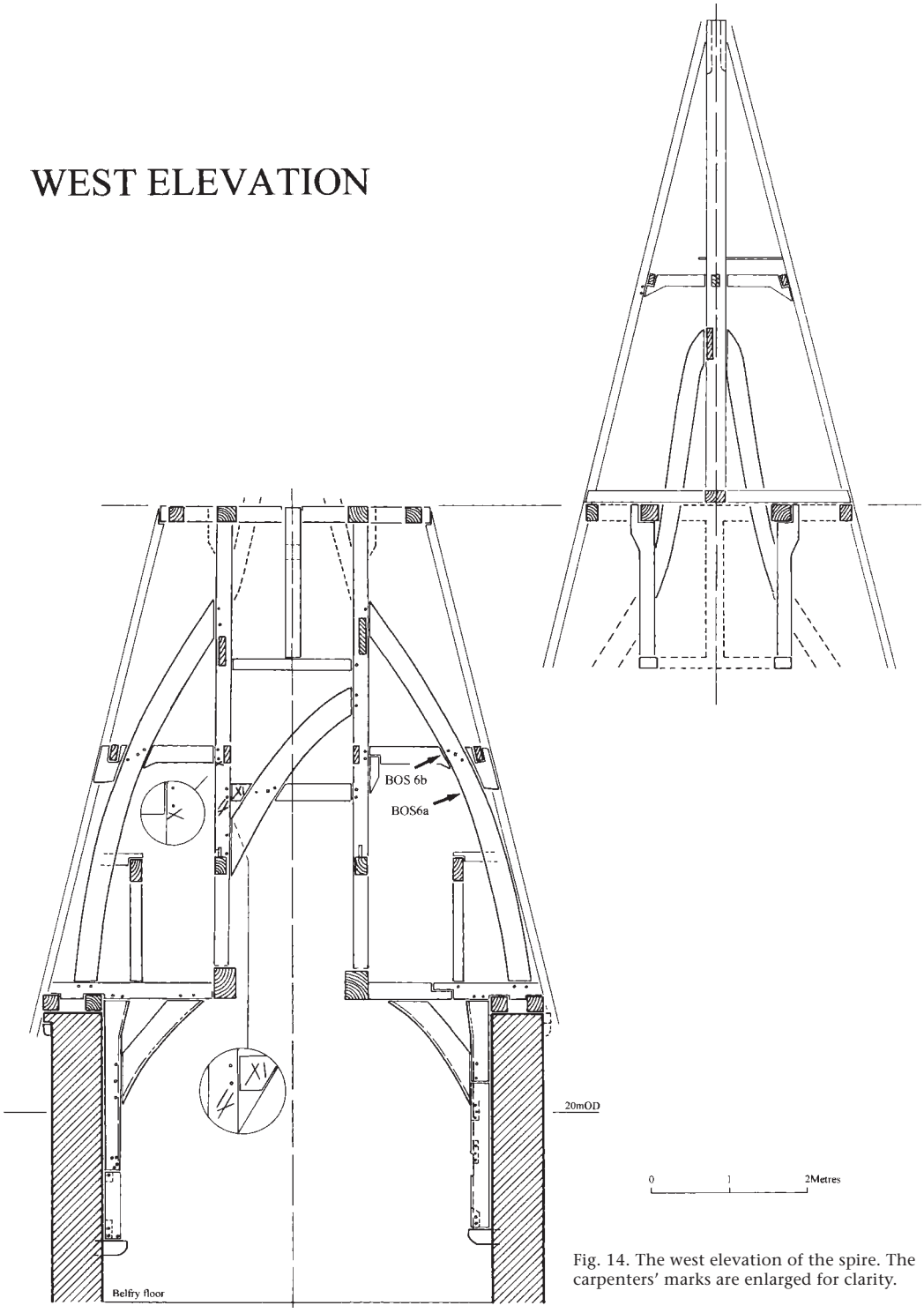

Fig. 14. The west elevation of the spire. The carpenters' marks are enlarged for clarity.

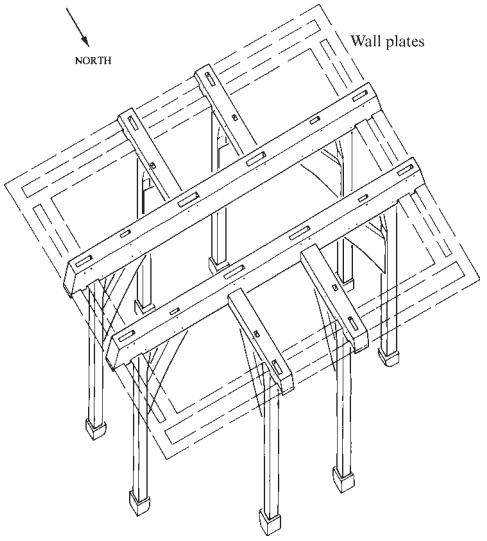

Fig. 15. Diagram, in part reconstruction, showing the main beams and their supporting posts and braces.

tower, measuring 1.92 m east–west by 1.86 m at the base, tapering slightly upwards. It consists of four main posts each 5.72 m long, eight horizontal rails, four diagonal braces, and four shorter intermediate upright posts (Figs 11–14 & 17).

The four main posts are tenoned into the tops of the east–west beams. Each of the four timbers measures 300 mm (12 in.) wide by 180 mm (7 in.) deep, expanding at the base to 420 mm (16.5 in.) wide and at the tops in the case of the two at the north-east and north-west corners to 350 mm (14 in.) wide. The diagonal braces are halved and pegged over the lower rails and above them a set of four upper rails support four intermediate posts. The four main posts and the four intermediate posts are all tenoned at the top to provide a seating for the top frame. Observations made on site, which were restricted by limited access available to this level, appeared to suggest that the main corner-posts may each carry a T-shaped tenon into the lower members of the top frame. It has subsequently been suggested to me that T-shaped tenons would be unusual and they are more likely to have north–south tenons (Fig. 17). The intermediate posts carry a tenon and an upstand at the head of an external jowl (Figs 17 & 21).

Extending east and west from the main frame are the rails and studs which support on the south side the surviving windlass, for raising and lowering the bells, and on the north side one side of a bell-frame. On the north and south sides of the main frames, and supported on the secondary beams and corner-braces, are additional studs, rails and braces. These form the remaining side of a north bell frame, for two bells, and a south frame, which appears to have no particular function other than supporting the feet of rafters (Fig. 18).

The main frame is stabilized by eight shores, those on the north and south sides rising to a higher level than those on the east and west sides. All eight are

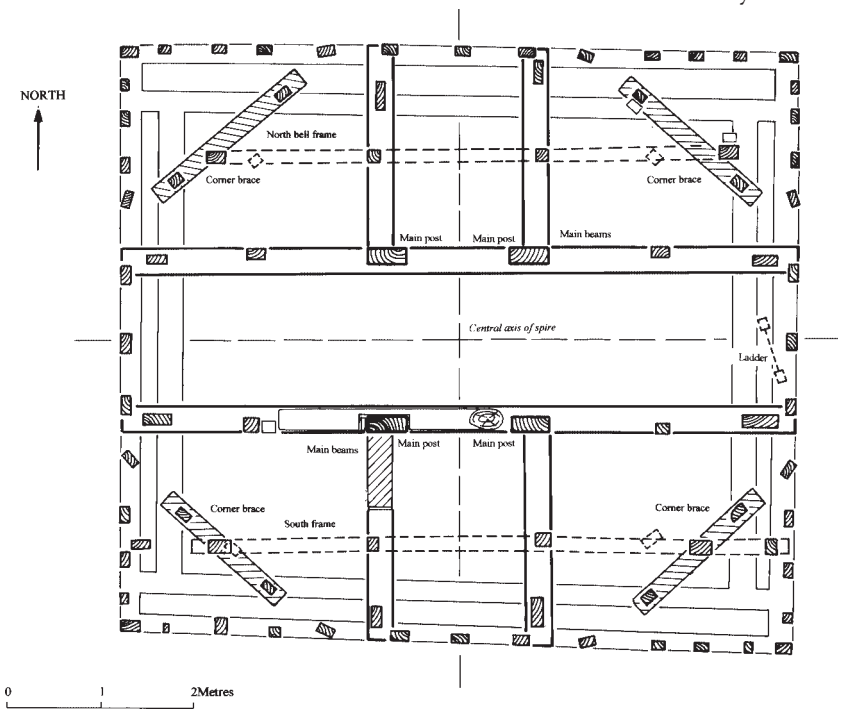

Fig. 16. Plan at the base of the spire, showing the main beams, main posts, corner-braces, north and south frames, and rafter feet. Replacement timbers are shown hatched diagonally.

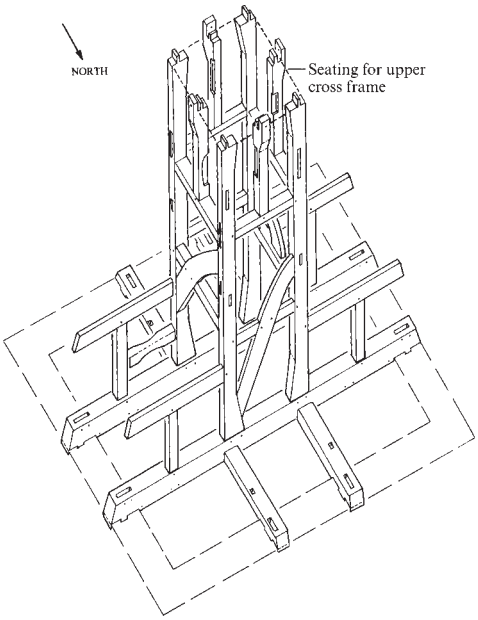

Fig. 17. Diagram showing the main beams and the main frame of the spire.

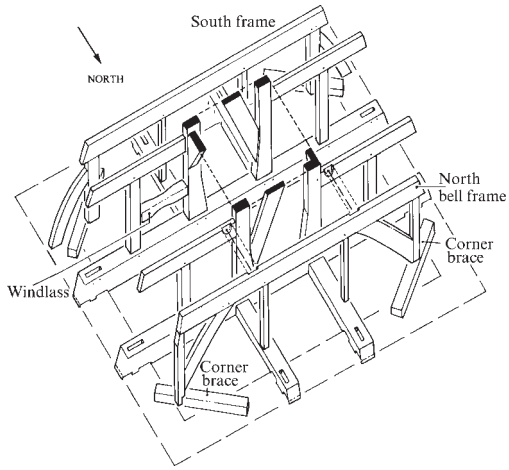

Fig. 18. Diagram showing the base of the main frame of the spire and the north bell frame and the south frame.

tenoned and pegged at their lower ends into the main and secondary beams of the 'base frame' and into the posts at their upper ends (Fig. 19). The shores on the east and west sides are halved and pegged across the rails of the bell-frames.

The octagonal shape required to form the spire is provided part way up the main frame by a series of eight brackets tenoned into the main posts and halved across the shores; their projecting ends carry eight purlins or plates tying them together (Figs 20 & 21). During the preparation of this paper there was some discussion with specialists concerning how these timbers should be referred to. On the one hand it was suggested that, strictly speaking since the timbers which the author had originally referred to as purlins are in the plane of the roof, they should be termed 'plates'. On the other hand it was noted that plates can be defined as members which in a roof support a roof truss, or in the case of a belfry tower, give direct support to a timber superstructure, or upper tier of timber framework. This can be contrasted with the term 'purlin' which relates specifically to a member which gives support to the common rafters (only the rafters and not the main framing element). In view of these comments, the term 'purlins or plates' is used throughout the article. On the north and south sides struts have been nailed onto

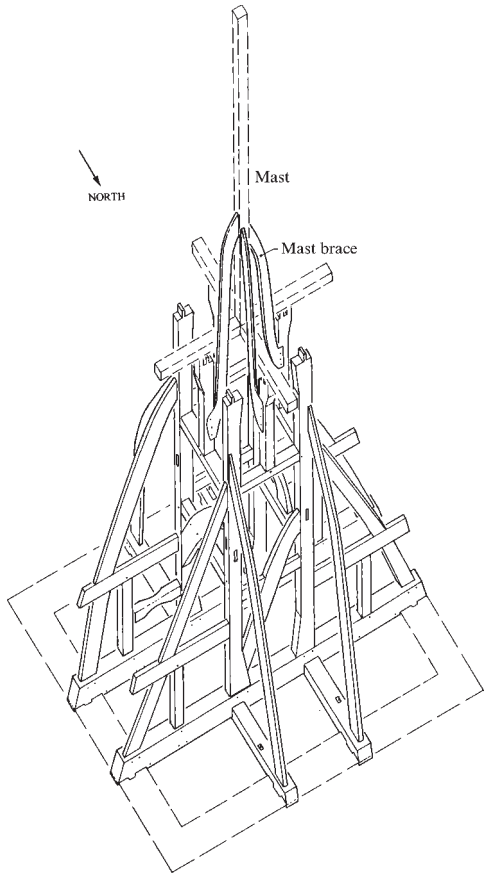

Fig. 19. Diagram showing the main frame of the spire and the shores.

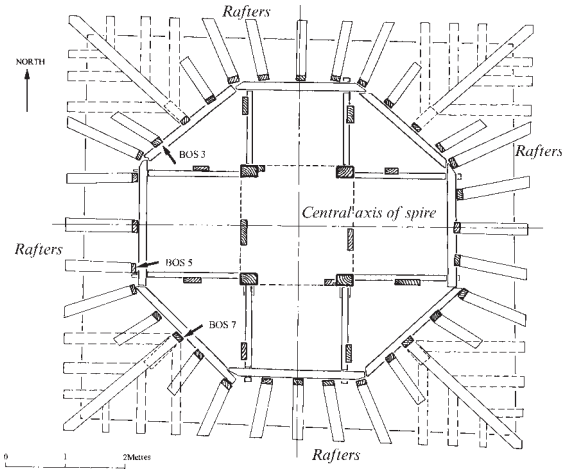

Fig. 20. Plan showing the brackets, purlins or plates, and rafters.

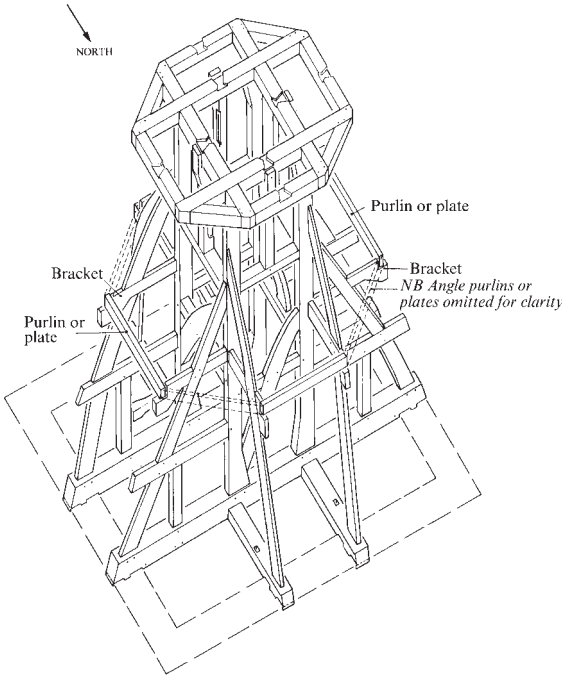

Fig. 21. Diagram showing the main frame of the spire with lower shores, brackets, purlins or plates, and top frame added.

the brackets at a later date to keep them in position.

At the top of the main frame the octagonal shape is formed by the top frame (Figs 21 & 22). It comprises two beams extending east–west across the top and beyond the sides of the main frame, and is halved across two similar beams extending in the

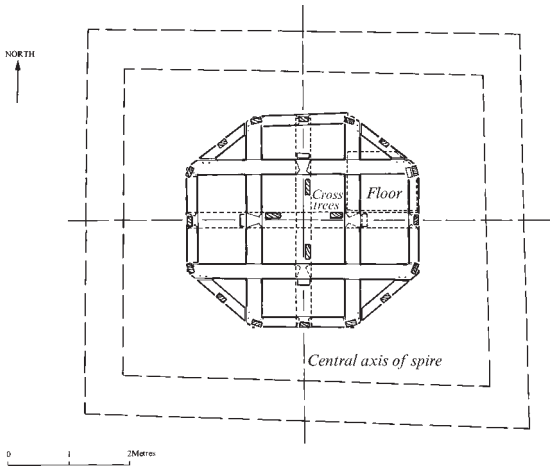

Fig. 22. Plan showing the top frame and purlins or plates.

opposite direction to form a cross with arms of unequal length, those to the east and west being longer than those to the north and south. The result is an octagonal shape longer east–west than north–south. All four timbers measure 280 mm (11 in.) wide by 230 mm (9 in.) deep and the lower two are morticed and pegged onto the tenons at the top of the eight posts in the main frame. The ends of the beams carry an upper tier of purlins or plates on an octagonal plan, with pegged mortice-and-tenon joints.

The mast (Fig. 19), the top of which rises to a height of 12.75 m above the wall tops (i.e. 34.05 m OD) and which is 230 mm (9 in.) square in section, is seated on a pair of cross-trees. These cross-trees lie in full-width lap dovetail joints with entrant shoulders in the top face of the top frame, in the same way as the main beams are secured to the wall-plates (Figs 18, 21 & 22).

Rising from the intermediate posts of the main frame, into which they are trenched and nailed, are four shores which clasp the mast at a point about one third of its height. These smaller shores seem to be original but the present cross-trees and mast are replacements. The mast bears two carved inscriptions, both on its east face. One, which reads 'TK1841', is immediately below the point where the shores join it, whilst the other written along the line of the mast somewhat higher up reads 'SPIRE RePd 1841 • IB & RP CW' (Fig. 13). It is evident that the cross-trees and mast were replaced at that time. It is probable that the arrangement of four small brackets and purlins at a higher level giving additional support to the rafters and providing a

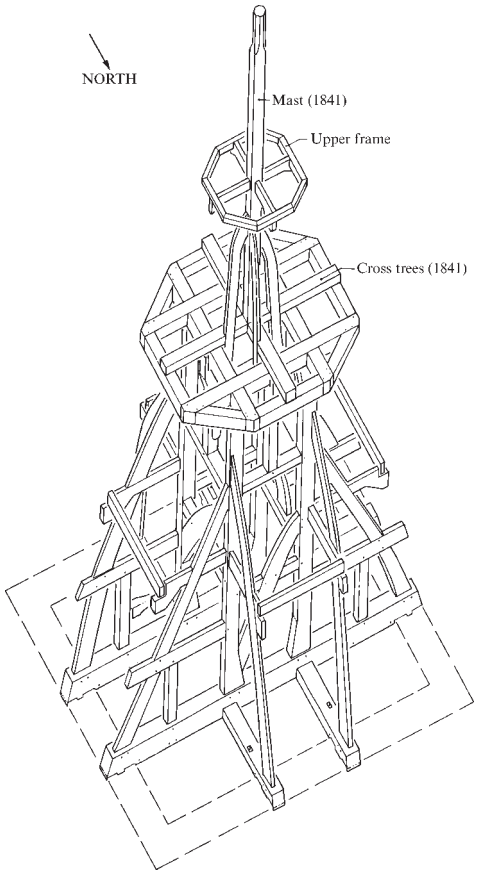

Fig. 23. Diagram showing the complete spire frame, with cross-trees, mast and upper frame added. The north and south frames are omitted for clarity.

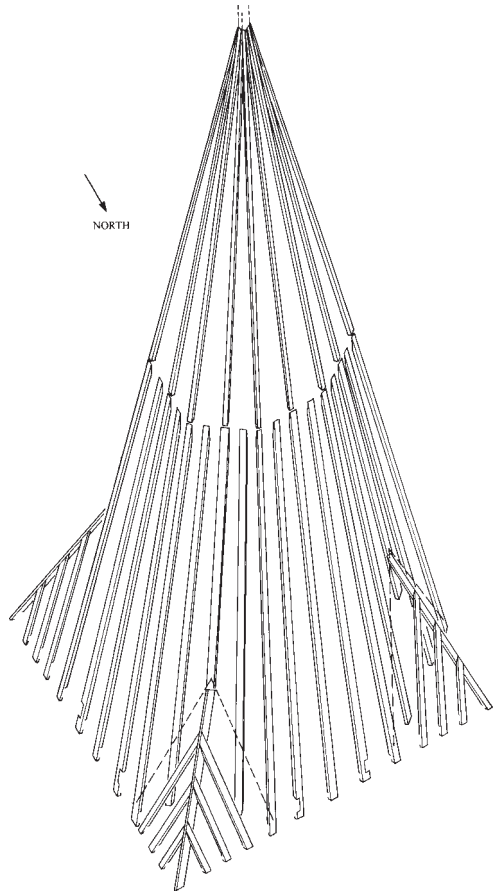

Fig. 24. Diagram showing the arrangement of lower and upper rafters.

small floor area for inspection purposes was also added then as an upper frame (Fig. 23).

The lower rafters which form the four principal sides of the spire extend from the plates of the top frame down to the wall-plates over which they are birds-mouthed (Fig. 24). There are five on each side (north, south, east and west), those at each end being slightly canted. Each of the four angles of the spire, which convert its plan from a rectangle (Fig. 19) to an octagon, is formed by three more rafters. That in the centre of each angle is supported, somewhat precariously, on the upper rails of the north bell frame and the south frame, whilst the remainder are supported on the corner braces. They all derive additional support approximately half way along their length by the intermediate frame of brackets and purlins or plates (Fig. 21). Many of the 32 lower rafters appear to be the originals.

The upper rafters sit on the cross frame and rise to the top of the mast, which is chamfered to take them. They are given additional support by the upper set of brackets and purlins or plates, probably added in 1841. With the exception of three replacements on the east side, all 16 upper rafters appear to be originals.

There is an old wooden ladder giving access to the upper levels of the main frame on its east side and this may be an original feature.

A number of carpenters' marks, both scratched and produced with a race knife, were noted on the timbers and these are shown in their actual locations and enlarged on the elevation drawings (Figs 11–14). However, because of limited access it was not possible to examine all the exposed surfaces and other marks may exist. They include numerals, both in Roman form and with the occasional use of a centred arc — presumably used either as a numeral

Table 2. Holy Trinity Church Spire, Bosham, West Sussex: summary of tree-ring dating.

Sample no.		Timber and position	Dates AD spanning	H/S bdry	Sapwood compliment	No. of rings	Mean width mm	Std devn mm	Mean sens mm	Felling seasons & dates/date ranges
**bos1*	c	Lower rail in centre	1303–1397	1382	15	95	1.62	0.44	0.156	?
bos2ai	c	W outer rail/bell support N frame	not datable			46	2.63	1.24	0.186	?
bos2aii	c	ditto	1333–1385	1385	H/S	53	2.21	0.55	0.168	?
bos2bi	c	ditto	not datable			35	2.07	0.96	0.200	?
bos2bii	c	ditto	1321–1401	1385	16	81	1.75	0.61	0.203	?
**bos2*		Mean of *bos2aii* + *bos2bii*	1321–1401	1385	16	81	1.86	0.62	0.180	?
bos3	c	SW rafter NW cant level 1–2	not datable		H/S	84	1.55	0.84	0.180	?
bos4a	c	W bracket S frame level 2	1305–1405	1384	21	101	1.33	0.55	0.187	?
bos4bi	c	ditto	1324–1352			29	1.41	0.31	0.223	?
bos4bii	c	ditto	not datable		$27^1/_4$C	52	1.10	0.20	0.159	?
bos4		Mean of *bos4a* + *bos4bi*	1305–1405	1384	21	101	1.34	0.54	0.177	?
**bos5*	c	S rafter W cant level 1–2	1312–1405	1390	15C	94	1.44	0.42	0.212	Winter 1405/6
bos6a	c	S outer brace W frame level 1–3	1303–1398	1385	13	96	1.93	0.87	0.208	?
bos6b	c	ditto	1364–1404	1388	16	41	1.21	0.40	0.236	?
**bos6*		Mean of *bos6a* + *bos6b*	1303–1404	1386	15	102	1.90	0.86	0.207	?
**bos7*	c	Centre rafter SW cant level 1–2	1313–1405	1388	$17^1/_2$C	93	1.45	0.53	0.173	Summer 1406
bos8	c	E inner brace N frame level 3	not datable		$29^1/_4$C	72	1.25	0.83	0.198	?
bos9	c	Inner rail S frame level 2	not datable		$27^1/_2$C	72	1.76	0.65	0.167	?
* = *Bosham Site Master* (the total span of years represented by the most reliable samples)			1303–1405			103	1.71	0.57	0.138	

Key: * = sample included in the *Bosham Site Master* (the total span of years represented by the most reliable samples); c = core; $^1/_4$C, $^1/_2$C, C = bark edge present, partial or complete ring: $^1/_4$C = spring (ring not measured), $^1/_2$C = summer/autumn, or C = winter felling (ring measured); H/S bdry = heartwood/sapwood boundary - last heartwood ring date; std devn = standard deviation; mean sens = mean sensitivity; ? = samples did not run out to the bark, hence no precise date of felling can be ascertained.

or as a 'tag' added to the assembly mark to show to which side of the frame it relates. In addition there are two locations where hewing marks of the type described by Miles & Russell (1995) exist; they are in the form of a diagonal cross with a horizontal line at the top and bottom.

The author is satisfied that, apart from alterations identified as having been made in 1841 and a small number of other repairs or replacements, the entire structure, including the north bell-frame and the south frame, was of a single design and constructed of recently felled timbers. The repairs of the four posts below the main beams can be readily identified, having been carried out with re-used timbers.

DENDROCHRONOLOGY
by Dan Miles & Michael Worthington

Preliminary inspection of the large timbers which formed the main beams and posts of the structure indicated that these had been made from fast-growing trees with widely-spaced rings and were unsuitable for sampling. Suitable samples were taken from horizontal rails, braces, a bracket, and rafters and these have provided consistent felling dates for the winter of 1405/06 and the summer of 1406. Results are summarized in Table 2.

Acknowledgements
The author is grateful to the Bosham Parochial Church Council and The Conservation Practice for permission to base his drawings on the record drawings commissioned in 1998; to Bob Meeson MA FSA MIFA and Richard Bond for reading and commenting on drafts of the text; and to English Heritage for grant aid to prepare the report.

Authors: Fred Aldsworth, 124 Whyke Road, Chichester, West Sussex, PO19 2JG; Kathryn Morrison, Buildings Investigator, English Heritage, 24 Brooklands Avenue, Cambridge, CB2 2BU; Dan Miles & Michael Worthington, Oxford Dendrochronology Laboratory, Mill Farm, Mapledurham, South Oxfordshire, RG4 7TX

REFERENCES

Aldsworth, F. G. 1990. Recent observations on the tower of Holy Trinity Church, Bosham, *Sussex Archaeological Collections* **128**, 55–72.

Miles, D. W. H. & **Russell, H.** 1995. Plumb & level marks. *Vernacular Architecture* **26**, 33–8.