Archaeological investigations at the ASDA site, Crawley, West Sussex

by Simon Stevens

with contributions by
Luke Barber
Samantha Crawt
Chris Butler
Lucy Sibun
Wendy Carruthers
Rowena Gale
Enid Allison
John Carrott

An archaeological evaluation of the site carried out in June 2002 revealed a range of surviving archaeological deposits, despite extensive modern truncation. Seven separate areas of the site were then subjected to full excavation and recording based on potential identified during the evaluation. Although small quantities of flintwork were recovered from the overburden of one area, all of the excavated features dated from the medieval and post-medieval periods, with the majority of features dating from the mid-thirteenth to the third quarter of the fourteenth century. Two ironworking hearths and large quantities of slag were encountered as well as evidence of the deposition of domestic refuse in pits and ditches. A thirteenth-century well produced a remarkable assemblage of artefacts and environmental evidence including a large group of insect remains.

INTRODUCTION

Planning permission was granted by Crawley Borough Council for the demolition of existing buildings and the erection of retail and residential buildings at a large site to the southwest of the modern commercial centre of Crawley (NGR TQ 26591 36516) (Fig. 1). Following consultation between Crawley Borough Council and West Sussex County Council (Crawley Borough Council's advisers on archaeological issues) a requirement for an archaeological evaluation of the site was made a condition of the permission. This initial phase of work involved mechanically-excavated trial trenches and the recording of standing buildings and associated remains (Johnson 1999; Jones & Sibun 2000).

Archaeology South-East (a division of University College London Field Archaeology Unit) was commissioned by MJ Gleeson Group plc to undertake the archaeological work. The initial investigations were carried out in June 2002 and a range of archaeological features were encountered. Based on the results of the evaluation, further archaeological work was recommended (Fig. 2). The excavation of these areas was undertaken between July and October 2002.

ARCHAEOLOGICAL BACKGROUND

The site lies at the southern end of the High Street, close to the presumed historic core of the medieval Wealden market town of Crawley at elevations varying between *c.* 74 m OD and *c.* 78 m OD. The underlying geology is Upper Tunbridge Wells Sand with Weald Clay to the north. A number of archaeological sites have been excavated in the vicinity and in other parts of the town in recent years, supporting documentary evidence which suggests that Crawley was an important centre in the medieval period, its wealth based on the iron industry. Following the grant of a market charter to Michael de Poynings in 1202/3 (Salzman 1940, 145), the settlement apparently prospered and by the fourteenth century there were tanners, cloth-weavers and ironworkers in the town (Gardiner 1997).

Archaeological work carried out along the line of the Crawley High Street Relief Road in 1995 uncovered various medieval features within the boundaries of the current site and elsewhere on the road line (Saunders 1998). Excavations at the Old Post Office in 1995, on the opposite side of the High Street to the site, revealed thirteenth- to fourteenth-century cesspits and rubbish pits and the remains of a house probably dating from the sixteenth century (Stevens 1997); a watching brief uncovered further medieval material in the area at the corner of High Street and Pegler Way (Stevens 1999). Significant quantities of ironworking slag were recovered during the larger of these investigations, providing evidence for industrial processes which have been carried out in the area since at least the Romano-British period (Cartwright 1992).

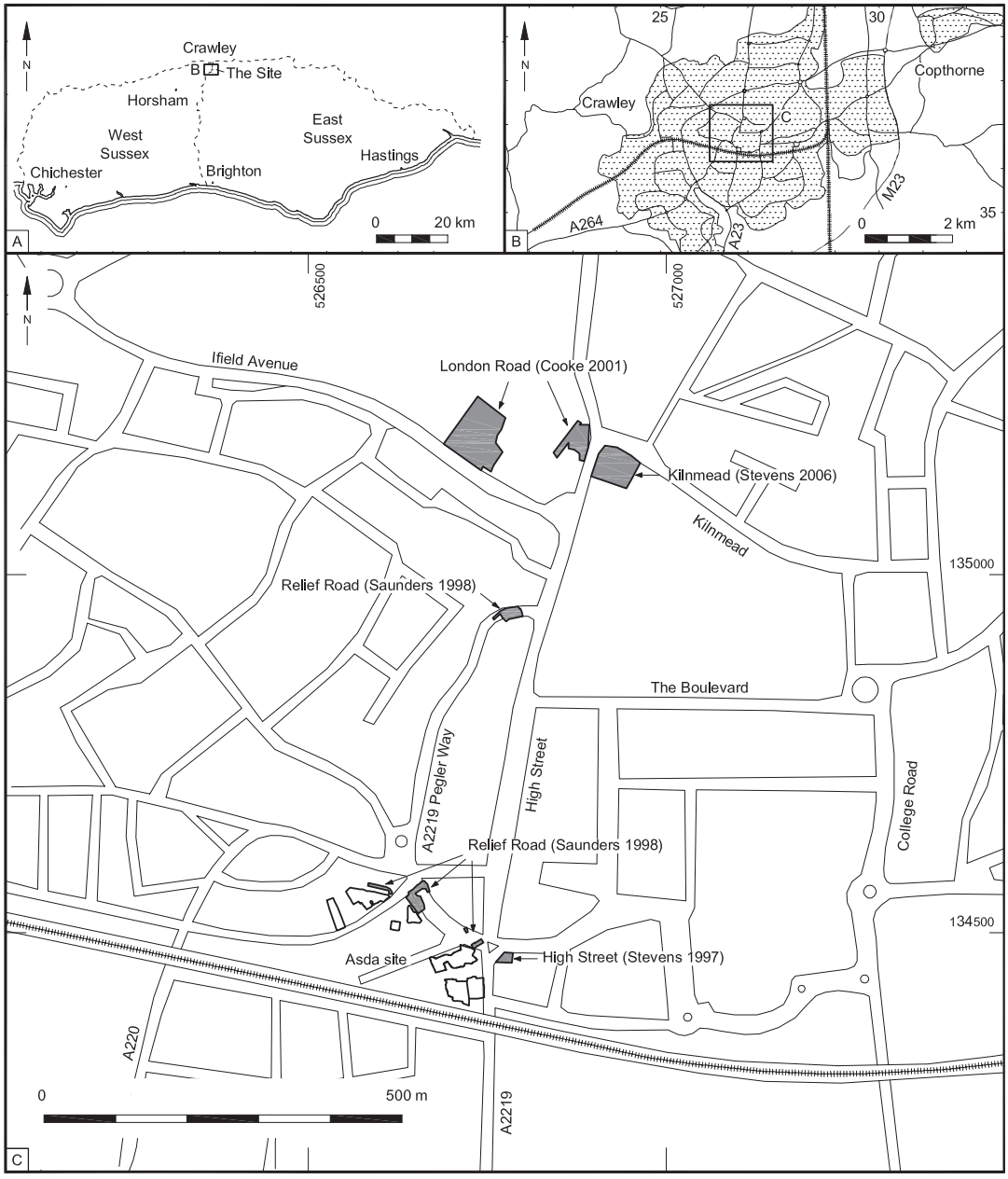

Fig. 1. Location plan of current and other sites referenced in text.

Excavation work *c.* 700 m to the north of the current site uncovered remains of *in situ* medieval ironworking hearths. Archaeomagnetic dating suggested a late fourteenth- to early-fifteenth-century date for the features (Cooke 2001). A group of medieval pits containing ironworking slag were discovered on the opposite side of London Road, a continuation of the medieval High Street (Stevens 2006).

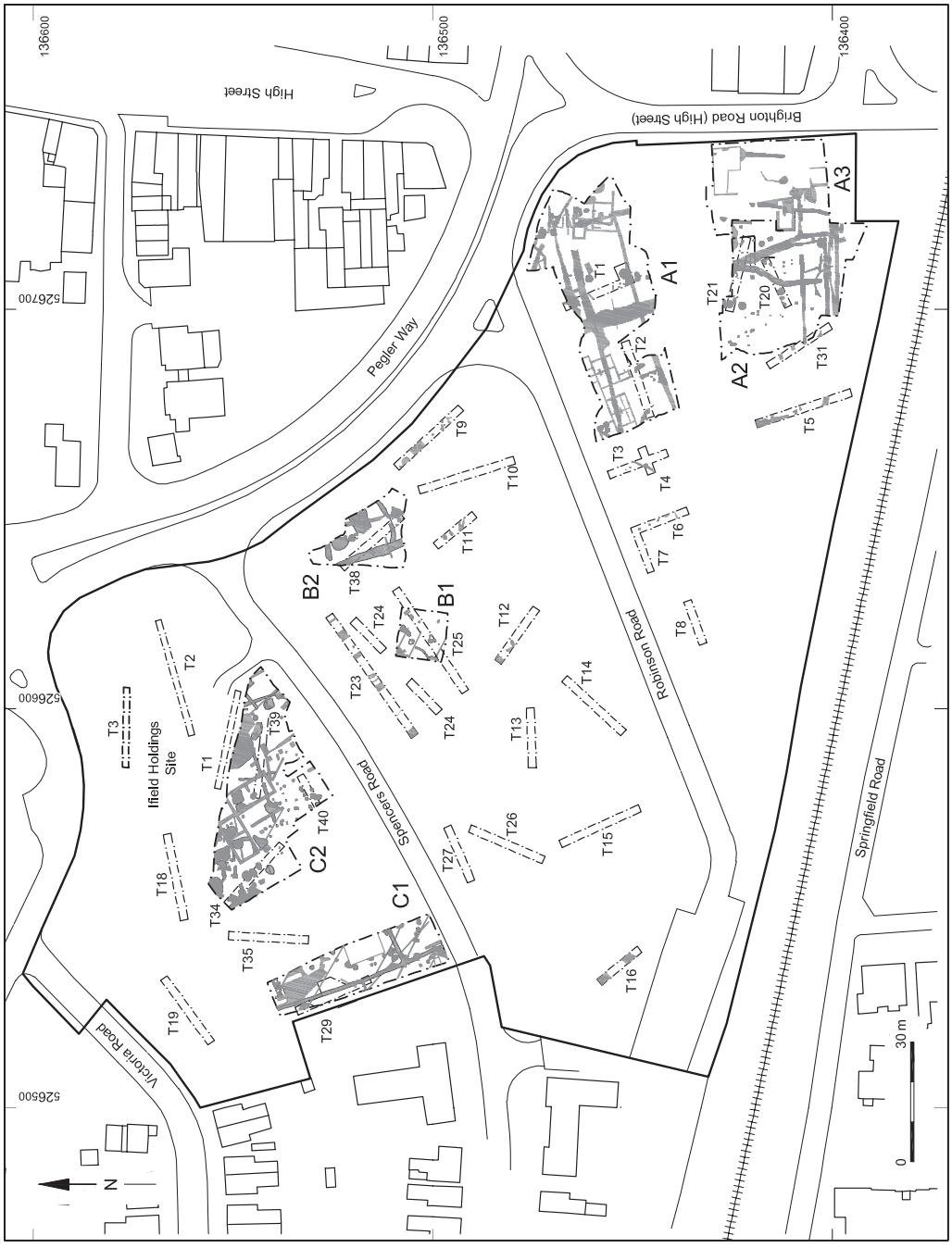

Fig. 2. Trench and excavation area location plan.

THE ARCHAEOLOGICAL EXCAVATION (Figs 2–9)

Evaluation of the site, by 35 trenches, provided evidence for both undated and medieval post-holes and shallow gullies and ditches. Sixteen trenches were archaeologically sterile, but based on the results from the other trenches, seven discrete areas were opened for excavation and recording (Fig. 2: Areas A1, A2, A3, B1, B2, C1 and C2). There was considerable modern truncation in the majority of the examined areas, but a range of archaeological features survived. The datable features were assigned to one of five recognized phases of activity at the site.

THE FEATURES

Phase 1: AD 900–1100

The pottery dated to this phase consists of part of a single Saxo-Norman vessel recovered from a shallow pit [4], recorded during the evaluation. Subsequently, area B1 was located in this part of the site. A small group of features were excavated but none produced any dating evidence (Fig. 3). Flintwork dating from the Mesolithic or Early Neolithic periods was recovered from the overburden.

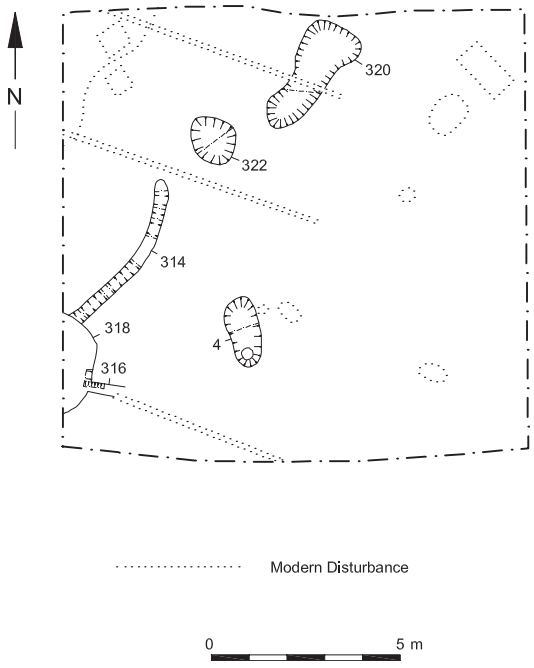

Fig. 3. Plan of Area B1.

Phase 2: AD 1100–1275

Features dated to this phase were encountered thinly spread across the site, but with a notable concentration in the northwestern corner of excavation area A1 (Fig. 4). This isolated group consisted of three pits: [214], [250] and [234], and a short stretch and terminus of a gully [292], each containing small assemblages of pottery ranging in date from the late twelfth to the early thirteenth century, as well as ironworking slag and fragments of hearth lining suggesting ironworking activity in the immediate vicinity, presumably to the north, beyond the boundaries of the excavation.

Other features of this date were found in area A2 (Fig. 5, pit [166]) and area C2 (Fig. 9, pit [124]). Two features situated adjacent to each other in area B2 were of early- to mid-thirteenth-century date (Fig. 7, pit [326] and gully [329]). Again, all of these features contained small assemblages of pottery and ironworking slag, but in common with all phases, environmental evidence was limited.

Phase 3: AD 1250–1375

The majority of dated features belong to this phase, with more than 70 contexts containing pottery dating from the mid-thirteenth to the third quarter of the fourteenth century encountered across the site in all of the excavation areas except B1. There were very few large assemblages and most of the features contained only a handful of pottery sherds, usually associated with ironworking slag. However, there were a number of significant features dated to this phase, some suggesting that the plot boundaries in this part of the town had been laid out by this date.

Two such boundary ditches, [252] and [254], apparently marking (and perhaps then re-establishing) the southern edge of a plot fronting onto the High Street in area A2 were infilled in this period (Fig. 5). Another ditch [199], of contemporary date, ran parallel to these features and perhaps continued to the west as the undated gully [188], and there were other broadly contemporary gullies in this complex such as [177] from which a fragment of German lava quernstone was recovered from fill [178]. Similar ditches of this period were encountered in area A1, such as [267] and [303] (Fig. 4), and also gully [373] in area A3 (Fig. 6). Minor quantities of thirteenth- and early- to mid-fourteenth-century pottery had also been deposited in small pits, such as [236] and [288] in area A1 (Fig. 4), with a slightly larger assemblage of

Fig. 4. Plan of Area A1.

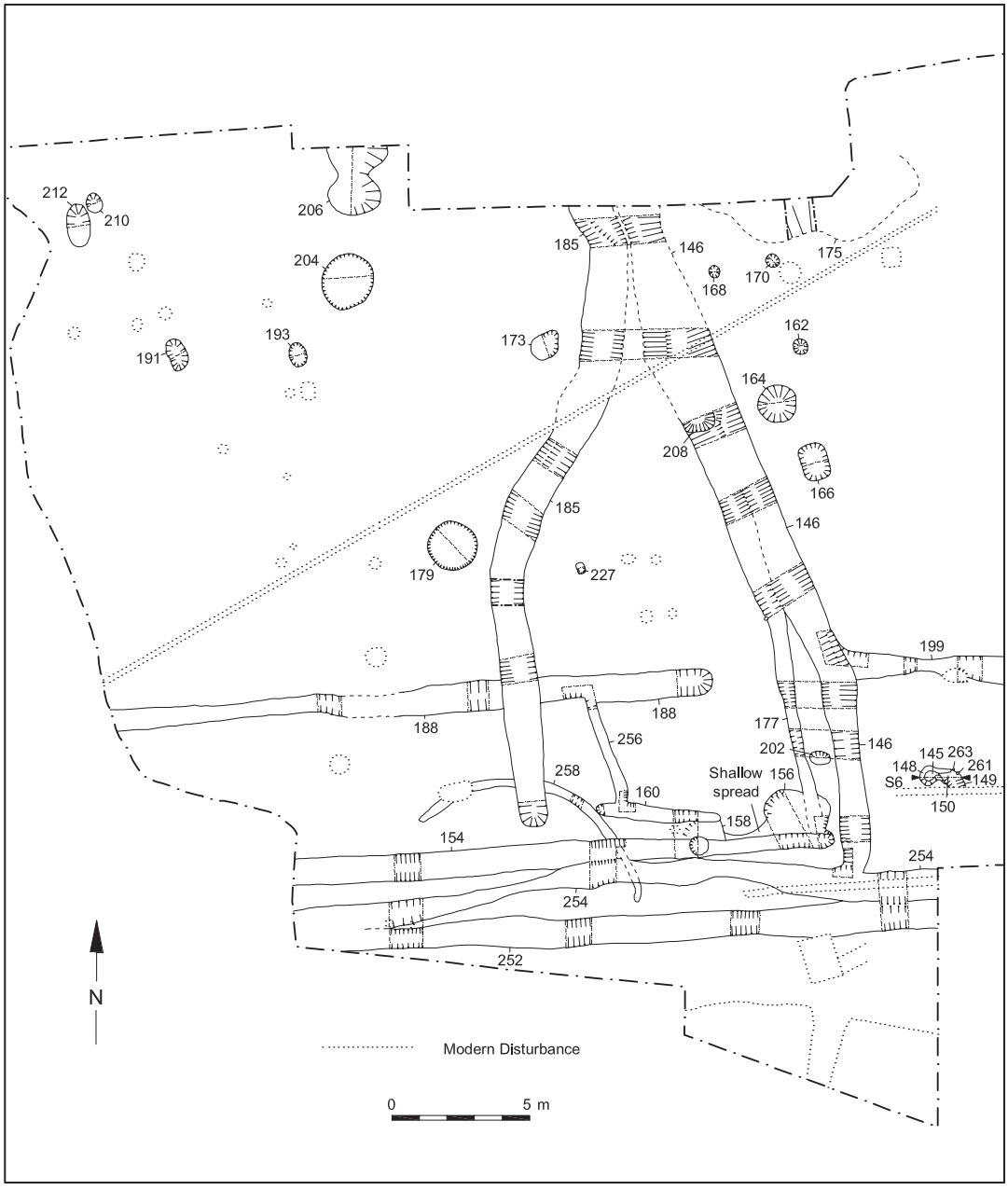

Fig. 5. Plan of Area A2.

fourteenth-century material in a heavily truncated pit, [370] in area A3 (Fig. 6).

Only nine sherds of thirteenth-century pottery were recovered from area B2, from the fill of a gully [340] (re-cut of [338], Fig. 7). The remainder (and majority) of material positively dated to this phase came from areas C1 and C2. Small quantities of pottery were recovered from area C1, from small pits (for example [404] and [426] Fig. 8), sited in plots/enclosures demarcated by gullies of the same

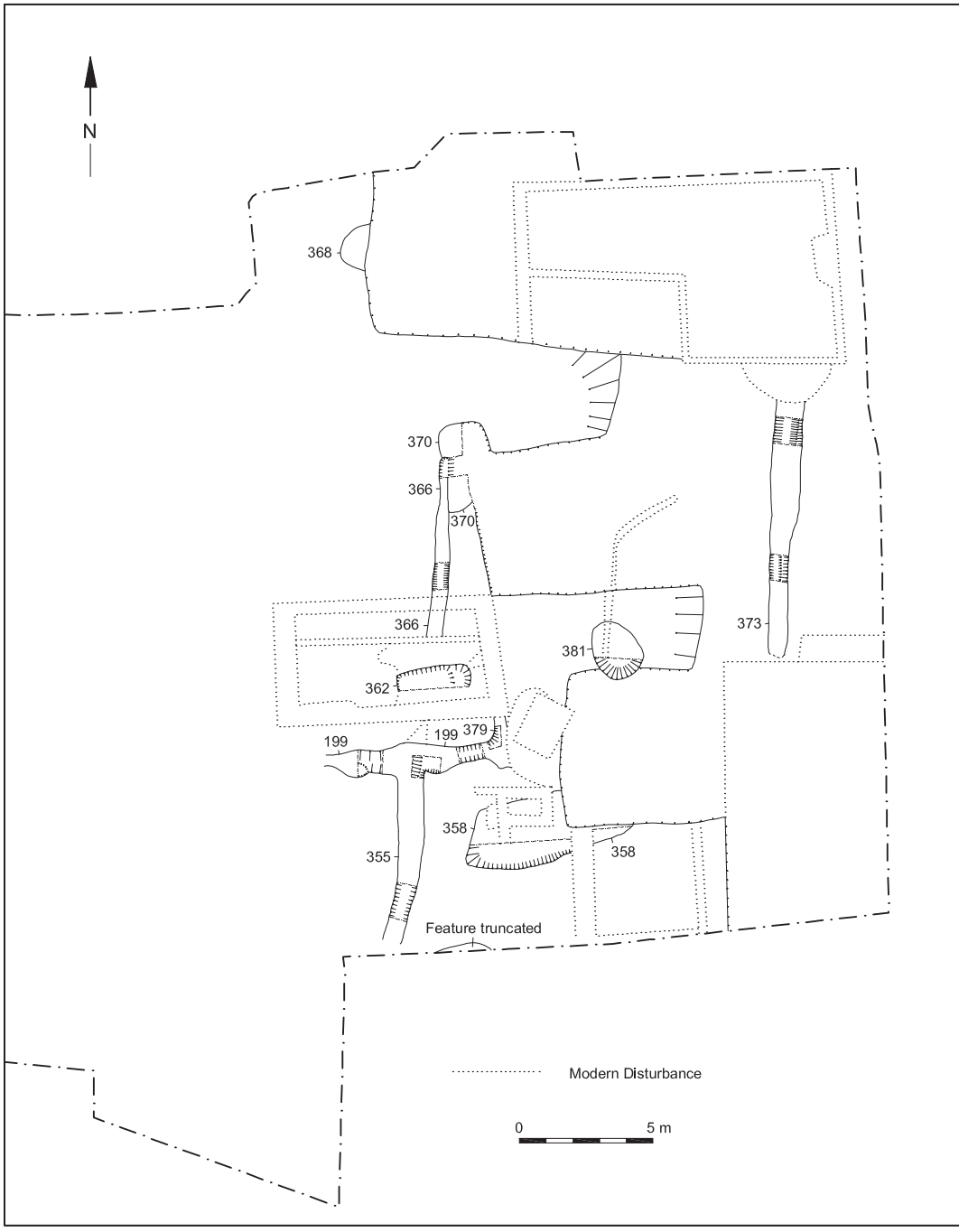

Fig. 6. Plan of Area A3.

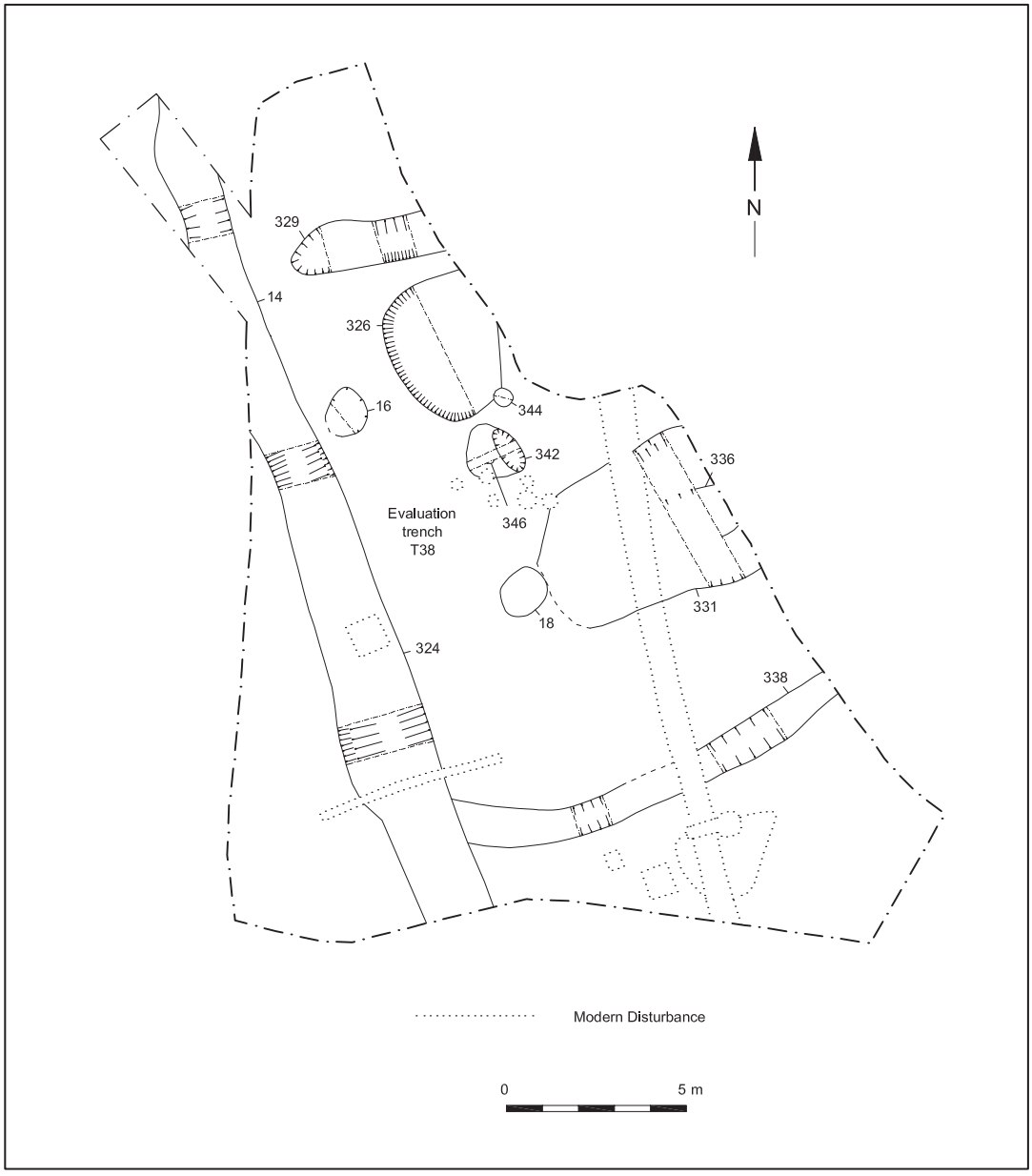

Fig. 7. Plan of Area B2.

period ([351] and [353]). However, dating is often based on the recovery of single sherds and is open to some doubt. A considerably larger assemblage came from a silty flood deposit [432], encountered at the northern end of the excavation area, possibly associated with a local pond fed by streams and a spring (Hygate 2003, 128). This deposit had sealed other features dated to this phase (e.g. gully [435] and pit [437]), as well as a small group of undated features. The flood deposit and underlying features were all thirteenth-/fourteenth-century in date.

Limited quantities of pottery of this date were recovered from area C2 (Fig. 9) from small pits (e.g. [460] and [497]), and post-holes (e.g. [514]),

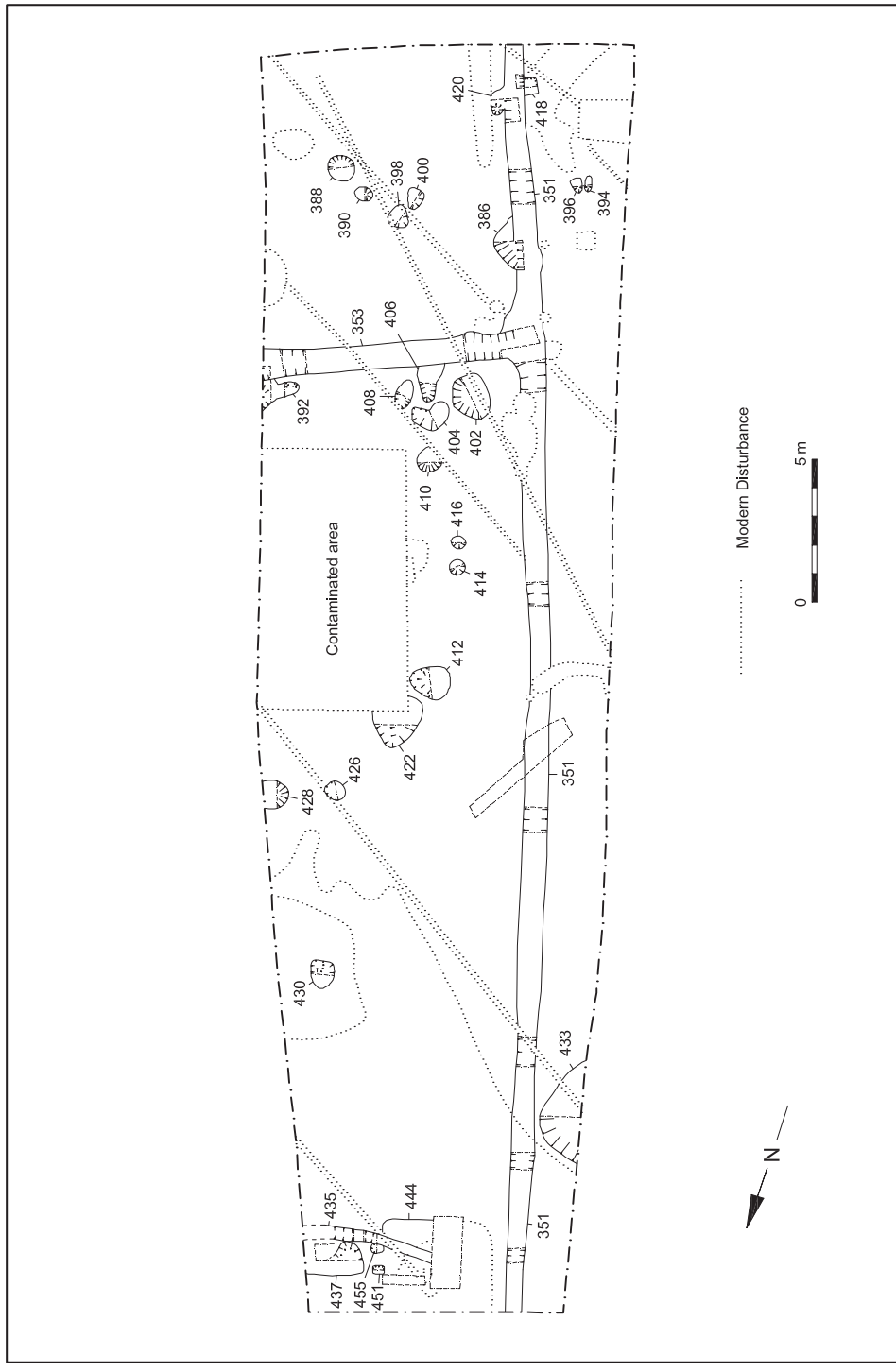

Fig. 8. Plan of Area C1.

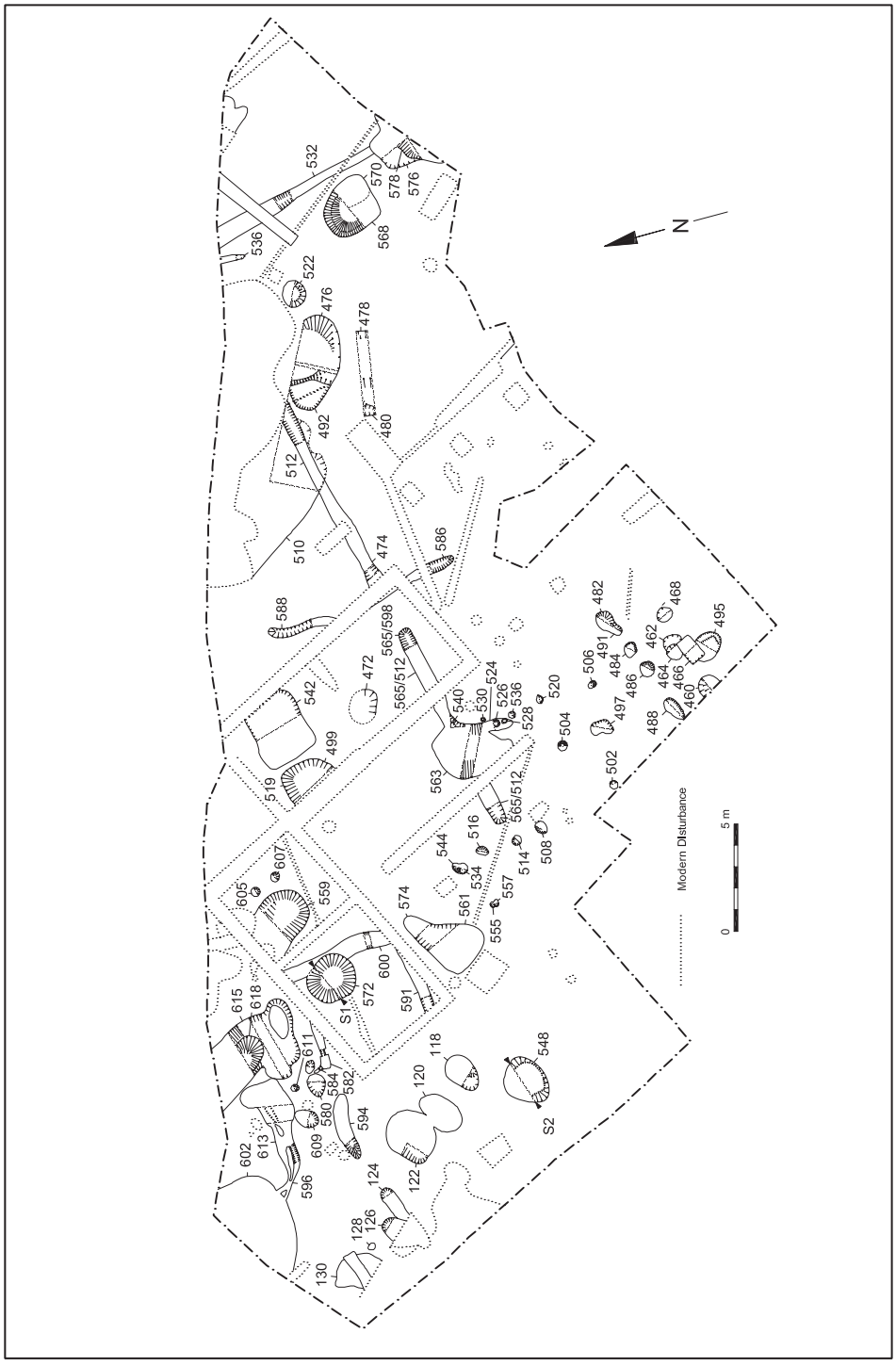

Fig. 9. Plan of Area C2.

but there were also more substantial rubbish pits (e.g. [572] Fig. 10, Section 1), and a probable cesspit ([548] Fig. 10, Section 2). A sample taken for intestinal parasites showed that none were present, but oak chips were recovered suggesting woodworking in the immediate vicinity. There was also a range of other artefacts, offering an insight into local medieval activity often absent from the other features at the site. These included an arrowhead, and the largest groups of medieval tile and roofing slates recovered from the site, as well as part of a hinge pivot, strongly suggesting the presence of a building in the vicinity. The pottery from the feature suggests a date range of 1250–1350.

A thimble of similar date was recovered from shallow gully [512], a domestic item again hinting at a structure of some kind in the vicinity. Although a number of post-holes were identified in the southern part of area C2, they did not form a pattern that could unequivocally be interpreted as the remains of a structure and it must be presumed that any 'domestic' structure(s) lay outside of the excavated area.

A number of features of this date were also encountered at the extreme eastern end of the area. Despite repeated severe flooding of this part of the site owing to heavy rain (which made re-examination of the features in T34 impossible), pottery dated to the thirteenth and fourteenth century was recovered from the surface of a large pit [602] and from smaller features such as [594] and [618] in the vicinity (Fig. 9). The latter feature and an undated pit ([615], fill [616]) were sealed by a working floor/surface made up of thin layers of ash, slag and redeposited clay. Both of the underlying features contained deposits of hammerscale, clear evidence of smithing in the immediate vicinity, suggesting that the working floor lay close to the site of a workshop containing an anvil.

Phase 4: AD 1300–1525

Although there are fewer contexts with pottery dated to this phase, the assemblages are on the whole large, and included substantial groups of pottery from pits, ditches and a well, usually associated with large quantities of ironworking slag. The 'overlap' of the two phases proved problematic in the case of the well, but after consideration it was included in this phase.

The southern boundary ditch [154] was re-established during this phase and intercutting ditches running north to south: [146] and [185], which might represent a re-cut, formed another boundary (Fig. 5; Fig. 10, Section 3). A large segment of forge bottom was recovered from [147] in addition to a small assemblage of pottery. These ditches continued into area A1, and appeared to continue to the north. There were a handful of shallow pits between these ditches and the High Street (e.g. [156] in area A2, Fig. 5; [362] in area A3, Fig. 6). There was also one substantial pit encountered in area A1. Nearly 600 sherds of late-fourteenth- to mid-fifteenth-century pottery and part of a whetstone were recovered from [282] (Fig. 10, Section 4; [302] might represent the remains of an older feature). A discontinuous gully also ran parallel to the ditches in area A3 ([366] and [355], Fig. 6).

No features dated to this phase were encountered in areas B1 or B2, and only two shallow pits of this date were recorded in area C1 ([390] and [426], Fig. 8) containing only three sherds of pottery between them. However, further assemblages of fourteenth- and fifteenth-century pottery were recovered from features in area C2, the largest assemblage from a shallow pit, [492] (Fig. 9). The feature also contained a small assemblage of animal bone, and a fragment of daub, both rare finds at the site and part of an anthropomorphic jug (Fig. 13, No. 36). Smaller assemblages of late-fourteenth to fifteenth-century pottery were recovered from shallow pits (e.g. [559], Fig. 9).

The most interesting feature of this phase was a well four metres deep [10] in area A1 (Fig. 4; Fig. 10, Section 5), apparently backfilled in the fourteenth century — on the evidence of the pottery assemblage. The feature was originally identified during the evaluation of the site, but was fully excavated (part manually, part mechanically) during the subsequent excavation. A remarkable assemblage of artefacts and environmental evidence was retrieved from the fills ([11], [12], [110], and [269] which was partially waterlogged). An almost complete anthropomorphic jug recovered from fill [269] was particularly striking (Fig. 13, No. 24), as was the sheer quantity of ironworking slag used to backfill the upper part of the well (over 20 kg were retained from fill [110], forming only a small percentage of the quantity deposited in the well). The waterlogged conditions near the base of the well led to excellent preservation of organic remains, including part of a shoe, charred and waterlogged plant remains, charcoal and a

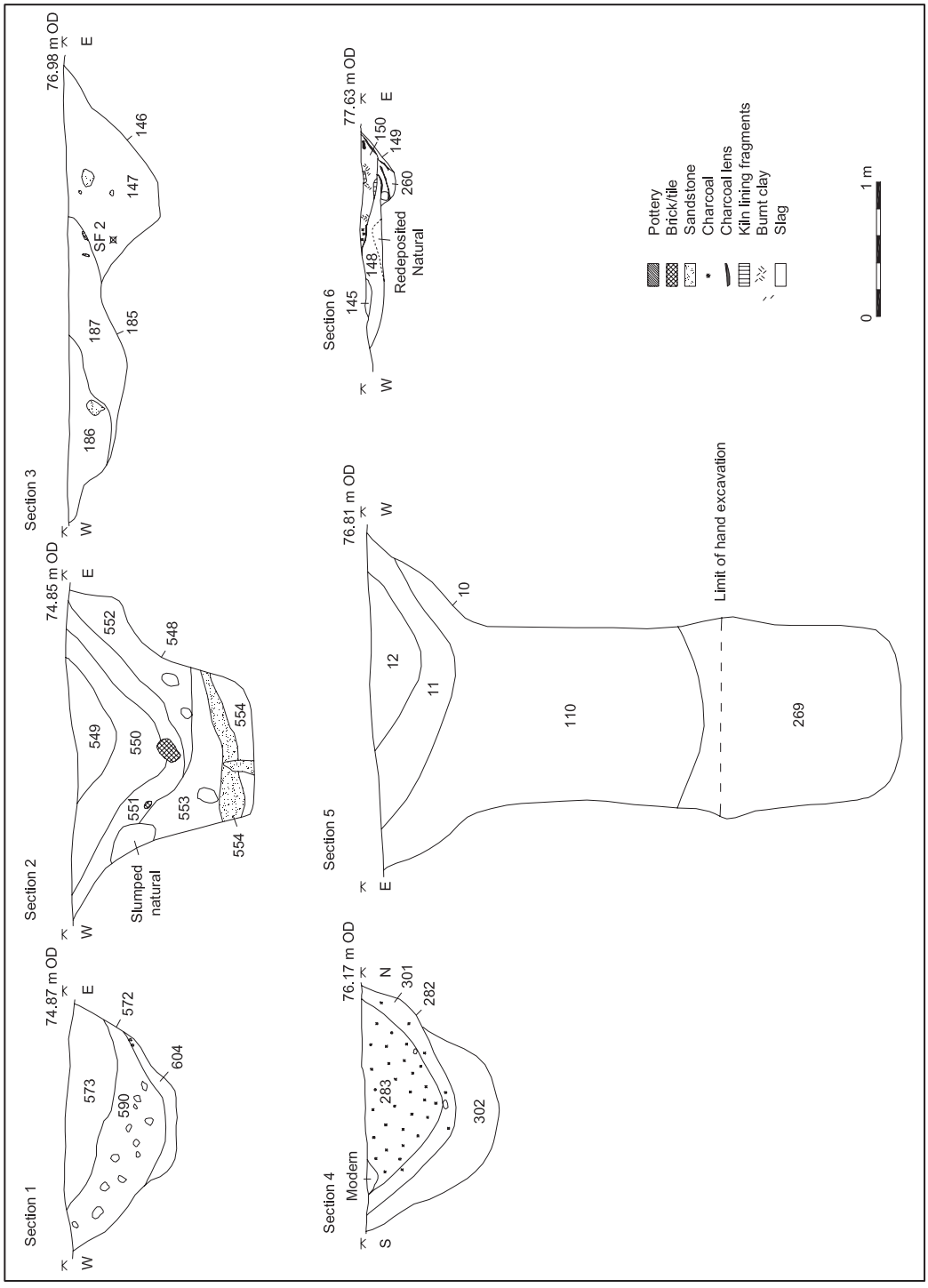

Fig. 10. Selected sections.

collection of insect remains.

Material recovered from environmental samples taken from the well suggests the deposition of industrial and domestic waste, as well as the use of the feature for the dumping of sewage, apparently soon after the cessation of use for drawing water. This interpretation is supported by the nature of the insect assemblage that suggests that the inclusion of waste began when the well was still wet. The similarity of the environmental material from fills [110] and [269] suggest that the feature was rapidly backfilled, with excrement-derived remains of apple (including fragments of core), bramble, sloe, cherry and fig present in both samples. A seed of caraway was also recovered from fill [110].

There was also a range of plant remains, both deliberately dumped 'industrial' waste such as flax, hemp, and wood chippings, and a range of taxa representing weeds and other plants which would have accumulated in the well from the surrounding area. The insect remains support the view of partial accumulation and partial deliberate dumping, including a small but significant group of beetles typically found in accumulations that develop inside a structure, again indicating the presence of buildings in the nearby vicinity although outside of the excavated area.

Phase 5: Post-medieval

There were remarkably few features dating from the post-medieval period. There had been widespread truncation from post-medieval buildings, notably in area A1 from brick-built domestic properties formerly fronting onto Robinson Road, and in area C2 from recently demolished industrial buildings, but there were few buried features containing material culture associated with their occupation.

A ditch running across area A1 contained nineteenth-century pottery and clay pipe [50] (Fig. 4). This feature partially truncated the top of the medieval well, [10]. There were also two shallow eighteenth- to nineteenth-century pits closer to the High Street ([284] and [307], Fig. 4). The other excavated post-medieval feature was a large, but shallow pit in area A2 from which eighteenth-century pottery was recovered ([179], Fig. 5).

Undated

There was a substantial number of excavated features in all of the excavation areas that did not contain datable material. The vast majority contained substantial quantities of ironworking slag, and given this fact, and the complete absence of pre-medieval features and paucity of large numbers of post-medieval features, it is presumed that most of these features were broadly medieval in date.

The ironworking hearths

Two ironworking hearths were encountered during the archaeological investigation of the site. The first example was recorded in Trench 34. It had been heavily truncated and survived as a deposit of *in-situ* baked clay [132] set in a shallow cut [130], with evidence of truncation/disturbance [117] and [131] (Fig. 9). Following on-site discussions, it was decided that the feature would be investigated at a later date, as part of the excavation phase, and this part of the site was subsequently included within area C2. Unfortunately, repeated flooding of this portion of the site made further investigation impossible. The feature appeared to represent the remains of a hearth of some kind, presumably associated with the smithing process, an argument given extra weight by the position of the working floor, [622] nearby; this arrangement is known from excavations elsewhere in town (Cooke 2001, 154, fig. 5).

The second hearth was located in area A2, and had survived to a far greater degree, allowing more detailed investigation (Fig. 5; Fig. 10, Section 6). There had been some disturbance in the vicinity, but the plan of the feature was easily discernible, given the presence of a 'halo' of natural clay baked to a reddish orange colour around the feature [148], which sat in a shallow hollow [149]. Part of the hearth lining survived in the western half of the feature [145], with a shallow deposit of charcoal and ash at the eastern end [150]. This overlaid another deposit apparently made up of debris from the hearth, which also contained small quantities of slag [260].

Examination of the feature showed that the baked 'halo' had partially cracked and buckled in antiquity, and that archaeomagnetic dating was likely to be unreliable. Given the absence of any direct dating evidence, the presence of residual Roman pottery in the vicinity, and the broad similarity of the profile of the features to that of Roman 'furnaces' recorded at Broadfield (Cartwright 1992, 32, fig. 7), it was decided to submit a sample of wood charcoal from [150] for

radiocarbon dating. This produced a measurement of 870±40 BP (Beta -198015, 1040–1260 cal. AD).

It was unfortunate that no associated features survived within the vicinity of the hearth, which appeared to be sited within a rectangular enclosure (Fig. 5). Interpretation of the exact function is also problematic, especially as both smelting and smithing slags were recovered from the lower fill of the feature [260], and there was evidence of ore-roasting debris, as well as oak charcoal in the environmental sample taken from the upper fill [150].

THE FINDS

THE POTTERY by Luke Barber

Introduction

The evaluation and subsequent excavations produced just under 3000 sherds of pottery, weighing *c.* 36.5 kg from 137 individually numbered contexts. The pottery on the whole is in good condition with most pieces showing no/little signs of wear on the edges indicative of post-depositional movement. Sherd sizes range from small to very large. Although there is a wide chronological range represented, the majority of the pottery spans the thirteenth to fifteenth centuries. Very small amounts of residual Roman pottery are present, together with the remains of one small Saxo-Norman cooking-pot and a small scattering of mainly later post-medieval material (eighteenth to nineteenth century). This report concentrates on the thirteenth- to fifteenth-century material in an attempt to develop further the ceramic series for the town; details of the other material is housed with the archive.

The medieval pottery was divided into fabric groups based on a visual examination of tempering, inclusions and manufacturing technique. After spot-dating all contexts a selection of the most informative groups were fully quantified by sherd count and weight. This information was recorded on pottery summary sheets which are housed with the archive. A quantification based on Estimated Vessel Equivalents (EVEs) was not undertaken owing to the small number of rim sherds involved.

The fabric groups

The fabric series in the current report is the same as that established in the excavations at the Old Post Office site (Barber 1997). Most of the fabric groups at that site are present from the current site, although a number of new fabrics has allowed the series to be extended both back into the twelfth and forward to the end of the fifteenth and beginning of the sixteenth centuries. Fabrics that have previously been described in detail (Barber 1997) are given only brief descriptions here though notes are added where new information has been forthcoming, particularly regarding date. New fabrics (marked *) are described in more detail. All fabrics have their West Sussex Fabric reference code in brackets after them.

Fabric 1 - Earlswood-type wares (Turner 1974)

Four variants of these generally oxidized (orange) wares were noted at the Old Post Office site. All are present in the current assemblage and an additional variant has been added.

Fabric 1a: (WS: Q/M4) Moderate/abundant medium/coarse sand. Mainly later thirteenth to mid-fourteenth century. Mainly cooking-pots. Catalogue Nos 5–7, 12–18 and 27.

Fabric 1b: (WS: Q/M5) Moderate fine/medium sand. Mainly later thirteenth to mid-fourteenth century. Mainly jugs. Catalogue Nos 19 and 36.

Fabric 1c: (WS: Q/M6) Moderate/abundant coarse sand. Mainly later thirteenth to mid-fourteenth century. Mainly cooking-pots. Catalogue No. 20.

Fabric 1d: (WS: Q(f)/M9) Sparse/moderate fine sand with common iron oxides. Mainly later thirteenth to mid-fourteenth century. Only jugs noted.

*Fabric 1e: (WS: Q(f)/M10) Sparse fine sand with common/abundant iron oxides. Mainly later thirteenth to mid-fourteenth century. Jugs, decorated with white slip under green glaze (as the other Earlswood jugs) are the most common form, though internally glazed cooking-pots are also present.

Fabric 2: (WS: Q(f)/M11)

Hard-fired sparse fine sand with larger sparse medium/coarse sand inclusions. Late fourteenth to fifteenth century, though some continuing into the early sixteenth century. Cooking-pots, storage jars and jugs/pitchers. Catalogue Nos 28-31.

Fabric 3 - Limpsfield-type wares (Prendergast 1974)

Three variants were noted at the Old Post Office site. All are present in the current assemblage. Although very similar to the Limpsfield wares, the lack of these products in Reigate (Williams 1983, 64), which is considerably closer to the production site, suggests that the Crawley material may have come from a more local kiln.

Fabric 3a: (WS: Q/M7) Moderate/abundant medium/coarse sandy greyware. Mid-thirteenth to mid-fourteenth century. Mainly cooking-pots. Catalogue Nos 8–10 and 21–2.

Fabric 3b: (WS: Q/M8) Moderate/abundant coarse sandy greyware. Mid-thirteenth to mid-fourteenth century. Mainly cooking-pots.

Fabric 3c: (WS: Q/M9) Moderate/abundant coarse sandy greyware. Mid-thirteenth to mid-fourteenth century. Mainly cooking-pots.

Fabric 4 - West Sussex-Type Ware (Barton 1979)

This group contained some variation at the Old Post Office site. As a result, the group has been subdivided for the current assemblage in order to isolate some of the variations. All could have come from the same set of kilns. Although appearing in the late thirteenth century, these well-fired fabrics appear to become common only in the fourteenth century, perhaps peaking toward the latter half of the century and undoubtedly continue at a lesser scale into the early/mid-fifteenth century.

*Fabric 4a: (WS: Q(f)/M12) Sparse very fine sand only. Usually grey in colour. Only jugs recognized.

Fabric 4b: (WS: Q(f)/M2) Sparse very fine to fine sand with rare quartz inclusions to 0.5 mm and black/grey iron oxides to 1 mm. Usually grey, though sometimes with dull orange internal surfaces. Only jugs recognized. This is the most common type and undoubtedly accounted for

the majority of Fabric 4 at the Post Office site. Catalogue Nos 24–5.

*Fabric 4c: (WS: Q(f)/M13) Sparse to moderate very fine to fine sand with sparse quartz to 0.3 mm. Usually grey though occasionally with buff internal surfaces. Only jugs recognized. A coarser variant than 4b.

Fabric 5 - (WS: Q/M10) Coarse Borderware (Pearce & Vince 1988, 9)
Off-white to beige ware tempered with abundant milky and pinkish quartz sand to 1 mm. In London, although this fabric begins in the late thirteenth century, it does not become common until the mid-fourteenth century. The current assemblage agrees with this, suggesting that it starts to increase at the expense of the Earlswood products after 1350 and continues into the fifteenth century. Interestingly, the sooted base of a Coarse Borderware cooking-pot from Context 369 still has a small piece of another internally-glazed cooking-pot adhering to it, clearly demonstrating the use of 'seconds' at the site. Catalogue Nos 26, 32, 33, 37–8.

Fabric 6 - (WS: C+f/M3)
Chalk and sand-tempered ware with rare flint and iron oxide inclusions to 1 mm. Only one small sherd of this fabric was present at the Old Post Office site (the voids were thought to be shell). Cooking-pots were noted, some with spots of external glaze. A twelfth- to possibly early-thirteenth-century date is suggested, based on rim forms. Catalogue No. 1.

Fabric 7 - (WS: Q/M11)
Hard-fired fabric tempered with moderate/abundant fine/medium sand and sparse/moderate grey/black iron oxides. Cooking-pots and jugs are present, the latter sometimes with white slip under green glaze. This is possibly a 'West Sussex Ware' copy of Earlswood-type decoration. A fourteenth-century date seems probable.

Fabric 8 - Hard-fired late medieval sandy wares
The Old Post Office fabric 8 has been subdivided into three closely related fabric variations which probably belong to the later fourteenth to fifteenth centuries with Fabric 8c probably extending into the early part of the sixteenth century.

Fabric 8a: (WS: Q/M12) Sparse/moderate fine/medium sand and rare iron oxides. Hard-fired and usually oxidized (orange/buff/dark brown). Cooking-pots and jugs/pitchers.

*Fabric 8b: (WS: Q(f)/M16) Sparse/moderate very fine/fine sand with rare/sparse iron oxides and quartz inclusions to 0.5mm. Only cooking-pots recognized.

*Fabric 8c: (WS: Q(f)/M17) Sparse very fine sand with rare quartz inclusions to 0.4 mm. A very high-fired 'ringing' fabric, frequently with knife-trimmed bases but rare glazing (usually thin patches or spots). Only cooking-pots were recognized. Catalogue Nos 34–5.

Fabric 9 - (WS: S/M1)
Abundant calcareous tempering (shell/chalk showing as ovoid and platey voids) with no sand. A soft corky fabric. Only cooking-pots seen. Only one sherd of this was located at the Old Post Office site. Later eleventh to twelfth century, possibly into very early thirteenth century. Catalogue Nos 11 and 23.

**Fabric 10 - (WS: F+s/M5)*
Sparse/moderate flint (to 3 mm) and coarse sand with rare/sparse shell (platey voids). Usually oxidized dull orange. Only cooking-pots seen. Twelfth to early thirteenth century. Cat. No. 3 (Fabric group 10 was originally used at the Old Post Office site for French imported material, but no such pieces were present in the current assemblage).

**Fabric 11 - (WS: Q+c?/M2)*
Moderate/abundant medium sand and rare chalk/shell (ovoid and platey voids) to 3 mm. Both oxidized dull orange and reduced grey. Only cooking-pots seen. Later twelfth to mid/late thirteenth century. Such fabrics are common in the Weald where they dominate certain areas during the thirteenth century.

**Fabric 12 - (WS: Q/M13)*
Moderate/abundant medium sand (some larger quartz inclusions). A mixed group of oxidized/reduced medium-fired sand-tempered wares. Only cooking-pots and jugs seen. Thirteenth to mid-fourteenth century.

**Fabric 13 - (WS: Q/M14)*
Abundant coarse sand with some rounded quartz inclusions to 3mm. Usually oxidized dull orange. Cooking-pots and less commonly jugs. Mid/late twelfth to thirteenth century. Catalogue No. 4.

**Fabric 14 - (WS: Q+s/M3)*
Moderate/abundant coarse sand with rare/sparse shell (platy voids) to 3 mm. Both oxidized dull orange and reduced grey. Only cooking-pots seen. Early twelfth to mid-thirteenth century. Catalogue No. 2.

**Fabric 15 - (WS: Q(f)/M19)*
Moderate very fine/fine sand with very rare black iron oxide inclusions to 1 mm and quartz inclusions to 0.4 mm. Both oxidized dull orange and reduced grey. Only jugs seen. A lower-fired predecessor to true West Sussex Ware? Thirteenth century.

**Fabric 16 - (WS: Q/M15)*
Abundant medium sand with rare quartz to 2 mm. Both oxidized dull orange and reduced grey. Only jugs seen. A coarser version of the lower-fired Fabric 15. Thirteenth century.

**Fabric 17 - (WS: Q(f)/M18)*
Sparse/moderate very fine sand with very rare black iron oxides to 0.3 mm and a sparse gold mica visible on surfaces. A hard-fired, oxidized orange fabric. Possibly Iberian micaceous ware (Hurst *et al.* 1986, 69). Late fourteenth to fifteenth/early sixteenth century.

**Fabric 18 - (WS: Q(f)/M14) Surrey Whiteware*
Sparse/moderate very fine sand with sparse quartz inclusions to 1.5mm and very rare iron oxides to 1 mm. An off-white to beige medium-fired fabric. A finer version of Coarse Borderware (Fabric 5), possibly Cheam (Pearce & Vince 1988). Only jugs, with patchy green glaze noted. Probably fourteenth to fifteenth century. Catalogue Nos 39–42.

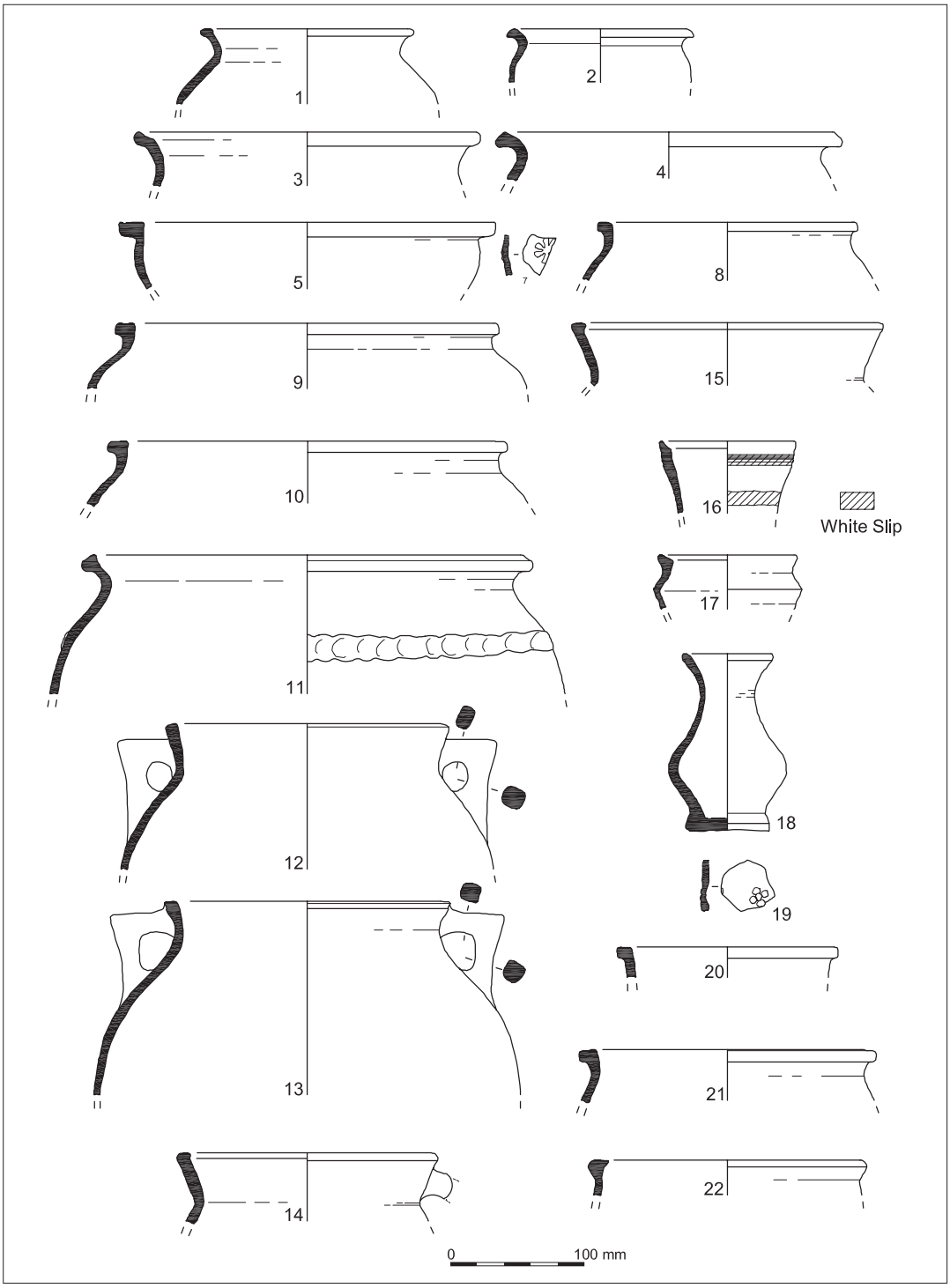

Fig. 11. Pottery.

**Fabric 19 - (WS: Q(f)/M15) Surrey Whiteware*
Moderate very fine, fine and medium sand with sparse iron oxides to 1.2 mm. An off-white to beige medium-fired fabric. (Pearce & Vince 1988). Cooking-pots (internal green glaze on base) and ?jugs. Probably fourteenth to fifteenth century.

**Fabric 20 - (WS: UWW/M1) Surrey Whiteware*
No visible inclusions in this medium-fired 'powdery' whiteware. Jugs and cups present with thin to thick, bright green glaze. Early Tudor Green type. (Pearce & Vince 1988). Probably fifteenth century.

**Fabric 21 - (WS: F/AS4)*
Common calcined flint to 2 mm, rare medium sand and iron oxide inclusions to 4 mm. A low-fired hand-made fabric which is similar to later prehistoric types. However, part of a flaring rim of a cooking-pot is present from Context 5 (evaluation) suggesting a Saxo-Norman date. Patchily fired black to brown.

The pottery groups

A number of groups from the site give a fairly good sequence of the ceramics in the town, when put in chronological order.

Group 1: Pit [250] (Fill [251])
This small group is, with the exception of the Saxo-Norman cooking pot from [5] of the evaluation, the earliest excavated at the site. Although the numbers are too small for a meaningful comparison of fabric ratios, this group clearly shows the range of early fabrics. The chalk- and sand-tempered Fabric 6 is all from one cooking-pot, which admittedly may have been quite old, but was nevertheless still in use. The Fabric 13 material is all from one coarse sandy jug, though at least one finer jug is represented by the Fabric 15 material. A later twelfth- to early-thirteenth-century date is suggested.

Table 1. Pottery from Pit [250], Fill [251] (average sherd size 5.4 g).

Fabric	No. of sherds	%	Weight	%
6	46	56.8	199 g	45.1
12	1	1.2	11 g	2.5
13	28	34.6	197 g	44.7
14	3	3.7	24 g	5.4
15	3	3.7	10 g	2.7
Totals	*81*	100	441 g	100.4

Catalogue (Fig. 11)
1. Cooking-pot with dark grey/black core, light brown grey inner and mid-grey/dull brown patchy outer surfaces. Fabric 6.

2. Cooking-pot with dark grey/black core, light brown inner and black outer surfaces. Fabric 14.

Group 2: Gully [292] (Fill[293])
As with the group from pit [250] the fabric ratios are not reliable owing both to the small group size and to the presence of one fragmented cooking-pot (Fabric 10 sherds). Although there is no Fabric 6, a number of sherds of the shell/calcareous-tempered ware (Fabric 9) are present though these could be residual. Although there are early fabrics present, the forms, together with a greater proportion of sandy jugs (Fabrics 12, 13 (part) and 16) suggest a later date, perhaps in the first half of the thirteenth century. A number of sherds are burnt.

Table 2. Pottery from Gully [292], Fill [293] (average sherd size 7.7 g).

Fabric	No. of sherds	%	Weight	%
9	5	7.1	20 g	3.7
10	39	55.7	277 g	51.5
12	1	1.4	7 g	1.3
13	21	30	211 g	39.2
16	4	5.7	23 g	4.3
Totals	*70*	*99.9*	*538 g*	*100*

Catalogue (Fig. 11)
3. Cooking-pot with hollowed rim. Light grey core and inner surfaces. Dull orange outer surface. Fabric 10.

4. Cooking-pot with grey core, dull orange surfaces with black patches. Burnt post-breakage. Fabric 13.

Group 3: Pit [572] (Fill [590])
The earliest material in this group consists of 43 sherds in Fabric 9 from a cooking-pot/storage jar which is likely to have been an old vessel when discarded, and a single, possibly residual sherd of Fabric 13. Excluding these, the group is dominated by Earlswood (F1a–d), and to a lesser extent, Limpsfield-type (F3a-b) products. This, along with the presence of a little West Sussex Ware (F4c) suggests a date of *c.* 1250/75 to 1325. There were conjoining sherds between this fill and that below (*see* Context 573).

Table 3. Pottery from Pit [572], Fill [590] (average sherd size 20.5 g).

Fabric	No. of sherds	%	Weight	%
1a	5	5.3	216 g	11.1
1b	23	24.2	574 g	29.5
1c	1	1.1	16 g	0.8
1d	5	5.3	36 g	1.8
3a	14	14.8	212 g	10.9
3b	1	1.1	13 g	0.7
4c	2	2.1	93 g	4.8
9	43	45.3	702 g	36.1
13	1	1.1	85 g	4.4
Totals	*95*	*100.3*	*1947 g*	*100.1*

Catalogue (Fig. 11)
5. Bowl with squared rim. Buff core with dull orange surfaces. External sooting. Fabric 1a.

6. NOT ILLUSTRATED. Cauldron with triangular handle. Possibly same vessel as in Context 573 (*see* below No. 12). Fabric 1a.

7. Decorated jug bodysherd (probably from same jug as Cat. No. 19). Rosette stamp with white external slip under tin and patchy yellow-brown glaze. Abraded. Fabric 1a.

8. Cooking-pot with squared rim. Mid-grey throughout. Fabric 3a.

9. Cooking-pot with squared rim. Mid/dark grey core with mid-grey surfaces with occasional buff patches. Fabric 3a.

10. Cooking-pot with squared rim. Mid/dark grey core with mid-grey surfaces. Fabric 3a.

11. Large cooking-pot with beaded, out-turned rim and very crude low applied and thumbed strip. Probably an old earlier thirteenth-century vessel. Mid-grey core and dull orange surfaces. Exterior sooted. Fabric 9. A similar vessel from Dorking (Jones 1998a, Fig. 3.9, No. 99) was of uncertain date; however, vessels such as this are quite common in Canterbury and on Romney Marsh where they are dated to the twelfth to first half of the thirteenth century (Barber forthcoming).

Group 4: Pit [572] (Fill [573])
This group has a similar range of fabrics to that of the other fill in the same pit (Context [590]) to which there are several cross-joins. The group is totally dominated by the Earlswood fabrics, particularly F1a. There is a scatter of Limpsfield-type ware but, as with [590], virtually no West Sussex Ware. The F9, F11, F13 and F15 material is probably residual. The heavy bias toward fabric F1a may be due to the presence of the remains of at least four different cauldrons in the group in this fabric. The large number of these vessels is unusual. Despite this, jugs are also represented by all the sherds in F1b, F1d (at least two) and at least one in F1e. A date similar to that of fill 590 is likely, however, the current group may be very slightly later. A date of *c.* 1275–1325 is suggested based on the lack of West Sussex Ware.

Table 4. Pottery from Pit 572, Fill 573 (average sherd size 19.4 g).

Fabric	No. of sherds	%	Weight	%
1a	106	45.7	2339 g	52.1
1b	19	8.2	185 g	4.1
1c	7	3	60 g	1.3
1d	21	9.1	324 g	7.2
1e	29	12.5	1038 g	23.1
3a	20	8.6	251 g	5.6
3b	4	1.7	51 g	1.1
3c	1	0.4	8 g	0.2
4c	3	1.3	13 g	0.3
9	6	2.6	78 g	1.7
11	2	0.9	22 g	0.5
12	9	3.9	75 g	1.7
13	4	1.7	46 g	1
15	1	0.4	2 g	0.04
Totals	*232*	*100*	*4492*	*99.94*

Catalogue (Figs 11 & 12)

12. Two-handled cauldron with flaring rim. Light grey core with dull orange surfaces. The angular shaped handle mimics cast metal vessels. Sooting on handle. Fabric 1a.

13. Two-handled cauldron with curving rim. Buff core with pale orange surfaces. Sooting on exterior and handle. Fabric 1a.

14. Two-handled cauldron with flaring rim with internal bead. Light grey/dull orange core with dull orange surfaces. Only the stub of one of the round-sectioned handles remains. Sooting on exterior. Fabric 1a.

15. Cauldron with flaring rim. Red orange core with pale orange surfaces. Spots and dribbles of clear glaze on exterior. Fabric 1a.

16. Jug with mid-grey/orange core and dull orange surfaces. Horizontal rilling near rim and two horizontal bands of white slip below a sparse dull brown glaze. Fabric 1a.

17. Jug with carinated neck. Dull orange with grey core in thicker area of rim. White slip on interior of neck and externally, under a mottled bright green glaze. Fabric 1a.

18. Small bottle. Dull red orange core with dull orange surfaces. Wheel marks on base. Fabric 1a.

19. Decorated jug bodysherd. 'Raspberry' stamp (pushed into mould from interior of vessel). Red orange throughout. Exterior white slip under a sparse (eroded) yellow brown glaze. Fabric 1b.

20. Cooking-pot with squared rim. Light grey core and dull orange surfaces. Fabric 1c.

21. Cooking-pot with squared rim. Mid-grey core and surfaces. Some external sooting. Fabric 3a.

22. Cooking-pot with undercut rim. Mid-grey core with light grey surfaces. Fabric 3a.

23. Cooking-pot with undercut out-turned rim. Dark grey core with red orange surfaces. Fabric 9. Probably residual.

Group 5: Well [10] (Fills [269] and [110])
The small group from the lower fill, [269], is totally dominated by a near complete West Sussex Ware jug (F4b), though Earlswood and Limpsfield-type products are also present. A date of 1300–1400 is suggested.

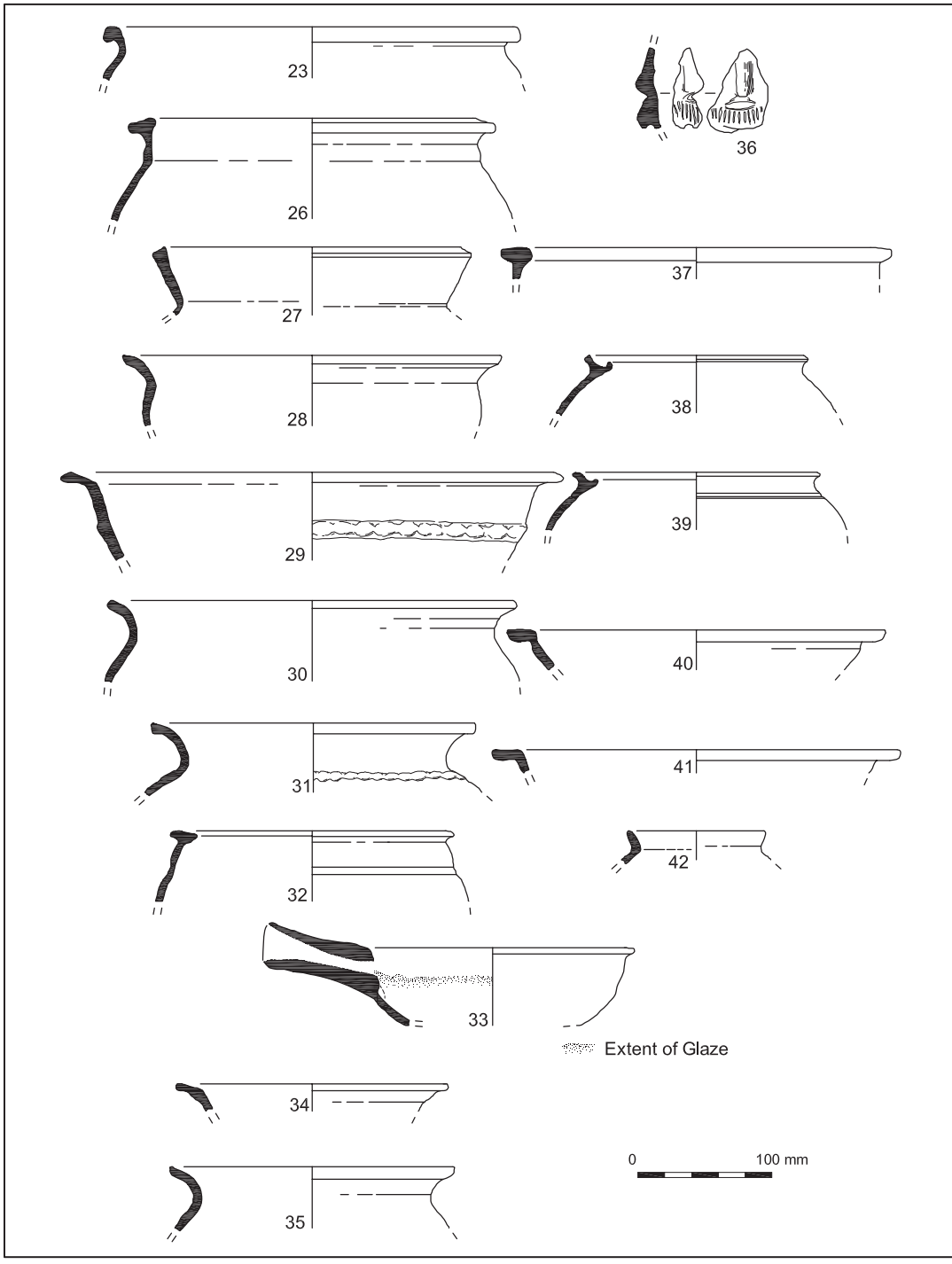

Fig. 12. Pottery.

Table 5. Pottery from Well [10], Fills [269] and [110] (Average sherd size 35.7 g and 34.8 g respectively).

	Fill 269			
Fabric	**No. of sherds**	**%**	**Weight**	**%**
1a	3	6.1	34 g	1.9
1b	3	6.1	50 g	2.9
1d	3	6.1	11 g	0.6
3a	2	4.1	29 g	1.7
4b	28	57.1	1479 g	85
4c	7	14.3	114 g	6.5
5	-	-	-	-
8	1	2	22 g	1.3
8b	-	-	-	-
8c	1	2	6 g	0.3
11	-	-	-	-
13	1	2	3 g	0.2
C19th flower pot	-	-	-	-
Totals	*49*	*99.8*	*1748 g*	*100.4*
	Fill 110			
Fabric	**No. of sherds**	**%**	**Weight**	**%**
1a	-	-	-	-
1b	-	-	-	-
1d	-	-	-	-
3a	-	-	-	-
4b	33	67.3	1334 g	78.3
4c	-	-	-	-
5	13	26.5	342 g	20.1
8	-	-	-	-
8b	1	2	10 g	0.6
8c	-	-	-	-
11	1	2	13 g	0.8
13	-	-	-	-
C19th flower pot	1	2	4 g	0.2
Totals	*49*	*99.8*	*1703 g*	*100*

Catalogue (Fig. 13)

24. Virtually complete full-bodied squat jug with anthropomorphic decoration, stabbed rod handle and thumbed base (23 sherds weighing 1384 g). Fabric 4b. Mid-grey core with buff inner and outer surfaces. Exterior glazed bright mid-green with black/dark mottles and patches, especially near the girth. The lower third of the body only has spots and splashes of glaze. The underside of the base also has some glaze spots. Traces of white slip on interior of neck. The face mask is formed from a mixture of applied clay (nose and ears) and the main body of the pot being pushed outward from the inside (chin). The eyes and mouth are formed from incised circles. The arms and hands are composed of applied clay with incised lines. On the front belly of the pot is a circular 'buckle' formed from applied clay with (originally) six triangular 'peaks'. There is a low horizontal strip of applied clay running across the centre of the buckle. Five (originally six or seven) applied bosses, stamped with a simple cross design, are arranged around and within the apron. Four larger applied bosses, stamped with six radiating spokes and pellets, are situated in the angle of the arms and either side of the rod handle. A standard West Sussex Ware type with similarities to one from Pulborough (Barton 1979, 110, no. 1) Context 269.

The group from the upper fill [110] is identical in size and general structure: it is dominated by the large part of a West Sussex Ware decorated jug. However, although the small size of the group makes it difficult to be certain, the total absence of Earlswood and Limpsfield-type products and the presence of Coarse Borderware (F5) suggests that this group may have been deposited at a slightly later date than that of 269. As such, a 1350–1450 date is suggested, though both could easily have been deposited around the middle of the fourteenth century (1350–1375).

Catalogue (Fig. 13)

25. Virtually complete full-bodied squat decorated jug with stabbed rod handle and thumbed base (33 sherds weighing 1334 g). Fabric 4b. Light grey core with dull orange surfaces. Decorated with applied diagonal curved strips of thick brown slip (two sets of four either side of the frontal decoration). A further set of three shorter curving diagonal strips are present at the base of the handle. The frontal decoration consists of a roundel of thick brown slip with further cross pattern within. Over the roundel are at least 17 applied brown clay pellets which have crude rosette stamping on them. Interestingly, there are traces of another roundel (from a separate vessel) sticking to the jug's body. The whole is covered by a dull green exterior glaze which peters out before the thumbing of the base. The curving strips and knife stabbed rod handle are similar to those of a previously published West Sussex Ware anthropomorphic jug (Barton 1979, 114). [110].

Catalogue (Fig. 12)

26. Cooking-pot with wide rim. Light grey core with off-white surfaces. Spots and dribbles of green glaze on interior rim and sides. Extensive exterior sooting. Fabric 5.

Group 6: Pit [282] (Fill [283])

This group is by far the largest from the site. However, it contains quite a high residual element (up to 32.8% by count, but 25.5% by weight, reflecting the more fragmented nature of the residual sherds) as well as a small intrusive post-medieval element (1% by count and 0.5% by weight). Taking away this material, the group is dominated by West Sussex ware (F4a-c) and the higher-fired fine transitional ware (F2), together with a scatter of Coarse Borderware (F5) and high-fired earthenwares (Fabrics 7 and 8). The F2 sherds come from a minimum of five different vessels (two cooking-pots, two wide bowls and a pitcher). Similar wares and forms have been ascribed a late fifteenth- to sixteenth-century date in Surrey (Jones 1998b). Although these wares undoubtedly continue in the sixteenth century, the presence of much unabraded West Sussex Ware in this group (at least seven different jugs including one with anthropomorphic decoration) suggests a slightly earlier date in this instance. As such, this group is thought to date to the end of the fourteenth, or more probably mid-fifteenth century.

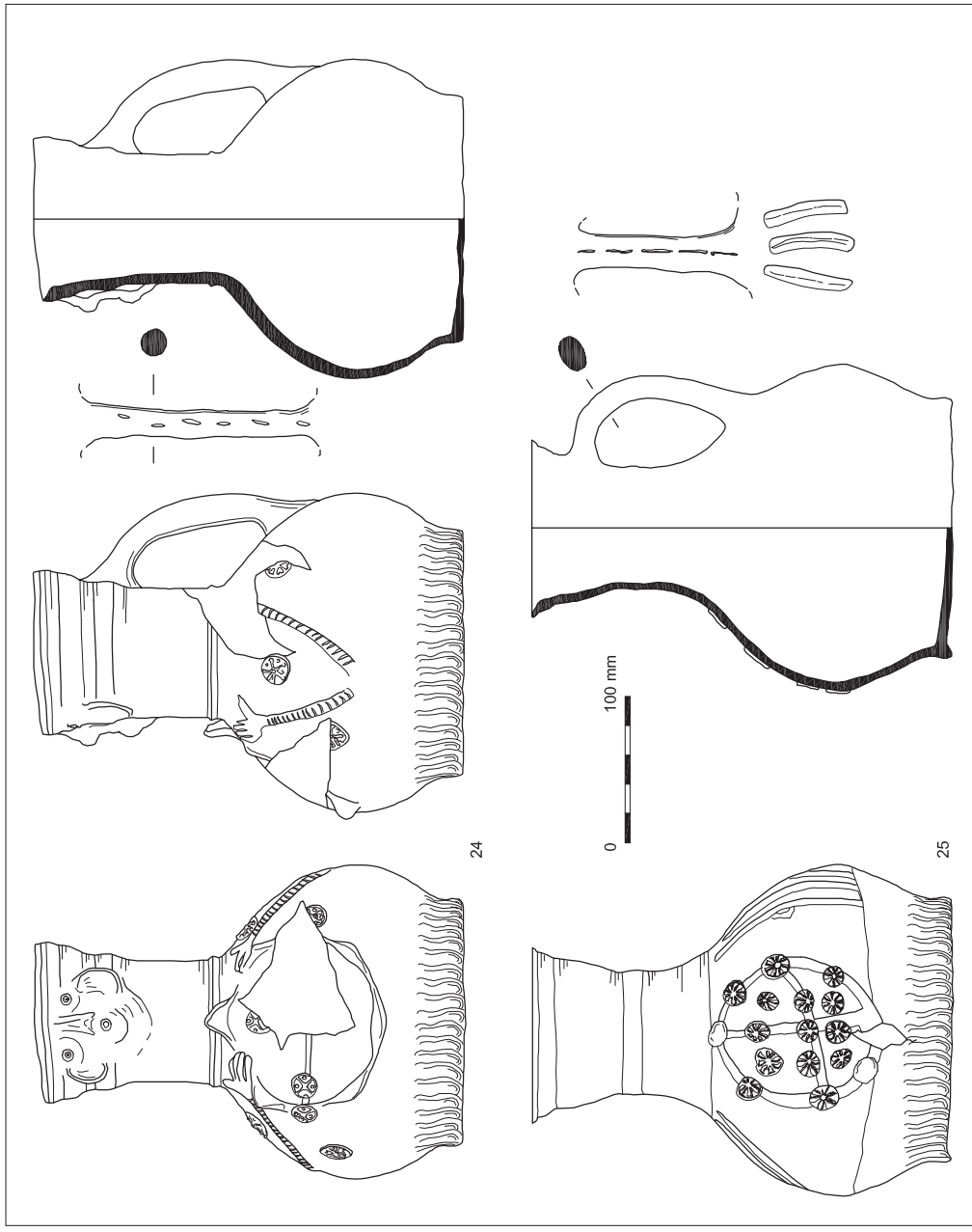

Fig. 13. Pottery.

Table 6. Pottery from Pit [282], Fill [283] (average sherd size 11.4) *probably residual; + intrusive.

Fabric	No. of sherds	%	Weight	%
***Roman**	17	2.9	63 g	0.9
***1a**	71	12.2	832 g	12.5
***1b**	20	3.4	87 g	1.3
***1c**	1	0.2	7 g	0.1
***1d**	7	1.2	54 g	0.8
2	206	35.3	2571 g	38.5
***3a**	18	3.1	185 g	2.8
***3b**	8	1.4	102 g	1.5
***3c**	12	2.1	155 g	2.3
4a	22	3.8	105 g	1.6
4b	59	10.1	1009 g	15.1
4c	13	2.2	139 g	2.1
5	29	5	354 g	5.3
7	25	4.3	249 g	3.7
8	4	0.7	48 g	0.7
8b	1	0.2	2 g	0.02
8c	12	2.1	198 g	3
10	3	0.5	96 g	1.4
11	12	2.1	161 g	2.4
***12**	37	6.3	218 g	3.3
+PM HFE	3	0.5	23 g	0.3
+PM Creamware	3	0.5	13 g	0.2
Totals	*583*	*100.1*	*6671 g*	*99.82*

Catalogue (Fig. 12)

27. Flaring rim, possibly from a cauldron or pipkin. Brick red core with dark grey reduced surfaces. Possibly residual. Fabric 1a.

28. Bowl with flaring rim. Light grey core, dull orange inner and light brown outer surfaces. Spots of clear internal glaze. Exterior sooted. Fabric 2.

29. Large bowl with flaring rim and shallow applied thumbed strip. Light grey core with dull orange surfaces. Fabric 2.

30. Cooking-pot with flaring rim. Light grey core, dull orange/buff surfaces. Fabric 2.

31. Cooking-pot with flaring rim and crude and shallow applied thumbed strip on shoulder. Light grey core, dull orange/buff surfaces. Fabric 2.

32. Cooking-pot with hammer-headed rim. Off-white throughout. Fabric 5.

33. Skillet with tubular handle. Off-white/cream with light grey surfaces. Even green glaze on interior base and side walls. Sooted exterior. Fabric 5.

34. Bowl with simple angled flaring rim. Light grey core with dull orange surfaces. Fabric 8c.

35. Cooking-pot with flaring rim. Light grey core and dull orange/brown surfaces. Fabric 8c.

Group 7: Pit [492] (Fill [493])

This group is somewhat unusual in that it is totally dominated by Surrey whitewares (Fabrics 5, 18, 19 and 20) which together constitute 80% of the group by sherd count (75.6% by weight). The presence of the Coarse Borderware would suggest a date probably after 1350, however, there is a notable lack of West Sussex Ware and the transitional Fabric 2. The exact dating of this group and its placement in the sequence represented by the other pottery groups remains problematic. A fifteenth-century date is suggested, perhaps in the first 50 years, with the odd nature of the assemblage more the result of personal preference of the original owners for the whitewares rather than the West Sussex products.

Table 7. Pottery from Pit [492], Fill [493] (average sherd size 8.8).

Fabric	No. of sherds	%	Weight	%
1a	10	4.1	53 g	2.5
1b	1	0.4	32 g	1.5
1d	5	2	13 g	0.6
2	2	0.8	8 g	0.4
3a	7	2.9	41 g	1.9
3b	1	0.4	10 g	0.5
4c	2	0.8	22 g	1
5	18	7.4	204 g	9.5
8	1	0.4	20 g	0.9
8c	3	1.2	32 g	1.5
12	16	6.6	284 g	13.2
15	1	0.4	14 g	0.6
18	160	65.6	1270 g	59
19	8	3.3	120 g	5.6
20	9	3.7	33 g	1.5
Totals	*244*	*100*	*2156 g*	*100.2*

Catalogue (Fig. 12)

36. Part of face from a naturalistic anthropomorphic jug. Moulded nose, mouth and beard. Bright orange throughout. Exterior white slip under a dark green glaze. Although this appears to be an Earlswood product, it closely resembles a Kingston-type ware jug (Pearce and Vince 1988, Fig. 63, No. 65) from which it may have been copied. Fabric 1b.

37. Cooking-pot with hammer-headed rim. Light grey core, off-white surfaces. Fabric 5.

38. Lid-seated cooking-pot. Pale orange core, off-white surfaces. Fabric 5.

39. Lid-seated cooking-pot. Pale orange core, off-white surfaces. Fabric 18.

40. Bowl with horizontal rim. Pale grey core, buff/pinkish surfaces. Fabric 18.

41. Bowl with horizontal rim. Pale grey core, buff/pinkish surfaces. Fabric 18.

42. Pitcher with simple rim. Light grey core, buff/pinkish surfaces. Fabric 18.

Discussion

The majority of the medieval pottery from the site is of mid-thirteenth- to fifteenth-century date. Earlier material relates to some twelfth- and earlier thirteenth-century activity, but judging from the quantity of pottery involved this was never on a large scale. This pattern is similar to that of other sites so far investigated in the town (Barber 1997; Timby 1998; Mepham 2001) and together they point to an upsurge in activity in the second half of the thirteenth century, presumably associated with ironworking. The main pottery sequence appears to stop toward the end of the fifteenth century and could relate to the introduction of the blast furnace which caused the iron industry to disperse in search of suitable sites for water power and thus removed much activity from the town. Fabric 2 material from the present site is thought to be of fifteenth-century date, but it almost certainly continued into the sixteenth century, as has been noted in Surrey (Jones 1998b). However, the absence of any German stonewares in the assemblage, despite the land-locked isolated nature of the town, strongly suggests the present assemblage does not run significantly into the sixteenth century. Later activity is on a very small scale and appears to be of eighteenth- to nineteenth-century date.

The current assemblage has allowed refinement and expansion of the ceramic sequence originally established for the town (Barber 1997), albeit tentative in places (Table 8). Although only a small quantity of twelfth- to earlier thirteenth-century material is present, it has greatly increased the range of early fabrics known and has, up to a point, allowed some refinement of the later ceramic chronology. What is interesting about the earlier material is the mix of what might be considered twelfth- century fabrics, in relatively unabraded condition, with assemblages which obviously sit firmly in the thirteenth century and even then, sometimes toward the end of that century (e.g. Cat. No. 23). Either certain individual vessels have an extended period of use or some of these fabrics run later than one might expect. Although this is an observation also made in the Relief Road assemblage (Timby 1998, 90) more early (twelfth to mid-thirteenth-century) groups will be required from the town to test this. Equally, the ceramics in the town in the sixteenth and seventeenth centuries are notably lacking and it is hoped that future excavations will rectify this situation. Assemblages from the sixteenth century will be particularly important as they will allow the transition from the late medieval to early post-medieval to be better understood.

The current assemblage has confirmed the dominance of Surrey-type pottery in the town throughout the later thirteenth to fifteenth centuries. The Earlswood and Limpsfield-type wares appear to dominate from around the mid-thirteenth to mid-fourteenth centuries but with increasing quantities of West Sussex Wares in the fourteenth and probably first half of the fifteenth centuries. At the same time there is a shift in the source of Surrey pottery with the increase in the supply of Coarse Borderware and other Surrey whitewares, apparently at the expense of the Earlswood and Limpsfield-type industries. Quite why this change occurred is uncertain, as is the exact termination date of the supply from

Table 8. Suggested date ranges for medieval fabrics.

	1100	1150	1200	1250	1300	1350	1400	1450	1500
F21: Flint	-- -								
F9: shell/chalk	---------- - - -								
F6: chalk and sand with flint	- - - ---------- - - -								
F14: Coarse sand & sparse shell	- - ---------- - - -								
F10: sand & shell	- - - - - ---------- - - -								
F13: Coarse sand		- - - ---------- - - -							
F11: sand &rare chalk/shell			- - ---------- -						
F12: Medium sand			- - - - ---------- - - -						
F15: Early West Sussex Ware			- - - ---------- - -						
F16: Early West Sussex Ware			- - - ---------- - -						
Limpsfield-type (F3)				- - - ---------- -					
Earlswood-type (F1)				- ---------- - - -					
West Sussex Ware (F4)					- - - - ---------- - - - - - -				
F7: hard-fired sand					- - - - ---------- - - -				
Coarse Borderware (F5)						- - - ---------- - - - -			
F2: hard-fired fine sand/silty						- - - - -- ----------			
F8: hard-fired late med. sandy						- - - ----------			
F17: Iberian?							- - - - - ----------		
F18: Surrey whiteware							- - - ----------		
F19: Surrey whiteware							- ----------		
F20: Early Tudor Green								- - - - ----------	

these sources. The Fabric-2 wares, which are most common in the fifteenth-century assemblages, may also be from a Surrey source as similar vessels are quite common in that county (Jones 1998b).

The isolated nature of the site makes the assessment of 'social status' difficult as, unsurprisingly given its location, very few medieval imports appear to have reached the town. Added to this, the generally unvarying good quality of the Surrey and West Sussex ware products during the high medieval period does not allow distinction within the locally available wares. The presence of a jug with a slight defect (Cat. No. 23) and a Coarse Borderware cooking-pot base with the remains from another stuck to it (Context [369]) suggests the use of 'seconds', but far more material would be needed to be certain if this was a general characteristic of the town.

THE CERAMIC BUILDING MATERIAL

by Samantha Crawt

The archaeological investigations produced 178 pieces of brick and tile weighing approximately 11.5 kg from 37 individually numbered contexts. The majority of the material consists of roofing tile, in total 171 pieces weighing just over 11 kg in seven different sand-tempered fabrics. The assemblage was recovered from contexts spanning the thirteenth to eighteenth centuries with the largest concentration dating to the late thirteenth to early fifteenth centuries. A complete list of all the ceramic building material by context and fabric, with fabric samples, forms part of the archive.

The tile assemblage is best discussed in two groups. The first and earliest group dates from the late thirteenth to the mid-fourteenth century. A total of 122 pieces of predominantly peg-tile weighing just over 7.5 kg was found, from a variety of contexts including pits and ditches. One small piece of floor tile (fabric 4) and one bonnet tile (fabric 1) were also identified. Six out of the seven fabric types are represented; the most common of these is fabric 1 with 111 pieces weighing approximately 7 kg (*see* Table 9). The majority of this material was located within area C2. Pit [548], produced the largest group: 106 pieces, weighing almost 7 kg and a small amount was also collected from the eastern corner of the area. This probably indicates the discrete disposal of building material in a specific event though where the material originated from is uncertain.

The later group dates to the late fourteenth to fifteenth centuries and is notably smaller. A total of 48 pieces weighing approximately 3 kg was collected from a number of contexts. Peg-tile is the most frequent, but one fragment of ridge tile was also identified. Six of the seven fabric types are evident. Fabric 6 is first identified in this period, which may suggest that this is a new type. Fabrics 1, 2, 3, 4 and 7, all present in the earlier group, still appear to have been in use, although they may be residual. Ditch [146] in areas A1/2, produced a small concentration of tile. This is probably the result of indiscriminate dispersal over a number of years and not evidence of any definite building location. No tile was found in areas B1 and C1.

A total of seven bricks, weighing 638 g, was collected from six contexts. All appear to be post-medieval in date, with one ?nineteenth-century intrusive refractory brick from context [327] and a vitrified brick from Context [287].

Table 9. Characterization of tile assemblage.

Fabric type	late C13th–Mid 14th	late C14th–E15th	C15th	Post C15th
	no/g			
F1 Medium-fired. abundant medium sand temper with occasional iron oxides to 2 mm	111/7106 g	18/836 g	9/588 g	-
F2 Medium-fired. Moderate course sand temper with rare iron oxides to 3 mm	2/44 g	3/107 g	-	-
F3 Medium-fired. Moderate medium sand temper with occasional iron oxides to 4mm and calcareous inclusions to 2.5 mm	4/408 g	13/1452 g	1/14 g	-
F4 Medium-fired. Moderate fine sand temper with rare iron oxides to 6 mm	2/164 g	1/32 g	-	-
F5 Hard-fired. Abundant fine sand temper with very rare iron oxides to 1 mm and very rare calcareous inclusions to 1 mm	2/70 g (intrusive?)	-	-	1/42 g
F6 Hard-fired. Moderate coarse sand temper with occasional iron oxides to 3.5 mm and very rare calcareous inclusions to 2 mm	-	1/18g	1/98 g	-
F7 Medium-fired. Medium coarse sand temper with very rare iron oxides to 5 mm in a yellow clay	1/60 g	1/58 g	-	-
Totals	***122/7852 g***	***37/2503 g***	***11/700 g***	***1/42 g***

This particular assemblage is quite large when compared with others from Crawley. The Old Post Office Site only produced a total of 70 fragments (Stevens 1997). The paucity of ceramic building material and stone roofing slate in the area (*see* Stone report below) during the periods discussed suggests that other materials such as thatch or shingles was also used. Hopefully, future excavations will provide more evidence on the chronological and spatial usage of ceramic roofing materials in different parts of the town.

THE FIRED CLAY by Samantha Crawt

Some 220 pieces of fired clay weighing just over 4 kg were recovered from 27 contexts, mainly medieval in date. All of the material has been recorded on pro forma sheets now housed with the archive and a summary is presented here.

The most noteworthy material was recovered from areas A1 and A2 with 99 pieces (nearly 3 kg) coming from area A2. A large number of these fragments have flattened faces and graded burning and a high proportion is almost certainly related to the 'industrial' activity associated with the ironworking hearth encountered in that part of the site. A total of 80 pieces of burnt clay weighing nearly 1.3 kg was recovered from the hearth. The remaining fragments from the other areas are most likely to be hearth or kiln material, with only one piece of daub recovered from area C2.

THE METALWORK by Luke Barber

Some 78 pieces of metalwork were recovered predominantly from contexts spanning the mid-thirteenth to early fifteenth centuries, although the assemblage is too small to study chronological change. All but four pieces are iron. The ironwork is in poor condition with thick adhering corrosion products though the form of most objects is quite clear. Although by far the majority consists of nails, 15 other iron objects are represented. These include five strip/rod fragments as well as a hinge pivot, probably from a wooden doorframe (from pit fill [553]). Two knives are represented: two pieces from a scale tang example with traces of bone handle (from ditch fill [147]) and three conjoining pieces from a whittle tanged example measuring just in excess of 145mm long (from pit fill [493]). Of interest is the presence of a small barbed and socketed hunting arrow [552] measuring 35mm in length from tip to socket and some 28mm across the widest part of the barbs (cf. London Museum 1940 Type 14).

Two pieces of rolled lead sheeting possibly representing weights of some description (they are not dissimilar to fishing weights but these would not be expected at the current site) were recovered from gully fill [295]. The two pieces of copper alloy consist of a segment of braided wire, possibly from a bracelet or brooch from [235] and a small thimble from [513]. The latter can be paralleled from London (Egan 1998, No. 826) though the Crawley example does not have punched indentations on its apex.

THE METALLURGICAL REMAINS by Luke Barber (incorporating comments by Jeremy Hodgkinson and Sarah Paynter)

Introduction

The site produced a large assemblage of metalworking residues: a total of 3532 pieces, weighing just over 262 kg, from 158 contexts. All material falls within one of seven categories: ore fines (crushed, roasted ore), fuel ash slag, hearth lining

Table 10. Characterization of slag assemblage from site by period and type.

Period (no. of contexts)	**Ore fines etc.**	**Fuel ash**	**Hearth lining**	**Iron (smelting)**	**Iron (undiag-nostic)**	**Iron (smithing) (*Hammer-scale)**	**Blast furnace**	**Totals**
Saxo-Norman	Ore fines 10 g	-	-	1/5 g	-	-	-	1/5 g ore fines 10 g
C12th–mid-13th (10)	Concreted ore 9/1220 g	3/44 g	11/632 g	30/2583 g	85/1066 g	23/4083 g	-	161/ 9628 g
Mid-C13th–mid-14th (64)	Ore fines 662 g Concreted floor 44/1126 g	94/3524 g	7/854 g	529/ 48,590 g	553/ 35,323 g	162/13,600 g * from 10 contexts	7/208 g (intrusive)	1396/ 103,225 g ore fines 662 g
Mid-C14th–15th (34)	Ore fines 182 g Concreted ore 1/868 g	168/ 12,460 g	-	437/ 32,116 g	487/ 37,185 g	230/36,513 g * from 5 contexts	4/38 g (intrusive)	1327/ 119,172 ore fines 182 g
C16th–19th (3)	-	5/440 g	-	9/390 g	5/220 g	6/636 g	-	25/1686 g
Undated (46)	Ore fines 358 g	24/900 g	4/250 g	235/12,440 g	317/ 12,172 g	40/2316 g * from 2 contexts	2/228 g	622/ 28,306 g Ore fines 358 g
Totals (158 contexts)	***Ore fines 1212 g Concreted ore 10/2080 g Concreted floor 44/1126 g***	***294/ 17,368 g***	***22/1736 g***	***1,241/ 96,124 g***	***1,447/ 85,966g***	***461/57,148 g***	***13/474 g***	3532/ 262,022 g Ore fines 1212 g

(usually with adhering slag), iron smelting slag, undiagnostic iron slag (could be smelting or smithing/forging), iron smithing/forging slag and blast furnace slag. All material is quantified by chronological period and category in Table 10. Details of quantification by context are housed in the archive. Representative samples of all slag types have been retained.

Ore roasting

A number of pieces of ferruginous sandstone and clay ironstone were recovered during the excavation (*see* stone report for quantities). Although a number of these have high iron content and were almost certainly gathered for ore, others, with a lesser iron content, may represent low-quality ore or simply scatters of Wealden stone naturally occurring in the vicinity of the site. Whatever the case, it is interesting to note the presence of crushed-up roasted ore in a number of environmental residues. Where this material is large enough for identification it always appears to consist of Wealden clay ironstone — the best-quality ore noted at the site.

The presence of ore fines indicates ore roasting was occurring within the general vicinity. The earliest context containing this material is of Saxo-Norman date (Context 5) though this material could be intrusive. However, there is a notable increase in the presence of ore fines in samples dating between the mid-thirteenth and fifteenth centuries, though most contexts containing it do not postdate the later fourteenth century. Spatially, the ore fines were found in deposits across a wide area of the site and no notable concentrations were present.

Smelting (Tap slag)

Although there is a single piece of smelting slag in the Saxo-Norman context it is not until the twelfth to mid-thirteenth centuries that there appears to be a significant quantity represented. This clearly demonstrates the presence of smelting close by at this time. Although the quantity of smelting slag takes a notable upturn in the mid-thirteenth to mid-fourteenth centuries, this may be misleading as much of the slag in contexts of this period may in fact represent the redistribution of earlier slag from its original primary deposition area adjacent to the smelting hearths. However, the continued high quantities represented in the mid-fourteenth- to fifteenth-century contexts strongly suggests a marked upturn in production from the mid-thirteenth century onwards.

The material is present in a number of different types of context and usually is mixed with 'undiagnostic' iron and smithing slags. The larger groups (>2 kg) of smelting slag were plotted onto a site plan and were found to be scattered across the whole area. Despite this, it is apparent that the largest groups (including those containing smithing slag) were frequently in features, often originally of a domestic nature, which were no longer required and had been deliberately infilled. This was particularly the case in areas A1–A3 (Well [10], large pits [282] and [363] and ditches [146], [294] and [373]). Areas B1, B2 and C1 did not yield any large groups. Area C2 contained seven large pits with notable assemblages ([122], [492], [519], [548], [568], [572] and [618]), three of which also contained quantities of smithing slag.

Smithing/forging

Although smithing slag is present on the site from the twelfth century onwards and, like the smelting slag, appears to peak between the mid-thirteenth and fifteenth centuries, it never reaches the quantities of the smelting slag. These quantities may be misleading however, as it is quite possible that a reasonable proportion of the 'undiagnostic' iron slag relates to the smithing rather than smelting process. Despite this, there is a virtual absence of forge bottoms from this site (only one from ditch fill [147]) suggesting that smelting was the primary activity represented. Whatever the case, it is almost certain that the smithing activity that is represented was concerned with the primary working of the bloom (primary smithing) rather than the manufacture of objects (secondary smithing).

Hammerscale is present in a number of contexts spanning the mid-thirteenth to fifteenth centuries and includes a number of pieces of 'floor' comprising compacted earth and charcoal with hammerscale incorporated (Pit [618]). These are presumably from close to the anvil area of the workshop but appear to be redeposited.

The distribution of hammerscale around the site was plotted in order to identify the proximity of a smithy. This exercise was somewhat biased as it relied on the position of the soil samples and indeed the method of their processing. However, the crude results show hammerscale to be present in low quantities in virtually all areas of the site. As such, most can be viewed as a background scatter dumped with the other slag types. Only one slight concentration was noted: Ditch [338] and Pit [331] in area B2. The quantities involved are still small, but it is possible a smithy lay outside the excavation area to the east/north-east. Work prior to the construction of the relief road also located hammerscale in this area (evaluation Trench 18) but no definite traces of a smithy (Saunders 1998).

Hearth lining and fuel ash slag

In addition to the smelting and smithing/forging slag there is also a moderate quantity of fuel ash slag. This material, which is usually in small irregular lumps, forms when silicate materials such as clay are strongly heated in contact with the ash of a fire causing them to flux and produce a lightweight, often glassy, vesicular slag. Although not diagnostic of process on its own (it can equally be formed in lime-burning etc.) its presence alongside iron slag suggests it is probably an additional residue from either the smelting and/or smithing processes.

Remains of burnt hearth lining, usually with 'undiagnostic' or fuel ash slag adhering were found in a number of deposits. However, a good proportion were located in twelfth- to mid-thirteenth-century contexts suggesting that the earlier ironworking activity may have been taking place close to, or actually on, the current site. This is likely to have been in the vicinity of the northwest corner of area A1 where a cluster of early features contain hearth lining ([215], [235], [239], [251] and [293]). Although some shallow hearths, perhaps used for ore-roasting, may have been lost through truncation, there was still no sign of more substantial bloomeries which, even with some later damage, should have indicated themselves by the degree of burning. Ore-roasting hearths could be expected to be more ephemeral and it is possible that feature [149] represents one. However, the lower fill ([260]) contained a small quantity of smelting and smithing material and the environmental sample from its upper fill, although containing ore fines, also contained a low-density mix of different slag types.

Conclusions

Generally the slag at the site tends to have been mixed, with both smelting and smithing waste appearing together. The material appears in contexts of all types, both linear boundary features, such as ditches and gullies, domestic features (rubbish pits and wells) as well as the now notorious clay and slag-filled pits of no obvious function that have been seen within the town so frequently (Stevens 2006). It would therefore appear that the majority of slag from the excavations has been redeposited from its primary depositional area within the main ironworking zone of the town. The slag could easily have been utilized to create areas of hard-standing and paths as well as being a convenient material to infill unwanted holes. This would certainly explain the very large amounts of slag associated with the well [110] (i.e. over 20 kg of mixed slag retained as a sample of a much larger assemblage). Whether the slag was collected from the ironworking areas by individuals or brought to the domestic quarter of the town on a more formalized basis is uncertain.

Too little evidence is available from the current site to discuss the earliest metalworking in the town (or before the town). The current site has hinted at some Saxo-Norman activity and it is quite possible this may relate to ironworking, but more deposits of this date would be needed before serious comment can be made on this period. Ironworking appears to have established itself during the twelfth century, possibly after 1150. Although the early slag assemblages cluster (e.g. the northwest tip of area A1), this is more due to the density of features than anything else. Although early working areas, with slag *in situ*, would be needed to prove this, ironworking appears to have rapidly increased in scale, staying at its highest levels between the mid-thirteenth to fourteenth/early fifteenth centuries. During this period domestic occupation appears to have increased in tandem with iron production and the waste materials were liberally dispersed around the expanding 'town' and put to all manner of uses.

Metallurgical remains on the current site dramatically stop being deposited from the late fifteenth to early sixteenth centuries. This cessation of ironworking is mirrored by the dramatic reduction in occupation/archaeological features. It can only be assumed that the coming of the blast furnace and the transition to water power at this time heralded the demise of the land-locked bloomeries which were no longer economical in the face of the new technology. At this time, therefore the industry, together with the workers' domestic settlements, dispersed itself into the surrounding landscape in search of favourable locations in the valleys such as Bewbush Furnace or Ifield Forge some 2–3 km from the current site (John Mills, *pers. comm.*) to fit the new technology,. The lack of blast furnace slag at the present site demonstrates both the distance to the nearest blast furnace and the lack of people then in the town. As such, ironworking created the medieval boom 'town' and, with a shift in technology, ironworking virtually finished it.

Table 11. Characterization of the geological material assemblage.

Type	**Saxo-Norman** (1 context)	**C12th–mid- 13th** (6 contexts)	**mid-C13th–mid-14th** (14 contexts)	**mid C14th –late-15th** (13 contexts)	**C16th +** (2 contexts)	**Undated** (10 contexts)	**Totals** (46 contexts)
Fine-grained ferruginous sast. Hastings Beds	1/62 g	17/102 g	25/1234 g	17/1114 g	4/66 g	7/64 g	**71/2642 g**
Ferruginous Upper Tunbridge Wells sast.	5/50 g	-	29/1681 g	23/758 g	-	5/376 g	**62/2865 g**
Upper Tunbridge Wells sast.	-	7/646 g	13/1308 g	7/1016 g	-	1/10 g	**28/2980 g**
Wealden Clay Ironstone	2/4 g	10/92 g	6/54 5g	5/978 g	-	2/72 g	**25/1691 g**
Wealden sast.	2/90 g	1/148 g	2/146 g	1/34 g	1/42 g	-	**7/460 g**
Ferruginous siltstone	-	-	-	1/68 g (whetstone)	-	-	**1/68 g**
Ferruginous sast. Lower Grsd?	1/10 g	1/30 g	-	-	-	1/170 g	**3/210 g**
Glauconitic Lower Grsd (Surrey)	1/186 g	-	-	-	-	-	**1/186 g**
Upper Greensand (Surrey)	-	-	-	1/284 g	-	1/96 g	**2/380 g**
Downland flint	-	-	-	1/2175 g	-	-	**1/2175 g**
Purbeck shelly lmst	-	1/148 g	-	1/34 g	-	-	**2/182 g**
Coal	-	-	1/5 g	-	-	-	**1/5 g**
Welsh slate	-	-	-	-	2/26 g	-	**2/26 g**
German Lava	-	-	1/338 g (quern)	-	-	-	**1/338 g**
Totals	***12/402 g***	***37/1166 g***	***77/5257 g***	***57/6461 g***	***7/134 g***	***17/788 g***	***207/14,208 g***

THE WORKED FLINT by Chris Butler

The fieldwork produced six pieces of worked flint. Two undiagnostic hard hammer-struck flakes and a small flake fragment were residual finds from medieval or undated contexts. The most interesting pieces comprised a medial fragment from a blade, a distal fragment from a bladelet and a fragment from a core, found unstratified in area B1. All three pieces could date from either the Mesolithic or Early Neolithic periods.

THE GEOLOGICAL MATERIAL by Luke Barber (incorporating comments by Bernard Worssam)

The site produced a relatively small stone assemblage, which is summarized in Table 11.

The vast majority of the stone assemblage is composed of Wealden sandstones, most notably those from the Upper Tunbridge Wells series. As such, the bulk of the assemblage can be seen as being of very local origin. It is interesting to note that a large proportion of the recovered sandstones is ferruginous. This material, which was frequently burnt, has too low an iron context to be used as a quality ore for smelting. However, it was frequently mixed with the good quality ore (the clay ironstone) and it is possible either that it was being smelted, or that the ore diggers were trying to 'bulk out' their sacks by adding a little low grade ferruginous sandstone to the high-grade clay ironstone.

The ferruginous Tunbridge Wells sandstone, which was finely bedded, was certainly used to produce stone roofing slates. This is the first recorded use of this stone as a roofing material from an archaeological site in the county — usually it is Horsham stone which was put to this use. The current site has produced at least 47 fragments of stone slate in ferruginous Upper Tunbridge Wells sandstone, at least two fragments of which have round peg-holes. The stone is not as 'compacted' as Horsham stone and would certainly not have been as good for roofing, however, its close proximity to the site may have compensated in part. It is interesting to note that the earliest contexts containing these roof slates are dated between the mid-thirteenth and mid-fourteenth centuries (fills [552] and [553] in pit [548]: 16 and 10 pieces respectively). All the finds of such roofing slates are confined to area C2 suggesting that a building utilizing them stood somewhere in this vicinity. The stone slate fragments in mid-fourteenth- to late fifteenth-century pits (amounting to 20 pieces) in this area may either be residual or demonstrate the continued use of the stone-slated building. Most archaeological finds of Horsham stone tend to be confined to after the mid-fourteenth century, suggesting that the use of this local stone for roofing may have been a pioneering venture.

The other stone from the site demonstrates limited exploitation of geological resources to the north in Surrey where a little Upper and Lower Greensand appear to have been acquired. More exotic stone is represented by two burnt fragments of Purbeck limestone (possibly originally from a mortar), an ?intrusive piece of coal, a single piece of German lava quern and a little Welsh slate (in eighteenth-/nineteenth-century contexts). With the exception of the lava quern, only one definitely worked stone is present: a fragment of square-sectioned whetstone 82 mm long (19 × 18 mm in section) from pit [282].

THE LEATHER by Luke Barber

A single piece of leather sole was recovered from the lower fill of Well [10], and dated 1300–1400 on ceramic grounds.

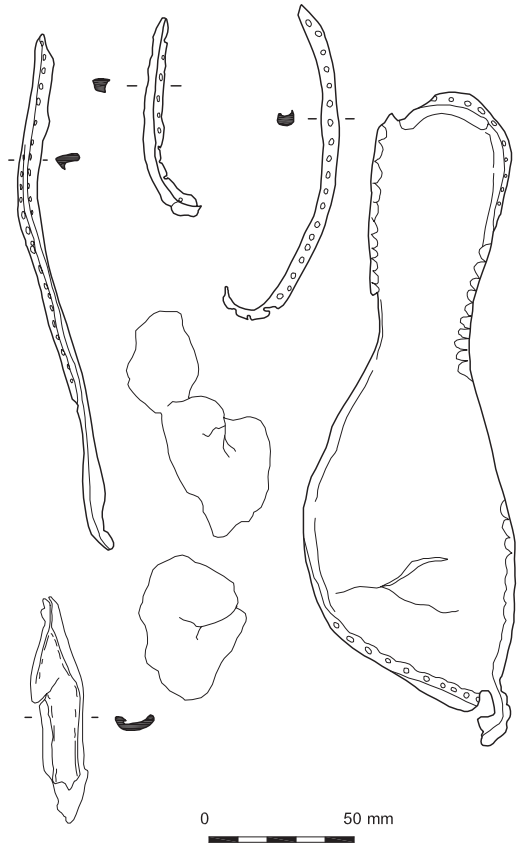

Fig. 14. Leather.

The sole, which appears to be from a right-footed shoe, has a narrow heel and semi-pointed toe typical of the fourteenth century (Fig. 14). Similar examples have been recovered from London (Grew & de Neergaard 1988, No. 101, dated late fourteenth century) and Hull (Armstrong and Ayers 1987, No. 418, dated mid-fourteenth century). Complete length: 225 mm.

THE ANIMAL BONE by Lucy Sibun

Only 85 fragments (354 g) were recovered, with a further 5 g of calcined bone from environmental samples, from a total of 11 contexts. Nine of these date to the thirteenth to fourteenth centuries, with one context each dated to the fifteenth century and nineteenth century. As a result of the acidic nature of the subsoil the material was in poor condition.

The thirteenth- to fourteenth-century bone is highly fragmented and it is not possible to identify the specific teeth or establish the minimum numbers of individuals represented. Several contexts produced only cattle molar fragments. Context [269] also contained a fragment of cattle humerus, which had been chopped at the distal end. Context [493] contained seven fragments of cattle molar and both [493] and [308] contained sheep-sized long-bone fragments.

THE EGGSHELL
A number of pieces of eggshell (chicken-sized) were recovered from Well [10] fill [269].

THE PLANT REMAINS by Wendy Carruthers
Results
Tables 12 and 13 present the results of the analysis of the plant remains. The charred plant remains found during the assessment scan are summarized in Table 12, and the waterlogged plant remains sorted and quantified during the full analysis stage are listed in Table 13. Nomenclature and much of the habitat information are taken from Stace (1997).

Discussion
The charred plant remains
As can be seen from Table 12, charred plant remains were present in very low concentrations (always less than 1 fragment per litre) in only 25% of the samples, being absent from the remaining 75% of the flots (not counting charcoal, *see* Gale, this article). It is always dangerous to put forward an interpretation that is based on absence of evidence, particularly where charred plant remains are concerned, since there may be many reasons why plant material failed to become preserved by charring (e.g. use of waste rather than burning, deposition in an area of the site not sampled, post-depositional destruction of material). However, where large numbers of samples of reasonable size have been examined from a wide range of deposits that are not prehistoric (early prehistoric deposits often produce very sparse charred plant assemblages), the lack of charred evidence can be seen as significant.

The scarcity of charred plant remains in all phases of samples from this site could have been due to factors related to preservation, or it may indicate that the level of activity relating to arable agriculture taking place was low over the periods investigated. The flots were found to be full of modern roots, uncharred modern seeds and slaggy material, indicating that modern disturbance of archaeological deposits had taken place. This in itself would not have caused the total destruction of charred plant remains if material had originally existed in reasonable quantities, although it would probably have caused some surface erosion and fragmentation of cereal grains. The scarcity, therefore, appears to be at least partly a reflection of very low levels of arable agriculture and/or short length or low intensity of occupation on the site.

The clayey nature of the local soils and persistence of large areas of woodland on the Weald may be significant, since in the author's experience sites in areas dominated by clay soils often produce scant evidence for arable cultivation e.g. Gatwick (Carruthers 2005), Hadlow to High Halden Pipeline, Kent (Carruthers forthcoming). Clay soils were

Table 12. Charred plant remains.

Taxa sample context	**1012 215**	**1014 239**	**1015 293**	**1021 289**	**1025 327**	**1006 147**	**1001 110**	**1007 147**	**1039 573**	**1017 150**	**1013 189**
PHASE	**1**	**2**	**2**	**2**	**2**	**3**	**3**	**3**	**3**	**?**	**?**
Triticum aestivum/turgidum (bread/rivet-type free threshing wheat grain)*	2	5		1		1		3		1	
Avena sp. (wild/cultivated oat grain) A*	1	2	1s	11	1			6	1		
Secale cereale L. (rye grain)*	1	1									
Indeterminate cereal grain A*		1		5				4	1		
Polygonum aviculare L. (knotgrass achene) CD								1			
Pisum sativum L. (pea) *				cf.2fg							
Galium aparine L. (cleavers nutlet) GDH											1
Tripleurospermum inordorum (scentless mayweed) CD		1									
Chrysanthemum segetum L. (cornmon marigold) ADa		1		2							
Arrhenatherum elatius var. *bulbosum* (onion couch tuber) CDG							1				
Carex sp. (sedge nutlet) MPw		1									
Willow-type bud					1						
TOTAL:	**4**	**12**	**1**	**21**	**2**	**1**	**1**	**15**	**2**	**1**	**1**
Soil volume processed (litres):	**32**	**24**	**40**	**24**	**40**	**24**	**24**	**24**	**20**	**16**	**24**
Fragments per litre:	**0.1**	**0.5**	**0.03**	**0.9**	**0.05**	**0.04**	**0.04**	**0.6**	**0.1**	**0.06**	**0.04**

KEY:
Period: 1 = Saxo-Norman; 2= C13th-C14th; 3= C14th-C15th
cf. = uncertain ID; fg = fragment; s = sprouted
Habitat preferences:A = arable; C = cultivated; D = disturbed/waste; E = heath; G = grassland; H = hedgerow; M = marsh/bog; R = rivers/ditches/ponds; S = scrub; W = woods; Y = waysides/hedgerows; a = acidic soils; c = calcareous soils; d = dry soils; n = nutrient-rich soils; o = open ground; w = wet/damp soils; * = plant of economic value; cf. = uncertain ID

Table 13. Waterlogged plant remains from well [10].

Sample	**1023**	**1022**
Context	**269**	**110**
Taxa	**Bottom fill**	**Upper fill**
Ranunculus acris/bulbosus/repens (buttercup achene) DG	118	28
Fumaria sp. (fumitory achene) CD		2
Cannabis sativa L. (hemp seed) *	4	2
Ficus carica L. (fig seed) *	9	49
Urtica dioica L. (stinging nettle achene) CDn	++++	+++
Quercus sp. (acorn seed base) HSW	2	3
Quercus sp. (acorn cup fragment) HSW	1	2
Quercus sp. (immature acorn) HSW		1
Chenopodium album L. (fat-hen seed) CDn	1	2
Atriplex patula/prostrata (orache seed) CDn	260	24
Agrostemma githago L. (corn cockle seed frag) A	33	36
Stellaria media (L.) Villars (common chickweed seed) CD	127	5
Cerastium sp. (chickweed seed) ADGH	2	
Lychnis flos-cuculi L. (ragged robin seed) GwM	1	
Rumex acetosella L. (sheep's sorrel achene) GECas	1	1
R. crispus-type (dock achene with poor calyx) woBP	3	1
Rumex sp. (dock achene) CDG	10	2
Persicaria lapathifolia (L.)Gray (pale persicaria achene) CDw	2	5
Persicaria hydropiper (L.)Spach (water-pepper nutlet) wMPh	18	15
Polygonum aviculare (knotgrass achene) CD	13	5
Salix sp. (willow bud) HSWP	++	++
Rubus sect. *Glandulosus* (bramble seed) *	11	3
Rosa /Rubus sp. (rose/bramble type thorn) HSW	1	3
Malus sylvestris (L.)Mill. (apple seed) *	3	3
Malus sylvestris (L.)Mill. (apple endocarp) *	53	26
Prunus spinosa L. (sloe stone) HSW *	1	1fg.
P. avium L. (cherry stone) *	15	11
Prunus/Crataegus sp. (sloe /hawthorn type thorn) HSW	1	
Linum usitatissimum (cultivated flax capsule frags) *	38	19
Linum usitatissimum (cultivated flax seeds) *	19	16
Ilex aquifolium L. (holly seed) HSW		1
Acer sp. (maple seed frag.) HSW	cf.1	
Aethusa cynapium L. (fool's parsley mericarp) CD	4	9
Conium maculatum L. (hemlock mericarp) wDY	20	14
cf. *Carum carvi* L. (cf. caraway mericarp frag.) *		1
Torilis sp. (hedge-parsley mericarp) AGHWo		1
Glechoma hederacea L. (ground-ivy nutlet) DHW		2
Prunella vulgaris L. (selfheal nutlet) GDWo		2
Lamium sp. (deadnettle nutlet) DGHY	3	
Galeopsis tetrahit L. (common hemp-nettle nutlet) ADWow	13	2
Stachys sylvatica L. (hedge woundwort nutlet) DHWh	9	10
Rhinanthus sp. (yellow-rattle achene) G	1	
Centaurea sp. (knapweed achene frag.) ADG	1	1
Lapsana communis L. (nipplewort achene) DHWo	8	20
Sonchus asper (L.)Hill (prickly sow-thistle achene) CDY		3

Table 13. *(cont.)*

Sample	**1023**	**1022**
Context	**269**	**110**
Taxa	**Bottom fill**	**Upper fill**
Juncus sp. (rush) GMPw	++	+
Eleocharis subg. *Palustres* (spike-rush nutlet) MPw		1
Avena sp. (Charred oat grains, one sprouted) *	[2]	
Indeterminate charred cereal grain *	[1]	
Whole cereal caryopsis *	1	6
Cereal bran frags *	+++	+++
Straw culm node *	2	
Poaceae (small seeded grass caryopsis) CDG	+++	+++
Mosses	++	++
Wood chips, twigs and leaf frags	+++	+++
Cladoceran ephippia	++	+
Total remains:	**818 [3]**	**343**
Sample volume (litres):	**16**	**64**
Washover volume (ml):	**2750**	**750**

KEY: All remains are waterlogged unless in [ ] brackets = charred
+ = occasional ; ++ = several ; +++ = frequent; ++++ abundant

Habitat preferences: A = arable; B = river banks etc.; C = cultivated; D = disturbed/waste ground; E = heaths; F = fens; G = grassland; H = hedgerows; M = marsh/bog; P = ponds, rivers, ditches; S = scrub; W = woods; Y = waysides; * = cultivated or economically useful taxon
Soil preferences: a = acidic; c = calcareous; d =dry; h = shaded; n = nutrient-rich; o = open; s = sandy; w = wet/damp

obviously more difficult to work, although by the Roman period improvements to the plough and the cultivation of crops better suited to heavier soils, such as spelt wheat and bread wheat, meant that even the more difficult soils could be brought into cultivation. Within the Weald, however, large areas of woodland survived relatively intact into the medieval period, according to the Domesday Survey (Rackham 1976). Its importance for ironworking may have ensured that the Weald remained largely wooded, since charcoal production from carefully managed woodland would have been of prime importance in this area for many centuries.

Although the evidence from Crawley is sparse, it is interesting to note that oat grains (*Avena* sp.) were more frequent than bread/rivet-type wheat grains (*Triticum aestivum/turgidum*-type), since free-threshing wheats (includes bread wheat and rivet wheat) were the preferred cereals for human consumption during the medieval period in most areas of the British Isles. Where soils or the climate was a limiting factor, however, such as in many areas of Wales and Scotland, oats were often grown in greater quantities, since they can tolerate poor, acidic soils and can be harvested prior to ripening in damp climates. The presence of the arable weed, corn marigold (*Chrysanthemum segetum*) in two samples confirms that moderately acidic, dry, light sandy or loamy soils were being cultivated (Howarth & Williams 1972). This weed is commonly associated with oats in Scotland today, and was a serious cereal contaminant in the medieval period (Salisbury 1964). Oats are also a useful high-energy fodder crop, so their frequency could indicate that livestock-rearing was of greater importance in the area than the production of grain for human consumption. As has been suggested for other industrial sites (Carruthers forthcoming), the occupants may only have had enough time to grow fodder for working animals if they were involved in an industry such as ironworking. Processed grain for human consumption, or perhaps even ready-made products such as bread, may have been brought onto the site, leaving fewer traces in the charred plant record.

From the few charred plant remains preserved in one Saxo-Norman sample, four thirteenth- to fourteenth century-samples and four fourteenth- to fifteenth century- samples, the evidence suggests that bread/rivet-type wheat, oats and rye (*Secale cereale*) were the principal cereals grown. Barley (an important fodder crop) is better suited to lighter, more calcareous soils so it is likely that very little, if any, was grown locally. If not grown, the main fodder crop grown in its place was probably oats, as noted above. Peas (*Pisum sativum*) may also have been used for human and animal consumption, although this identification could not be confirmed owing to poor preservation of the charred remains (the remains could have been from a large-seeded vetch or tare, as no hilum was visible). Pea haulms or 'straw' was often fed to livestock, and the seed crop itself is a valuable source of protein that can easily be stored for long periods. Leguminous crops such as peas and beans also have the advantage of restoring nitrogen to poor soils, due to nitrogen-fixing bacteria in their root nodules.

The few weed remains present were common weeds of disturbed and cultivated soils. The onion couch tuber (*Arrhenatherum elatius* var. *bulbosum*) may have been pulled up with weeds or burnt *in situ*. It is a tall grass that can grow as an arable weed but is often indicative of cultivated land

that has been abandoned and reverted to grassland. Moist ground indicators such as sedges (*Carex* sp.) and willow (cf. *Salix* sp. bud) reflect the presence of damp ground, but do not necessarily indicate that damp soils were cultivated, since the charred material was clearly of mixed origin. Fuel wood, hay and other types of waste were probably burnt with the domestic waste that produced the cereal remains. No chaff was recovered to indicate the presence of cereal processing waste, but this is typical of Saxon and later assemblages where the principal cereals being cultivated for human consumption were free-threshing. It is difficult to determine, therefore, to what extent cereals were being grown by the occupants, or whether they were being purchased at the local markets and brought onto the site.

Waterlogged plant remains from well [10]

A much wider range of plant material was recovered from the well, providing information about the local environment, economy and the deposition of waste (Table 13). The good state of preservation of the waterlogged plant remains and preservation of a wide range of insect material has enabled a detailed analysis to be made.

The bottom [269] and upper [110] well fills were very similar in overall composition, consisting of well-preserved organic remains including frequent large wood fragments (including worked wood chips), twigs, mosses, buds and leaf fragments. Acorn (*Quercus* sp.) fragments and an immature acorn were recovered, indicating either that mature oak trees were growing very close to the well, or that woodland remains were being brought into the area. This latter suggestion could encompass the importation of leaf fodder for livestock. Other (inedible to humans) woodland or hedgerow indicators included thorns of both rose/bramble type and sloe/hawthorn-type, a holly seed (*Ilex aquifolium*), maple seed fragment (*Acer* sp.) and a few herbs such as hedge-parsley (*Torilis* sp.) that often grow in shady places, hedgerows and woodlands. Edible woodland/hedgerow remains are described further below, since there was evidence that human sewage had also been deposited in the well.

It is interesting to see that the insect report (this article) specifically mentions the presence of leaf beetles that feed on willows/poplars/aspens, since willow (*Salix* sp.) buds were fairly common in both samples. Other insect remains indicative of woodlands included species that hibernate in leaf litter. Decomposers were fairly common, although Allison noted that they were not abundant enough to suggest the dumping of well-rotted leaf litter in the well. She suggests that the insect fauna was more indicative of a natural assemblage that had originated from trees and scrub growing around the well than of a dumped deposit. The plant and insect remains, therefore, could represent a post-abandonment phase of natural infilling from scrub growing around the well. When it was fully operational, such contamination of the water is likely to have been avoided, either by covering the well or by clearing a wide area around it of trees and scrub.

The second category of plant material recorded provided more definite evidence that the well had been used for dumping waste. Plant taxa indicative of human sewage were present in significant quantities in both samples, indicating that the well had been used for the disposal of excrement. The presence of worked wood chips also confirmed that not all of the woody plant material had accumulated naturally. Since both flax (*Linum usitatissimum*) capsule fragments and seeds were present, it is likely that waste products from a variety of industrial and domestic activities had been deposited in the well after it had fallen into disuse. Although the flax seeds could have originated from sewage (they can be eaten as a laxative), the frequent small fragments of capsule were probably introduced in waste from the riffling process, a stage in the processing of flax for fibre where the dried plants are pulled through a rake to remove the dried seed heads. Because the capsules are dry and brittle at this stage, they break into characteristically small fragments.

The presence of hemp (*Cannabis sativa*) seeds was of interest, since this is an introduced crop for which the documentary records are quite frequent for the later medieval period, but the archaeobotanical records are sparse. Hemp seeds have been recovered in small quantities from quaysides, such as at the fourteenth–fifteenth century Plymouth Dung Quay (Carruthers 2003a), monastic establishments (e.g. thirteenth/fourteenth century St Mary's Priory, Coventry; Carruthers 2003b) and in one case, *in situ* in a hemp retting pool at Glasson Moss, Cumbria (early medieval: Cox *et al.* 2000). However, there is little archaeobotanical evidence for the cultivation of this plant in the gardens of ordinary households to match the documentary evidence from writers such as Thomas Tusser (1557) and Henry Best (dated 1642 in Woodward 1984). In his 'A hundredth good poyntes of husbandry', Tusser advises; 'For flax and for hemp, for to haue of her owne: the wife must in May, take good hede it be sowne.'

The hemp seeds from well [10] on the Crawley site may represent retting waste. Grieve (1931) notes that hemp fibre is used for cordage, sacking and sail-cloth, although its uses may have been much wider in the medieval period. Alternatively, the seeds may have been consumed for medicinal purposes, since the evidence suggests that sewage had been deposited in the well after its abandonment.

Plant remains that were more obviously indicative of sewage included cereal bran fragments, corn cockle (*Agrostemma githago*) seed fragments and fruit remains, in particular fig (*Ficus carica*) seeds. All of these remains were frequent in both samples. The presence of apple (*Malus sylvestris*) endocarp fragments — the 'scaly' material in an apple core — is also characteristic of sewage. The remains from the well [10] suggested that the diet of the people using the well for sewage disposal was fairly 'urban' in character, as demonstrated by the presence of exotic fruits such as fig, the imported herb caraway (cf. *Carum carvi*) and possibly, hemp (*Cannabis sativa*) seeds. This observation could partly be an artefact of the problem that very few rural waterlogged deposits or mineralized deposits have produced faecal remains, since presumably excrement would have been valued as 'night soil' in all but the largest settlements. Unfortunately, charred plant assemblages rarely produce evidence for fruits and herbs, so the availability and use of imported foods by rural populations is still largely unknown. There is much more archaeobotanical evidence for the urban diet, e.g. from medieval waterfronts.

The diet represented by the sewage dumped in well [10] included a flour-based product — presumably bread. This was indicated by the large amount of bran in the samples and also by the fragments of corn cockle seed, a noxious arable weed which would have been ground up with the grain and eaten in bread. Corn cockle seeds are poisonous if eaten in

large enough quantities, but fortunately the large black seeds can easily be picked out of the corn by hand prior to milling. Clearly this was not a foolproof method, as most medieval sewage contains fragments of corn cockle seed. Unlike the cesspits from Saxon Southampton that produced abundant evidence for the consumption of peas and beans (Carruthers 2005), no fragments of leguminous seeds were observed; the only herb recorded was the possible caraway seed in the upper part of the well. Fruits, however, were quite well represented, including apple, bramble (*Rubus* sect. *Glandulosus*), sloe (*Prunus spinosa*), cherry (*P. avium*) and fig. In all cases seeds of these fruits were recovered from both the top and bottom samples, suggesting that the dumping had taken place over a fairly short space of time. Diet is unlikely to have been so uniform over a long period, particularly where imported foods were concerned.

Some of the mosses recovered from the well could have been used as toilet paper, as has been suggested for other faecal deposits, or hay and rushes could have been used. Mosses may also have been growing around the walls of the well or have been introduced amongst other types of waste, such as the woodland remains.

The third, most numerically dominant group of taxa, were the weeds of disturbed or cultivated soils. The most abundant of these were the weeds of nutrient-enriched soils, such as stinging nettles (*Urtica dioica*) orache (*Atriplex patula/prostrata*) and common chickweed (*Stellaria media*). The flightless nymphs of nettle-feeding bugs were present amongst the insect remains (Allison, this article), indicating that the nettles were probably growing nearby. Since dung-feeders were also recovered, livestock may have been grazing around the well. This would have led to nutrient enrichment of the area, as would the dumping of faecal waste. Perhaps some of the grassland/meadow plant remains such as yellow-rattle (*Rhinanthus* sp.), buttercups (*Ranunculus acris/bulbosus/repens*) and grass seeds (Poaceae) were deposited in the well as dung. Alternatively, they may have grown around the well, since Allison suggests that the area, although colonized by trees and/or shrubs, was probably still fairly open.

Wet ground plants and insect taxa were also present, indicating moist soils around the well, e.g. spike-rush (*Eleocharis* subg. *Palustres*), hemlock (*Conium maculatum*) and rushes (*Juncus* sp.). However, from the plant point of view, this habitat was not well-represented. Perhaps there was too much poaching of the mud around the well for damp-ground weeds to survive. Heavy grazing would also have prevented plants from setting seeds.

Interestingly, in contrast with the records of aquatic insects, no aquatic plant remains were recovered. This suggests that the dumping occurred immediately after the well fell out of use, since the good state of preservation of the organic remains demonstrates that the well did not dry up and any period of abandonment prior to the dumping would have enabled aquatic weeds such as duckweed and water plantain to become established. During the use of the well the water would have been too frequently disturbed for aquatic plants to have colonized the well, and it may have deliberately been kept clean or been covered. Daphnia (Cladoceran ephippia) and aquatic insects, however, were able to colonize the water. The continued presence of daphnia in the two samples suggests that the water level remained fairly high during the backfilling. If the level had fallen at any time not only would there have been much more evidence of organic decay in the seeds, but there may also have been signs of preservation by mineralization due to the presence of faecal waste. This type of preservation occurs in mineral-rich deposits where the soils are wet but not totally waterlogged (Green 1979; Carruthers 2000).

Comparing the two samples in more detail, as noted above, there was a remarkable similarity between the samples, including the presence of notable and exotic taxa. In all cases except for the single possible caraway seed, these more unusual remains occurred in both sample <1023> and <1022> (i.e. hemp, fig, apple, sloe, cherry, flax, cereal bran). The other categories of remains such as woodland taxa and abundant nettles were also found in both samples. Although the upper sample was four times larger than the lower one prior to washover, a much larger quantity of organic material was recovered from the lower sample, indicating either that some loss of organic material had occurred, or that the upper sample was much less organic in the first place. The seed concentration was roughly ten times greater in the lower sample and, when corrected for sample size, the only taxon to be slightly more frequent in the upper layer was fig – most taxa were less frequent. However, the plant remains showed no obvious signs of decay and woody-seeded taxa such as bramble and sloe were not more frequent in the upper sample (the usual sign of organic decay in a sample). As noted above, it is likely that the upper deposit had remained waterlogged, so organic decay seems unlikely. Therefore, the upper deposit probably contained far more mineral soil at the time of deposition.

Conclusions for well [10]

During the use of Well [10] there was too much disturbance (and possibly cleaning out or covering of the well), for an aquatic flora to become established. Soon after its abandonment, material such as sewage, woodworking and fibre-crop processing waste was deposited in the well, large quantities being dumped over a fairly short period into the water-filled feature. It is uncertain how much of the woodland remains represent scrub and woodland that grew up around the well post-abandonment, but the presence of acorns does not fit in with a model of a totally natural accumulation of woodland litter if the deposits formed soon after abandonment. Perhaps some woody material was brought in as leaf fodder for grazing livestock. The soil around the well was clearly nutrient-rich and damp in places, but an aquatic flora did not become established in the well, so perhaps there was no permanent standing water in the feature once waste had been dumped (maybe only seasonal standing water). Alternatively, frequent disturbance could still have been taking place, perhaps by livestock using it as a drinking hole, once again preventing an aquatic flora from becoming established.

Wells of Roman to medieval date have been examined from many sites around the British Isles, and they have often been shown to have been used for the disposal of a range of different types of waste after abandonment (e.g. Greig 1991; Carruthers forthcoming). Obviously, use would have been made of a convenient deep hole in an urban situation at a time when waste disposal was a problem, but in more rural locations the backfilling of wells could have been more of a safety measure. The Crawley well has provided some valuable insights into the diet and economy of the thirteenth- to fifteenth-century occupants.

THE CHARCOAL AND WOOD by Rowena Gale

Introduction

The taxa identified are presented in Table 15. Classification follows that of *Flora Europaea* (Tutin, Heywood *et al*. 1964–80). Group names are given when anatomical differences between related genera are too slight to allow secure identification to genus level. These include members of the Pomoideae (*Crataegus, Malus, Pyrus* and *Sorbus*) and Salicaceae (*Salix* and *Populus*). When a genus is represented by a single species in the British flora, it is named as the most likely origin of the wood, but it should be noted that it is rarely possible to name individual species from wood features and exotic species of trees and shrubs were introduced to Britain from pre-medieval periods (Godwin 1956; Mitchell 1974). The anatomical structures of the charcoal were consistent with the following taxa or groups of taxa:

Betulaceae. *Alnus glutinosa* (L.) Gaertner, European alder; *Betula* sp., birch

Corylaceae. *Corylus avellana* L., hazel

Fagaceae. *Fagus sylvatica* L., beech; *Quercus* sp., oak

Rosaceae. Subfamilies:

Pomoideae, which includes *Crataegus* sp., hawthorn; *Malus* sp., apple; *Pyrus* sp., pear; *Sorbus* spp., rowan, service tree and whitebeam. These taxa are anatomically similar; one or more taxa may be represented in the charcoal.

Prunoideae. *Prunus* sp., blackthorn or cherry

Salicaceae. *Salix* sp., willow, and *Populus* sp., poplar. In most respects these taxa are anatomically similar.

Tiliaceae. Tilia sp., lime

Mid-twelfth to mid-thirteenth century

Charcoal was examined from samples <1015> and <1016> from the fills of pit [250] and the adjacent gully [292] in area A1. The charcoal-rich gully sample <1015> (weight 305 g) was 50% subsampled. Birch (*Betula* sp.), beech (*Fagus* sp.) and oak (*Quercus* sp.) formed the dominant taxa; the sample also included alder (*Alnus glutinosa*), willow (*Salix* sp.) and/or poplar (*Populus* sp.), and, in sample <1015>, the hawthorn/ *Sorbus* group (Pomoideae). Fragmented pieces of narrow roundwood from birch and oak confirmed the use of narrow stem material. Oak largewood (including heartwood) was also present in both samples. Both contexts included metalworking slag and pottery and it is probable that the charcoal represents both domestic and industrial fuel.

Sample <1017> was recovered from the fill of the hearth in area A2. The function of the hearth is unknown and although fragments of kiln lining may implicate industrial use (e.g., ore-roasting), the absence of associated ironworking features in the close vicinity challenges the veracity of this suggestion. Although poorly preserved, the charcoal indicated the use of birch (*Betula* sp.), beech (*Fagus* sp.) and oak (*Quercus* sp.). The oak included both narrow roundwood and largewood.

Three small chips of oak (*Quercus* sp.) heartwood were recovered from fill [553] in the cesspit in area C2. Tool-marks present on the woodchips were consistent with those of timber conversion or woodworking.

Mid-thirteenth to mid fourteenth centuries

Pits [572] and [618] were sited close together in area C2; the fills of these pits provided samples <1039> and <1045>. Although both features contained pottery and charcoal, slag was only recorded in pit [572], thus, by implication the contents of pit [618] seem more likely to be of domestic origin. The similarity of species dominance in the charcoal from these contexts (birch, *Betula* sp.; beech *Fagus* sp.; and oak, *Quercus* sp.), however, suggests that fuel for both domestic and industrial use was procured from a common source. In addition to those named above, alder (*Alnus glutinosa*) was present in pit [618] and hazel (*Corylus avellana*) in pit [572].

A small quantity of charcoal, sample <1001>, was collected from the fill of the Well [10] and identified as birch (*Betula* sp.), beech (*Fagus* sp.) and oak (*Quercus* sp.); a single small fragment was provisionally identified as lime (*Tilia* sp.). The well also contained waterlogged pieces of roundwood, sample <1022>, ranging in diameter from 10 – 15 mm. Four short lengths were identified as hazel (*Corylus avellana*). The rod-like morphology and wide annual increments were typically those of coppiced stems. A single stem from willow (*Salix* sp.) or poplar (*Populus* sp.) – probably willow – was also present.

Oak (*Quercus* sp.) woodworking chips were also recorded in sample <1023>, context (569), together with beech (*Fagus* sp.) (probably a woodchip) and willow (*Salix* sp.)/ poplar (*Populus* sp.) roundwood ranging in diameter from 10–30 mm. One piece of roundwood presented tool-marks.

Mid-fourteenth to mid-fifteenth centuries

Sample <1031> was obtained from the fill of Pit [368] in area C3. Pottery and iron-working slag were also present. The taxa present were identified as birch (*Betula* sp.), beech (*Fagus* sp.), oak (*Quercus* sp.) and blackthorn or cherry (*Prunus* sp.).

Discussion

The ASDA site included a variety of features dated to the medieval period. Deposits of household waste, including pottery and domestic fuel debris, were recorded in a large number of features across the site associated with relatively large quantities of ironworking slag. During the medieval period the local economy of the region was driven mainly by ironworking and associated woodland industries (e.g. woodland management and charcoal burning) (Straker 1931; Cleere and Crossley 1995).

The frequency of slag throughout the site is puzzling, unless it was mainly brought onto the site purely for purposes of infilling. Material collected from slag heaps (or furnaces) would almost certainly have incorporated fuel debris (charcoal). Thus features containing slag, pottery and charcoal are assumed to include the remains of both industrial and domestic fuel. The seven samples of charcoal examined (Table 15), dated from the mid-twelfth to the mid-fifteenth century, illustrate the importance of birch (*Betula* sp.), beech (*Fagus* sp.) and oak (*Quercus* sp.), for both domestic fuel, e.g. from the well [10] and the hearth [149], and industrial use, e.g., from pits [250], [368], [572], [618] and gully [1015]. Less frequent species include alder (*Alnus glutinosa*), hazel (*Corylus avellana*), the hawthorn/ *Sorbus* group (Pomoideae), blackthorn or cherry (*Prunus* sp.), willow (*Salix* sp.) or poplar (*Populus* sp.) and possibly lime (*Tilia* sp.) (Table 15). A similar emphasis on the use of birch, beech and oak was recorded at the ironworking site at London Road (Andrews 2001).

The evidence suggests that a similar combination of wood species was used for both industrial and domestic purposes. It is probable that the only difference between these fuels would have been the use of firewood (probably faggots plus oak largewood) for cooking and heating as opposed to charcoal for ironworking. But, since the end product of burning firewood and charcoal fuel are indistinguishable, secure evidence of this

cannot be obtained from the charcoal residues. In view of the uncertain origin of the charcoal deposits, this interpretation remains speculative.

Deposits of waterlogged wood were extracted from the well [10], the possible cesspit [548] and pit [568]. The well deposit consisted of narrow roundwood, mostly hazel but also willow / poplar, of which the hazel was almost certainly coppice growth. Although likely to be artefactual, the origin of this deposit is unknown. Oak chips present in the possible cesspit [548] and pit [568] in area C2 were indicative of woodworking or the conversion of largewood or timber. The sequential dating of these features implies that woodworking activities in this part of the site endured from the mid-twelfth to the mid-fourteenth century. Willow/ poplar roundwood (diameters 10–20 mm) was also present in pit [568]; one piece bore tool marks. These may have been artefactual in origin (e.g., from a derelict hurdle) but could represent woodworking waste.

The Sussex Weald is characterized by dense oak/ beech woodland which, during the medieval period, was extensively controlled and managed to provide fuel and timber, not only for local use but to supply firewood to London and the Continent (Tittensor 1978; Galloway *et al* 1996). In addition, these woodlands supported a wide range of trees and shrubs, although local distribution would have been determined by soil type, moisture and aspect. Evidence from fuel residues from the site at Asda and from the contemporary site at London Road, Crawley (Andrews *et al* 2001) suggests that the provision of both firewood and charcoal was probably as much influenced by the availability of species as by preferential selection. Fortuitously, oak, beech and birch provide high-calorie fuels (although combustion properties differ slightly according to the wood structure of each).

During the medieval period the Weald was under immense pressure to maintain and supply adequate woodland resources (Straker 1931; Cleere & Crossley 1995) and it is probable that all but the most inaccessible woodland consisted of coppice with standards, with the cycles of rotation related to the ultimate use of the wood (e.g, faggots, poles or timber). The charcoal from Asda was too fragmented to assess the use of coppiced wood and, although narrow roundwood was recorded for both oak and birch, it was not possible to estimate stem diameters or ages of felling. The waterlogged wood, however, did contain narrow stems, from both hazel and willow / poplar, and although very degraded, the morphology and growth pattern of the hazel stems were consistent with those of coppiced stems.

Oak largewood, probably from wide roundwood or cordwood, was also identified. Although fuel would almost certainly have been procured from locally managed woodland, this supply cannot be verified from the charcoal.

Conclusion

The results of the charcoal analysis demonstrate that birch (*Betula* sp.), beech (*Fagus* sp.) and oak (*Quercus* sp.) consistently supplied the bulk of fuel requirements probably for both industrial and domestic purposes. These results correlate with those from a contemporary ironworking site at London Road, Crawley. Although the charcoal was too comminuted to assess the use of managed woodland, waterlogged hazel (*Corylus avellana*) stems from well [10] verified the presence of coppiced woodland. In view of the history of the Sussex Weald for this period, it is suggested that woodland resources supplying local towns and industries could only have been maintained through the use of managed woodland.

Radiocarbon dating

A single sample of wood charcoal from context [150] was submitted for radiocarbon dating, from the fill of hearth feature [149] located in area A2. This produced a measurement of 870±40 BP (Beta-198015, cal. AD 1040–1260).

Details of the radiocarbon dates are given in Table 14 and are quoted in accordance with the international standard known as the Trondheim convention (Stuiver & Kra 1986). They are given as conventional radiocarbon ages (Stuiver & Polach 1977). The radiocarbon date has been calibrated using OxCal v3.10 (Bronk Ramsey 1995; 1998;2001; http://rlaha.ox.ac.uk/), using the INTCAL 04 calibration curve of Reimer *et al*. (2004). The calibrated date ranges cited in the text are those for 95% confidence. They are quoted in the form recommended by Mook (1986), with the end points rounded outwards to 5 years where the error on the determination is ±25 or less, or to 10 years where the error is greater than this.

THE INSECT REMAINS

by Enid Allison and John Carrott

Introduction

A 1-litre subsample of 'wash over' (sieved to 500 microns) from sample <1023> (waterlogged lower well fill, Context [269]) was sent for insect analysis. The lower fill of the well contained substantial quantities of wood and leaves. The specific question raised was whether this material was a natural accumulation from local woodland or scrub, or dumped debris. The 'washover' was subjected to paraffin flotation to extract insect remains following the methods of Kenward *et al*. (1980). It should be noted that the initial use of 0.5 mm mesh may have resulted in the loss of some very small beetle taxa.

The flot produced was examined for the presence of insects and other invertebrates. Beetles and bug remains were removed onto moist filter paper for identification using a low-power microscope (×10–×70). Identification was by comparison with modern insect material and by reference to published works. Numbers of individuals and taxa of beetles (Coleoptera) and bugs (Hemiptera) were recorded, and taxa were divided into broad ecological groups following Kenward *et al* (1986). Other categories of invertebrates were noted if present. Nomenclature for beetle and bug taxa follows Kloet and Hincks (1964–77).

Lists of the invertebrate taxa and the main statistics used for the analysis are housed with the archive.

Results

The flot was very large (approximately 120 ml) and contained a substantial quantity of plant material. This consisted of (in approximate order of abundance) leaf and wood fragments, seeds, small twigs, bud scales, a few whole tree buds, moss, tiny traces of charcoal, and a few fruit stones. Invertebrate remains included an assemblage of at least 378 adult individuals of 165 beetle and bug taxa. Preservation was excellent, with a high proportion of complete sclerites and few signs of chemical erosion.

Aquatic invertebrates were abundant. These consisted of many thousands of ephippia (resting eggs) of water fleas (Cladocera: *Daphnia*), ostracod carapaces, water boatmen

Table 14. Radicarbon determination.

Lab Code	Context	Sample	Radiocarbon age (BP)	Delta C^{13}	Calibrated date (95% confidence)
Beta-198015	[150]	Wood charcoal	870±40	–26.0	cal. AD 1040–1260

Table 15. Charcoal and waterlogged wood from medieval contexts.

Context	Sample	Description	*Alnus*	*Betula*	*Corylus*	*Fagus*	Pomoideae	*Prunus*	*Quercus*	Salicaceae	*Tilia*
Mid 12th–Mid 13th centuries											
Area A1											
251	1016	Fill of pit [250] Dated 1150–1225	7	37	-	48	-	-	27h, 1r	2	-
293	1015	Fill of gully [292] Dated 1175–1225/50	6	106	-	32	3	-	33h,8r,2s	8	-
Area A2											
150	1017	Fill of hearth [149] C14 Dated 1040–1260	-	4	-	10	-	-	31h,4r	-	-
Area C2											
553	-	Wood from fill of cesspit [548]	-	-	-	-	-	-	3h	-	-
Mid 13th–Mid 14th centuries											
Area A1											
110	1001	Fill of well [10] Dated 1250–1350	-	5	-	38	-	-	7h, 3s	-	cf. 1
110	1022	Wood from fill of well [10]	-	-	4r	-	-	-	-	1r	-
Area C2											
569	1023	Wood from fill of pit [568]	-	-	-	1	-	-	2h	5r	-
573	1039	Fill of pit [572] Dated 1250/75–1325	-	3	1	10	-	-	6h, 2s	-	-
619	1045	Fill of pit [618] Dated 1250/75–1350	2	13	-	12	-	-	6h,2s	-	-
Mid 14th–15th centuries											
Area C3											
369	1031	Fill of pit [368] Dated 1375–1450	-	13	-	39	-	5	5h	-	-

Key: h = heartwood and s = sapwood (oak only); r = roundwood (diameter <20 mm)
The number of fragments identified is indicated

(Corixidae) and numerous water beetles. The 75 individuals of 16 water beetle taxa accounted for 20% of the total beetle and bug assemblage. Most common among this group were four species of *Helophorus* represented by at least 33 individuals. Many *Helophorus* species are attracted to small bodies of still water in considerable numbers. The presence of such a large aquatic component indicates that the deposit accumulated when the well held water.

Beetles found in decomposing organic material of all kinds made up 19% of the assemblage. Within this component was a small but significant group of beetles (4% of the total assemblage) typically found in accumulations of dry mouldering organic material such as would develop inside a building. This group consisted of several species of *Cryptophagus*, *Atomaria* sp., *Ephistemus globulus*, *Lathridius minutus* group, and a spider beetle *Tipnus unicolor*.

Decomposers found in foul organic material accounted for a further 6% of the assemblage. In all, 24 individuals of eight taxa were present, the most abundant being *Cercyon haemorrhoidalis* with nine individuals. This species is mainly found in dung, but also in rotting plant debris (Hansen 1987, 147). Four species of *Aphodius* were represented. These are the most frequently occurring scarabaeid dung beetles in Britain and often occur in large numbers in and around herbivore dung in the open. Some species including *A. prodromus* and *A. ater*, both recovered from the present sample, are found in foul decomposing vegetable material as well as dung (Jessop 1986). Two rove beetles represented by several individuals in the sample also belong to this group: *Philonthus laminatus* found in dung and putrid fungi (Joy 1932), and *Platystethus arenarius*.

The most commonly occurring species from among the more generalized decomposers were *Anotylus rugosus* with fifteen individuals and *Megasternum obscurum* with seven.

Grain pests were represented by a single rather eroded scrap of cuticle from a grain weevil (*Sitophilus granarius*).

Outdoor beetles and bugs (those unable to live in buildings or accumulations of decomposing material) accounted for approximately half of the assemblage, the proportion rising slightly if several probable outdoor taxa are included. This group included 24 species of ground beetle (Carabidae) in addition to aquatics, damp ground species and phytophages. The most numerous of the ground beetles were *Pterostichus melanarius,* a eurytopic species often favoured by cultivation. Others were species which exhibit more specific habitat preferences: *Pterostichus strenuus* is characteristic of the litter layer of damp woodland on clayey soil, and also of shaded sites with tall vegetation in open country (Lindroth 1986, 254); *Trechus obtusus* is found in humid often shady sites; and *Nebria brevicollis* is found in damp places with plenty of humus, mainly deciduous woodland, but also shady ground in open country (Lindroth 1985, 73, 123). Together, the ground beetles indicated an area with tall vegetation producing shade and a degree of moistness. Although trees appear to have been present on the site, the area may still have been fairly open.

Other taxa indicate the existence of distinctly damp or wet ground, and conditions may have been particularly moist close to the well. The most abundant damp ground species was *Lesteva longoelytrata* with ten individuals. Several ground beetles, all represented by a number of specimens, are typical of damp conditions: *Bembidion saxatile* found on barren, stony ground by water (Lindroth 1985, 199); *B. biguttatum* found in moist rather shady places, usually among tall vegetation, and also in open woodland among moss and leaves at the margins of pools (Lindroth 1985, 172); and *Pterostichus nigrita* which is confined to wet, well-vegetated habitats (Lindroth 1986, 251). Also present were *Carabus granulatus* and an *Agonum* species which are both hygrophilous, *Dryops* which suggests the presence of mud by water and *Georissus crenulatus* which is found in moist, sparsely covered clayey silts or sands by freshwater (Hansen, 1987, 86).

There was a diverse assemblage of plant-feeding insects (56 individuals of 38 taxa). Several of these indicated weedy vegetation: the weevil *Cidnorhinus quadrimaculatus* and the psyllid bug *Trioza urticae* (represented by nymphs), both feed on nettles (*Urtica*); *Ceutorhynchus contractus* is a small weevil that mines the leaves of crucifers; *Phyllotreta* species are generally found on crucifers but also have other hosts; *Chaetocnema concinna* occurs mainly on *Polygonum*; *Sitona* species are associated with leguminous plants; and *Psylliodes* ?*chrysocephala* feeds on brassicas. Trees or shrubs near to the well were suggested by several *Chalcoides* sp., a leaf beetle that feeds on poplars, willows and aspens (Joy 1932, 409). Other plant-feeders were either polyphagous or were not sufficiently closely determined to identify the host species.

Woodworm beetle *Anobium punctatum* (represented by eight individuals) is a common pest of structural timber, but could easily have come from dry wood on trees or ivy growing nearby. There was a single bark beetle (Scolytidae).

Sixteen individuals of five species of soldier beetle (Cantharidae) were represented. During the summer the brightly coloured adults are often found in large numbers on bushes and flowers where they prey on other insects.

Ants (Formicidae) were common among other insect remains present, and there was a tibia and first tarsal segment (with the characteristic pollen basket and pollen comb) of a honey bee (*Apis mellifera*). Flies and fly puparia were present but not particularly common.

Discussion and conclusions

The abundance of aquatic invertebrates indicates that the well contained water as the lower fill accumulated.

The presence of a small but typical dry decomposer fauna in the assemblage suggests that the well could have received some material dumped from within buildings. The type of building this may have been is problematic, particularly as many ancient buildings inhabited or used by humans would have characteristics in common with buildings used for housing livestock. Kenward and Hall (1997) identified a number of indicator groups of insects and plant macrofossils characteristic of stable manure. The key insect groups are a building fauna, grain and stored product pests, decomposers found with stored hay, and insects found in moist, open-textured, nutrient-rich decomposing material (not normally including dung beetles). In addition to the small building fauna there was a single rather rotted grain weevil *Sitophilus granarius*. The hay group of insects can be difficult to identify. Carruthers (this article) recovered several plant taxa from the same deposit (achenes of yellow rattle (*Rhinanthus*), and seeds of buttercups (*Ranunculus* spp.) and grass (Poaceae)) that would be typical constituents of hay, although as she points out, they could have come from vegetation growing around the well. Decomposers found in open-textured, nutrient-rich rotting material were probably too few to indicate that a significant quantity of stable manure entered the well, and the building fauna may have originated in material from another type of structure.

Foul decomposers recovered from the sample may have derived from dumping of foul waste which could have included both excrement and foetid vegetable material – the plant remains suggest dumping of faecal material and flax-processing waste. The abundance of *Cercyon haemorrhoidalis* in particular suggests that it either bred in dumped refuse or in foul matter such as dung deposited close to the well. *Aphodius rufipes* tends to be associated with herbivore dung in the open, although two other *Aphodius* species represented are also found in foul vegetable matter (Jessop 1986). The decomposer community as a whole could not have developed in organic material after it had been dumped into the liquid fill of the well.

The rest of the beetle and bug assemblage appears to be predominantly a natural one that would have entered the well as a 'background fauna' from the local environment. They suggest that twigs and leaves within the deposit are more likely to have accumulated gradually from trees and scrub surrounding the well than as a deliberate dump of material. Leaf beetles found on poplars, willows and aspens were present, complementing the finds of buds of willow (*Salix*) among the plant remains (Carruthers, this article). The beetles would be unlikely to remain on leaves cut for fodder or floor litter.

Leaf litter may have accumulated around the well and a number of the species represented in the assemblage typically hibernate among fallen leaves. Decomposers might have been expected to be better represented in the assemblage if leaf litter that had been allowed to rot for some time had been dumped into the well.

The habitat preferences of many of the ground beetles (Carabidae) together indicate an area with tall vegetation producing shade and a degree of moistness. Although trees were probably growing close to the well, the area may still have been fairly open. There were certainly suggestions of distinctly damp or wet areas of ground.

Weevils, leaf beetles and bugs would have fed on local plants, shrubs and trees. The leaf beetles feeding on willows, poplars and aspens have already been mentioned — they were the only phytophages of trees with specific food preferences. The most abundant plant feeding taxa suggest weedy vegetation including nettles, crucifers and *Polygonum*. The presence of flightless nymphs of the psyllid bug *Trioza urticae* indicates that stands of nettles grew close to the well.

DISCUSSION

The redevelopment of the ASDA site provided an opportunity to undertake large-scale archaeological investigation within the medieval settlement of Crawley. In the past, archaeological interventions at the southern end of the High Street have been restricted to relatively limited areas dictated by small developments or the narrow confines of road schemes (e.g. Stevens 1997; Saunders 1998). The ASDA site allowed the archaeological evaluation and targeted investigation of a significant area of the medieval town.

Despite extensive modern truncation across much of the site, a range of medieval features had survived providing evidence of occupation from the twelfth to sixteenth centuries, with limited evidence for Saxo-Norman activity. Indeed, the ditches at the extreme southern end of the site may represent the periodically re-established southern boundary of the settlement itself. Although the pottery assemblages suggest limited activity in the area prior to the grant of the market charter for the town in 1202/3 (Salzman *op. cit*), the majority of material dates from the apparent 'heyday' of medieval Crawley during the thirteenth and fourteenth centuries. The size and quality of the recovered assemblage of pottery allowed the establishment of a new set of fabric groups to be established for the town (and for this part of the Weald). In addition to this important extension of the corpus of medieval pottery from Sussex, there were other significant finds at the site.

The orientation of the ditches encountered in the southern excavation areas (A1–3) is firm evidence of the presence of plots fronting onto the medieval High Street. Although the medieval buildings on the street front have been lost to later development, as on the opposite side of the road (Stevens 1997), the refuse discarded in these areas (and indeed elsewhere at the site) is also indicative of nearby domestic activity. All of the other large areas investigated produced evidence for the incidence of nearby households (or arguably in Area C2, remains of a building itself), but here the exact locations of the streets, and their frontages in these parts of the site remain unclear. The excavation of these large areas allowed the concurrence of industrial and domestic activity in close proximity to be examined, combining known elements of Crawley's ironworking past (e.g. Saunders 1998; Stevens 2006) with remains from day-to-day living (e.g. Stevens 1997) at one site.

The presence of ferruginous Tunbridge Wells sandstone clearly utilized for stone roofing is unique within the published archaeological record in Sussex. The material was limited to area C2, suggesting the presence of a structure roofed in this way nearby and perhaps represented by the cluster of post-holes in the southern part of the investigated area (Fig. 9). This hypothesis might also be supported by the presence of a possible cesspit in the vicinity. Strangely, the noticeably soft stone would not appear to make particularly

good roofing material, and may represent a 'quick fix' using a locally available resource, or even a failed experiment.

Another local first for the site was the complete excavation and recording of a medieval well; although another well of this date was encountered on the opposite side of the High Street, it was not excavated on grounds of safety (Stevens 1997). The part manual, part mechanical excavation of the well at the current site allowed the recovery of an illuminating range of material, including a remarkable group of insect remains. The environmental evidence allowed a lucid interpretation of the process of backfilling the well. It suggested that materials including waste products from the iron industry, carpentry, and perhaps from hemp-processing were dumped into the well while it was still 'wet', along with animal dung and human excrement, which in itself provided valuable evidence of medieval diet, all of particular significance given the paucity of environmental evidence from other features at the site, and from elsewhere in Crawley. Intriguingly, a flax / hemp scotching tool was found in another waterlogged thirteenth-century feature to the north of site in 2004 (John Mills, *pers. comm.*). The medieval shoe and impressive pottery vessels from the feature completed a valuable assemblage of material from the first waterlogged deposits to be fully excavated in the town.

The environmental material from the well was clearly not the only evidence of industrial activity encountered at the site. It was unfortunate that the exact function of the two ironworking hearths remains uncertain, but they clearly form part of a group of such features which appear to have a wide distribution across the medieval town, and have been interpreted as part of the forging/smithing process at the London Road site (Cooke 2001, 156). The working-floor complex encountered at the northern edge of area C2 is broadly similar to elements of a set of features from London Road, interpreted as the remains of a workshop (Cooke 2001, 153–6). Deposition of hammerscale in area B2 also hints at the presence of a smithy/workshop in the immediate vicinity, probably immediately to the east (Figs 2 & 7).

As well as the evidence of ironworking in the form of possible structures and hearths, a large assemblage of slag was recovered. Several concentrations of ironworking waste of possible medieval date are known from the town, including areas within the boundaries of area C2 where ironworking slag had been recovered during removal of garden soil (Wealden Iron 1989, 2), and in a separate area examined immediately to the north (Saunders 1998, 83). An evaluation of an area to the northeast (the Ifield Holdings Site) did not identify any archaeological features in an area that had been heavily truncated (Stevens 2003).

A large quantity of slag was retained and examined from the London Road site (Andrews 2001) and the material from the current site appears broadly similar in character with by-products of both smelting and forging processes, despite the absence of definite evidence that smelting had been undertaken within the boundaries of either site. In addition, the London Road site appeared to have a distinct area of ironworking activity (Cooke 2001, 164), whereas the current site contained ironworking hearths at opposite ends of the site, with slag-rich features across the entire investigated area.

The archaeological evidence for the character of Crawley in this period is supported to some extent by available documentary evidence. Written sources from the late thirteenth and fourteenth centuries contain references to ironworking in the town, and it has been suggested that the town's economy was heavily reliant on the ironworking industry (quoted in Saunders 1998, 93). It is possible that the close link between this specific industrial activity and the town's general prosperity, explains the apparent decline of the town in the later fifteenth century as suggested by the ceramic evidence from the current site, and from others in the town, as well as elsewhere in Sussex. Crawley's decline appears to have been closely related to the introduction of water-powered forges in the fourteenth and fifteenth centuries and by the appearance of the blast furnace by *c* 1500 (Cleere & Crossley 1995, 104–17). Crawley lacks water, and the current site produced no blast furnace slag, suggesting a move of the focus of ironworking to other locations, and a subsequent economic downturn. However, there is clear evidence of continuity of occupation in the settlement, with a range of documentary evidence for economic activity (Hygate 2003), and the survival of early post-medieval buildings on the High Street (John Mills pers. comm.)

The apparent economic decline of many coastal settlements during the late fourteenth and early fifteenth centuries has been blamed on the combination of the Black Death and French raids (eg. at Seaford; Gardiner 1995), although it has also been suggested that this is attributable to the possible cessation of the use of urban rubbish pits at the time (Carver 1987, 69; Mark Gardiner pers. comm.). It has been argued (in relation to another recently excavated site in Seaford), that it seems unlikely that continuing occupation in the fifteenth and sixteenth centuries could have occurred without at least a small number of finds entering the archaeological record (Stevens 2004, 91). Deposits encountered at the current site demonstrate the continued use of rubbish pits in this part of inland Sussex into the fifteenth century, and perhaps as far as into the early sixteenth century, despite the economic problems inevitably caused by the shift of the focus of ironworking to riverine locations. This level of continued deposition provides potential implications for the interpretation of other sites closer to the coast, and elsewhere.

The archaeological record suggested little activity at the site between the early sixteenth century and the rapid development of this part of the town in the nineteenth and twentieth centuries, which included the founding of the Crawley and Ifield Cottage Hospital on the north side of Spencers Road (then New Road) in 1896 (Hygate 1993, 177). A broadly contemporary view shows rows of houses on both sides of Spencers Road (Hygate 1993, 178), with the church of St John the Baptist clearly visible in the background. This view, which highlights the proximity of the site to the town's medieval church has since been lost owing to the construction of tall buildings in between the two locations, but is a poignant reminder of Crawley's medieval origins.

Acknowledgements

The author would like to thank John Mills, Archaeological Officer, West Sussex County Council for his input. Thanks are also due to all the specialists who contributed to this report: Luke Barber, Samantha Crawt, Jeremy Hodgkinson, Sarah Paynter, Chris Butler, Lucy Sibun, Wendy Carruthers, Rowena Gale, Enid Allison and John Carrott, to Nadine Hygate, formerly of Crawley Museum for her advice, and to the excavation staff: Samantha Crawt, Chris Derham, Catherine Drew, David Dunkin, Henry Escudero, Peter Ginn, Fiona Griffin, Alex Langlands, Dan Lee, Tom Neyland, Paul Riccoboni, Edward Wilkinson and Dave Yates. The report was edited for publication by Louise Rayner. The project was funded by M J Gleeson Group Plc.

Author: Simon Stevens, Archaeology South-East, Units 1 & 2, 2 Chapel Place, Portslade, East Sussex, BN41 1DR.

REFERENCES

Andrews, P. 2001. Ironworking evidence, in Cooke 2001, 158–62.

Armstrong, P. & **Ayers, B.** 1987. Excavations in High Street and Blackfriargate, *East Riding Archaeologist vol.* ***8;*** *Hull Old Town Report Series No.* ***5***. East Riding Archaeological Society.

Barber, L. 1997**.** The pottery, in S. Stevens 1997, 200-4.

— — forthcoming. The pottery, in L. Barber & G. Priestley-Bell, *Medieval Adaptation, Settlement and Economy of a Coastal Wetland: the Evidence from around Lydd, Romney Marsh, Kent.*

Barton, K. 1979**.** *Medieval Sussex Pottery.* Chichester: Phillimore.

Carruthers, W. 2000. The mineralised plant remains, in A. J. Lawson & C. J. Gingell, *Potterne 1982–5: Animal Husbandry in Later Prehistoric Wiltshire*. Wessex Archaeology Report **17**, 72–84, 91–5.

— — 2003a. Appendix 7: Analysis of the plant remains in samples of waterfront sediments from Dung Quay, Plymouth, in P. Stead, Excavation of the medieval and later waterfront at Dung Quay, Plymouth, *Proc. Devon Arch Soc.* **61**, 116–22.

— — 2003b. The charred and waterlogged plant remains, in M. Rylatt & P. Mason, *The Archaeology of the Medieval Cathedral and Priory of St Mary, Coventry*. Coventry: City Council.

— — 2005a. Mineralised plant remains, in V. Birbeck, R. Smith, P. Andrews & N. Stoodley, *The Origins of Mid-Saxon Southampton: Excavations at the Friends Provident St Mary's Stadium 1998–2000*. Wessex Archaeology, 157–73.

— — 2005b. The charred and waterlogged plant remains, in N. Wells, Excavation of a Late Bronze Age enclosure site at Gatwick Airport, 2001, *SAC* **143**, 47–69.

— — forthcoming, Plant macrofossils from a medieval well and pottery kiln, Pound Lane, Canterbury, Kent. Ancient Monuments Lab. Rep. 104/90.

Cartwright, C. 1992. The excavation of a Romano-British iron-working site at Broadfield, Crawley, West Sussex, *Sussex Archaeological Collections* (hereafter *SAC*) **130**, 22–59.

Carver, M. 1987. *Underneath English Towns*. London, Batsford.

Cleere, H. & **Crossley, D**. 1995. *The Iron Industry of the Weald*. London: Merton Priory Press (revised edition).

Cooke, N. 2001. Excavations on a late medieval ironworking site at London Road, Crawley, West Sussex 1997, *SAC* **139**, 147–67.

Cox, M., Chandler, J., Cox, C., Jones, J. & **Tinsley,** H. 2000. Early-medieval hemp retting at Glasson Moss, Cumbria in the context of the use of Cannabis sativa during the historic period. *Trans. Cumb. Westmor. Antiq.*

Arch. Soc. **100,** 131–50.
Egan, G. 1998. *The Medieval Household:* Museum of London., London: HMSO.
Galloway, J. A., Keene, D. & **Murphy, M.** 1996. Fuelling the City: production and distribution of firewood and fuel in London's region, 1290–1400, *Economic History Review,* **69** (3), 447–72.
Gardiner, M. 1995. Aspects of the history and archaeology of medieval Seaford. *SAC* **133**, 189–212.
— — 1997. Background and early history, in S. Stevens 1997, 193–4.
Godwin, H. 1956. *The History of the British Flora*. Cambridge: Cambridge University Press.
Green, F. 1979. Phosphate mineralisation of seeds from archaeological sites. *Jour. Arch. Sci*. **6**, 279–84.
Greig, J. R. A. 1991. The plant remains in the Roman well fill from Droitwich, Bay's Meadow (Worcestershire). AML Rep 65/91.
Grew, F. & **de Neergaard, M**. 1988. (reprinted 2004). *Medieval Finds from Excavations in London 2: Shoes and Patterns*. Woodbridge:The Boydell Press.
Grieve, M. 1931. *A Modern Herbal*. Revised edition 1992. London: Tiger Books International.
Hansen, M. 1987. The Hydrophiloidea (Coleoptera) of Fennoscandia and Denmark. *Fauna Entomologica Scandinavica* **18**. Leiden.
Howarth, S. E. & **Williams, J. T**. 1972. *Chrysanthemum segetum*. *J. Ecol*. **60**, 573–84.
Hurst, J., Neal, D., & **van Beuningen, H.** 1986. *Pottery Produced and Traded in North-West Europe 1350–1650,* Rotterdam Papers **6**.
Hygate, N. 1993. *Wayfarer Denman's Crawley Revisited*. Crawley: privately published.
— — 2003. *The Manor of Crawley 1200–1792*. Crawley: privately published.
Jessop, L. 1986. *Handbooks for the Identification of British Insects* **5** (11). *Dung Beetles and Chafers. Coleoptera: Scarabaeoidea*. London: Royal Entomological Society.
Johnson, C. 1999. An Archaeological Interpretative Study of Bethel Chapel, Robinson Road, Crawley, West Sussex. Unpub. Archaeology South-East Report No. 1112.
Jones, G. & **Sibun, L.** 2000. An Archaeological and Historical Survey of the Bethel Chapel Graveyard, Crawley, West Sussex. Unpub. Archaeology South-East Report No. 1169
Jones, P. 1998a. Post-Roman pottery, in G. Hayman, Excavation in St Martin's Walk, Dorking, *Surrey Archaeological Collections* (hereafter *SyAC*). **85**, 85–90.
Jones, P. 1998b. Towards a type series of Medieval pottery in Surrey, *SyAC*. **85**, 211–38.
Joy, N. H. 1932. *A Practical Handbook of British Beetles*, vol. 1. Reprinted 1976. Faringdon: Oxfordshire – E. W. Classey (1976)
Kenward, H. K. & **Hall, A. R**. 1997. Enhancing bioarchaeological interpretation using indicator groups: stable manure as a paradigm. *Journal of Archaeological Science* **24**, 663–73.
Kenward, H. K., Hall, A. R. & **Jones, A. K. G**. 1980. A tested set of techniques for the extraction of plant and animal macrofossils from waterlogged archaeological deposits, *Science and Archaeology* **22**, 3–15.
— — 1986. Environmental evidence from a Roman well and Anglian pits in the legionary fortress. *Archaeology of York* **14/5**, 241–88. London: Council for British Archaeology.
Kloet, G. A. & **Hincks, W. D**. 1964-77. *A Checklist of British Insects*, 2nd edn. London: Royal Entomological Society.
Lindroth, C. H. 1985. The Carabidae (Coleoptera) of Fennoscandia and Denmark. *Fauna Entomologica Scandinavica* **15/ 1**. Leiden.
— — 1986. The Carabidae (Coleoptera) of Fennoscandia and Denmark. *Fauna Entomologica Scandinavica* **15/2**. Leiden.
London Museum, 1940. *Medieval Catalogue*.
Mepham, L. 2001**.** Pottery, in N. Cooke 2001, 162.
Mitchell, A. 1974. *A Field Guide to the Trees of Britain and Northern Europe*. London: Collins.
Pearce, J. &**Vince, A.** 1988. *A Dated Type-Series of London Medieval Pottery: Part 4: Surrey Whitewares*. London & Middlesex Archaeological Society, Special Paper no. **10**.
Prendergast, M. 1974. Limpsfield medieval coarseware: a descriptive analysis, *SyAC*. **70**, 57–77.
Rackham, O. 1976. *Trees and Woodland in the British Landscape*. Revised edition, London: J.M.Dent & Sons Ltd.
Salisbury, Sir E. 1964. *Weeds and Aliens*. 2nd edition. London: Collins.
Salzman, L. F. 1940. *The Victoria History of the County of Sussex*. Vol. 7.
Saunders, M. J. 1998. Archaeological investigations on the route of the Crawley High Street Relief Road, Crawley, West Sussex, *SAC* **136**, 81–94.
Stace, C. 1997. *New Flora of the British Isles*. 2nd edition. Cambridge: C.U.P.
Stevens, S. 1997. Excavations at the Old Post Office site, 15–17 High Street, Crawley, West Sussex, *SAC* **135**, 193–208.
— — 1999. An Archaeological Evaluation (Stage 1) at 26-36 High Street, Crawley, West Sussex. Unpub. ASE Report No. 848a.
— — 2003. An Archaeological Evaluation at the Hammerson-Ifield Site, Ifield Road, Crawley, West Sussex. Unpub. ASE Report No. 1645.
— — 2004. Excavations at 1–3 High Street, Seaford, East Sussex, *SAC* **142**, 79–92.
— — 2006. Archaeological investigations at the junction of High Street and Kilnmead, Crawley, East Sussex. *SAC* **144**, 203–7.
Straker, E. 1931. *Wealden Iron*. London: David and Charles.
Timby, J. 1998. The pottery, in M. Saunders 1998, 89–92.
Tittensor, R. 1978. A history of The Mens: a Sussex woodland common, *SAC* **116**, 347–74.
Tutin, T. G., Heywood, V. H. *et al***.** 1964–80. *Flora Europaea*, 1–5. Cambridge: Cambridge University Press.
Turner, D. J. 1974. Medieval pottery kiln at Bushfield Shaw, Earlswood: interim report, *SyAC* **70**, 47–55.
Tusser, T. 1557. *A Hundredth Good Poyntes of Husbandry*. First Published by Richard Tottel, London.
Wealden Iron, 1989. *Bulletin of the Wealden Iron Research Group*. Second Series No. **9.**
Williams, D. 1983. 16 Bell Street, Reigate: excavation of a medieval and post-medieval site, 1974–6. *SyAC* **74**, 47–89.
Woodward, D. (ed.) 1984. *The Farming and Memorandum Books of Henry Best of Elmswell, 1642*. Records of Social and Economic History New Series VIII. Oxford: OUP.