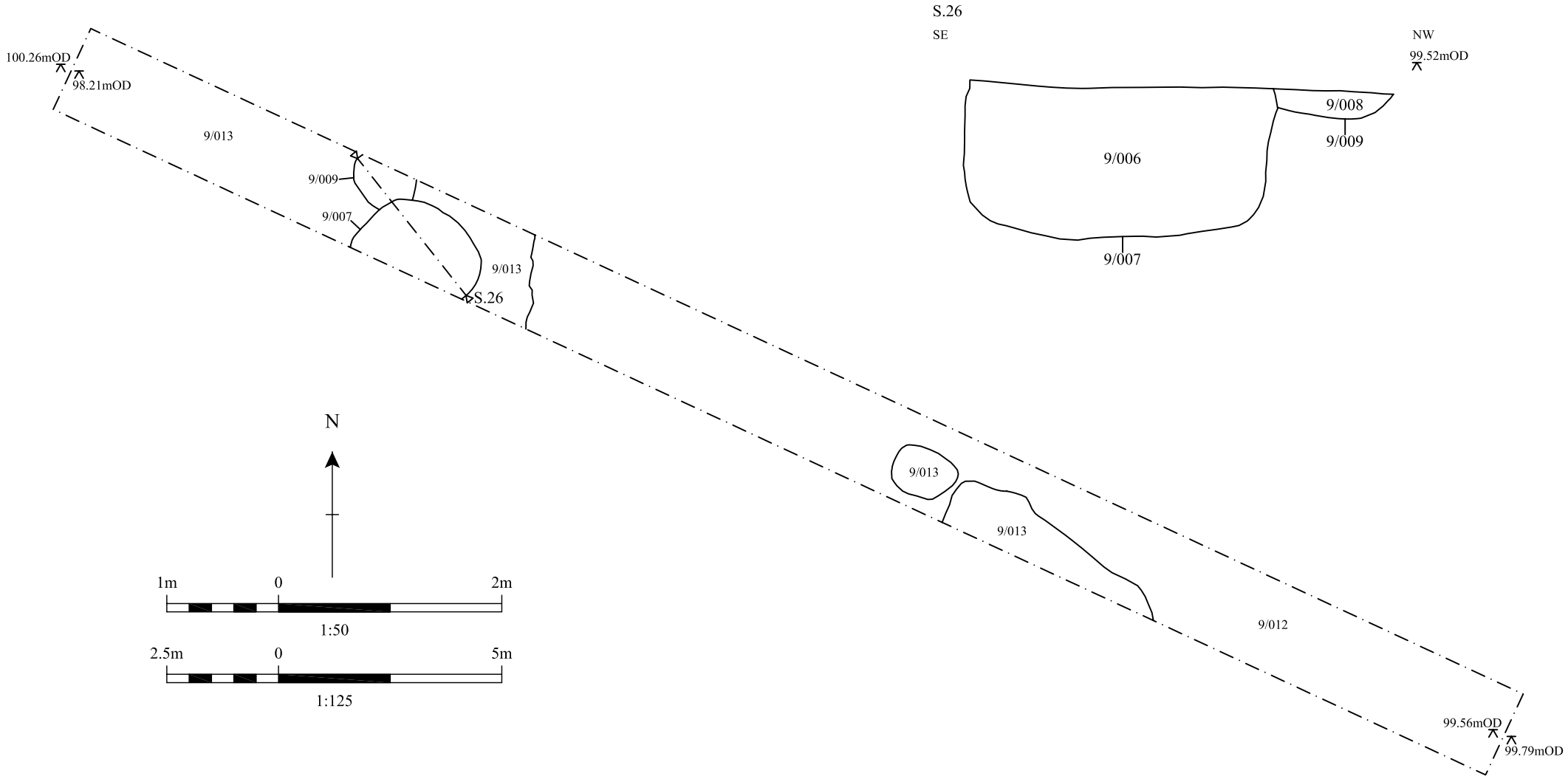

Figure 9: Trench 9: Plan (1:125) & Sections (1:25)