Northamptonshire County Council

Northamptonshire Archaeology

The Anglian Water pipeline from Clapham to Ravensden, Bedfordshire: an archaeological watching brief and excavation

January – May 2007

Paul Mason

July 2007

Report 07/117

Northamptonshire Archaeology
2 Bolton House
Wootton Hall Park
Northampton NN4 8BE
t. 01604 700493 f. 01604 702822
e. sparry@northamptonshire.gov.uk
w. www.northantsarchaeology.co.uk

REGISTERED IFA ORGANISATION

STAFF

Project Manager:	Anthony Maull Cert Arch
Fieldwork:	Jim Burke, Paul Kajewski BA, PGDip, Anthony Maull, Emma Rae BA, Mark Spalding BSc, Adam Yates BA AIFA
Text:	Paul Mason BA
Geological summary:	S R Critchley MSc
Late Iron Age pottery:	Andy Chapman BSc MIFA
Romano-British pottery:	Ed McSloy
Other finds:	Tora Hylton
Animal bone and environmental evidence:	Karen Deighton MSc
Illustrations:	Jim Burke

QUALITY CONTROL

	Print name	Signed	Date
Checked by	Pat Chapman		
Verified by	Anthony Maull		
Approved by	Andy Chapman		

Contents

Figures

Plates

OASIS REPORT FORM

PROJECT DETAILS		
Project name	The Anglian Water pipeline from Clapham to Ravensden, Bedfordshire: an archaeological watching brief and excavation	
Short description (250 words maximum)	Northamptonshire Archaeology was commissioned by Anglian Water Services to undertake a continuous watching brief over the route of a new water pipeline from Clapham to Ravensden, Bedfordshire. As a result of the watching brief parts of two previously undiscovered sites, one late Iron Age the other Romano-British, were excavated and recorded. There was no overt evidence for structures but modest assemblages of pottery were indicative of nearby domestic activity. At the Roman site evidence for gravel extraction was found in the form of a series of closely spaced ditches or elongated pits where small quantities of later 3rd/4th century coins were found. A few isolated pockets of archaeological features were also recorded along the route.	
Project type	Watching brief, excavation	
Site status		
Previous work		
Current Land use	Agricultural	
Future work		
Monument type/ period	Prehistoric/Roman	
Significant finds	Roman and Iron Age pottery, Roman coins	
PROJECT LOCATION		
County	Bedfordshire	
Site address	Clapham to Ravensden	
Study area (sq.m or ha)	5.35km pipeline	
OS Easting & Northing	TL 0362 5269 – TL 0570 5450	
Height OD	*c* 50 – 76m	
PROJECT CREATORS		
Organisation	Northamptonshire Archaeology	
Project brief originator	Bedfordshire County Council	
Project Design originator	Northamptonshire Archaeology	
Director/Supervisor	Anthony Maull/Jim Burke	
Project Manager	Anthony Maull	
Sponsor or funding body	Anglian Water Services	
PROJECT DATE		
Start date	January 2007	
End date	May 2007	
ARCHIVES	Location (BEDFM 2007.47)	Content (eg pottery, animal bone etc)
Physical		
Paper		
Digital		
BIBLIOGRAPHY	Unpublished client report (NA report)	
Title	The Anglian Water pipeline from Clapham to Ravensden, Bedfordshire: An archaeological watching brief and excavation	
Serial title & volume	Northamptonshire Archaeology Report 07/ 117	
Author(s)	Paul Mason	
Page numbers	19 text 7 figures	
Date	July 2007	

THE ANGLIAN WATER PIPELINE FROM

CLAPHAM TO RAVENSDEN, BEDFORDSHIRESHIRE:

AN ARCHAEOLOGICAL WATCHING BRIEF AND EXCAVATION

Abstract

Northamptonshire Archaeology was commissioned by Anglian Water Services to undertake a continuous watching brief over the route of a new water pipeline from Clapham to Ravensden, Bedfordshire. As a result of the watching brief parts of two previously undiscovered sites, one late Iron Age the other of Romano-British, were excavated and recorded. There was no overt evidence for structures but modest assemblages of pottery were recovered from both – perhaps indicating nearby domestic activity. At the Roman site evidence for gravel extraction was found in the form of a series of closely spaced ditches or elongated pits. A small quantity of later 3rd/4th century coins were found in the fills of these features. A few isolated pockets of archaeological features were also recorded along the route.

1 INTRODUCTION

Northamptonshire Archaeology was commissioned by Anglian Water Services to undertake a continuous watching brief over the route of a new water pipeline from Clapham to Ravensden, Bedfordshire (NGR: TL 0362 5269 – TL 0570 5450, Fig 1). The fieldwork started in January 2007 and continued until May of the same year. As a result of the watching brief two previously undiscovered sites, one of late Iron Age date the other of Romano-British date, were partially excavated and recorded (Fig 2). Localised pockets of undated archaeology were also dispersed along the route.

1.1 Topography and geology

Topography

The *c* 5.35km route of the pipeline easement is situated to the north of Bedford where it joins the villages of Clapham and Ravensden. The pipeline is aligned approximately north-east to south-west through a landscape undulating between elevations of 49.7m OD near Clapham Green and 76m OD at the route's highest point of Sunderland Hill near its north-eastern extremity.

The southern end of the route lies to the south of Clapham Green from where it follows an easterly course beside a small farm track before crossing between Clapham Golf course and Clapham Park Wood. It continues in a north-easterly direction climbing steeply to Graze Hill where it passes to the south of Gray's Hill Farm before crossing Thurleigh Road and meeting the B660 just to the north of Grange Farm Cottages. Here the pipeline crosses the road then continues in a roughly northern direction adjacent to a field boundary before terminating at the water tower north of Ravensden.

Geology by S R Critchley

The Geological Survey of England and Wales confirms that mudstones and clays of the Oxford Clay Formation of Middle and Upper Jurassic age underlie the whole of the pipeline easement. However, no exposures of the solid geology were observed during the watching brief due to

burial by later drift deposits and the limited depths of excavation available for examination. The latter can be divided into glacial tills, fluvial silts, sands and gravels and colluvium.

The tills outcrop for most of the western and eastern parts of the easement with smaller sections exposed either side of the minor road to Glaze Hill Farm. Formerly known as the "Chalky Boulder Clays" these deposits form part of the Anglian Tills deposited during the Quaternary Systems mid Pleistocene Anglian Stage Glaciation some 470000 to 375000 years BP.

Fluvial silts, sandy silts and humic clays were noted as infills of minor north south stream channels cut into the tills at a number of points along the western portion of the easement some of which also contained interbedded silty colluvium. A larger watercourse valley adjacent to Glaze Hill Farm contained a complex and partly disturbed deposit of sands, sandy silts and silty clayey colluvium mapped as overlying Oxford Clays.

The eastern facing slope running down from Glaze Hill House exposed tills for most of the easement giving way to silts and clayey colluvium as the minor road was reached. Again this lower area is mapped as being underlain by Oxford Clays, but with the limited depth of excavation none were observed.

To the east of this road within the major stream valley (underlain by Oxford Clays) outcrops of course flinty fluvial sands and gravels were seen likely to represent the eroded remains of minor former Holocene Terrace Gravels. Downslope these became increasingly finer and disturbed before burial under more recent alluvial sands and sandy silts. East of the stream the more flatter valley floor was composed of fine alluvial sandy silts and silty clays almost to the point of the minor farm track running north from Grange Farm. Here the alluvial deposits were overlain in part by silty clayey disturbed colluvium before passing into tills that continued to the eastern extremity of the easement.

1.2 Archaeological and historical background

A search of the Bedfordshire Historic Environment Record (HER) was undertaken to encompass relevant sites near to the proposed pipeline route (Table 1, Fig 2). The only site directly on the route is a series of linear cropmarks (HER 4483), probably residual ridge and furrow, situated to the east of Clapham Green.

A range of other sites are in close vicinity to the pipeline easement. In chronological order these include a large number of lithic finds dating from the Mesolithic to Bronze Age periods including a Bronze Age arrowhead (HER 15997) located where the pipeline crosses near Highfield House to the west of Graze Hill.

The pipeline also passes to the south and east of a series of undated, but possibly Iron Age and Roman curvilinear and rectilinear enclosures identified through aerial photography (HER Nos 14057, 15072, 16601, 16664, 16665 and 16666). A number of Iron Age and Roman find spots are also known in the area.

To the south-west of the pipeline, on the north-western periphery of Clapham, successive stages of archaeological fieldwork at Ursula Taylor School have recovered evidence for Mesolithic and later flint working and rectangular fields or stock pens dating to the later Iron Age (HER 17067 (not illustrated), Dawson 1988, Luke and Meckseper 1988). Medieval archaeology relating to Clapham Manor was also recorded on the same site. South-east of the pipeline an extensive multi-period artefact scatter and Roman enclosure system has been discovered to the north of Bedford at Brickhill (HER 15879, Albion Archaeology 2002). Further from the pipeline, to the north-east of Bedford, lies Mowsbury Camp, an Iron Age hillfort incorporating a timber revetment that was subsequently re-used during the medieval period (HER 332, Dring 1971, 68-69, Dawson 2000b, 118).

The medieval period is represented in the immediate area at the south-west end of the pipeline by the historic cores of Clapham Green (HER 17068) and Clapham (HER 17067), and slightly

further afield by the linear medieval settlement at Wood End (HER 17061). Other medieval activity is defined by a possible moated site at Gray's Farm (HER 93) and Ravensden Grange (HER 319), the latter belonging to the Cistercian House of Old Warden until its dissolution in the 1530s. Surviving woodland and ridge and furrow identified through aerial photography and survey is also known in the area of the pipeline easement (HER 3921 and HER 16598), defining possible destroyed medieval ridge and furrow earthworks, although evidence of pre-medieval activity may still be present in Clapham parish (HER 3921). A number of medieval find spots have also been found in the area and post-medieval buildings including farms are listed in the Historic Environment Record.

Table 1: Historic Environment Record Data

HER No	NGR (TL)	DESCRIPTION
93	0569 5471	Possible site of moat at Grays Hill farm defined by traces of moat and buildings.
319	066 559 and 067 557	Ravensden Grange (site of), Earthworks and monastic grange. No upstanding remains, but earthworks including ditches/moats and ponds are extant. Group of buildings visible until last quarter of 19th century (VCH Beds 111, 1912). Grange belonged to Cistercian House of Old Warden until Dissolution of 1530s. Not illustrated.
320	040 052	Find spot for Iron Age finds.
321	035 526	Find spot for Iron Age finds. Not illustrated
332	066 533	Mowsbury Iron Age Hillfort.
485	076 558	Course of Roman road, listed in Viatore's no 173, but not proven.
580	064 552	Cropmarks rectangular/square enclosures in field, possibility that it represents site of farm out-buildings. Horses use to graze around the site. ?? Water storage barn.
583	055 553	Manor Farm, slight suggestions of moat from drop in land from Barns, sloping slightly down before flattening out towards road. Not illustrated.
2522	0380 5280	Earthworks visible on 1st edition OS map. Not Illustrated.
3921		Ridge and furrow found throughout Clapham Parish. (some now lost to later activity). Not illustrated
3925	047 531	Clapham Park wood comprising series of angular banks and ditches closely related to the ridge and furrow. Another ditch which does not relate to the R&F may define a surviving Iron Age feature/enclosure.
4483	042 530	Cropmark series of linear cropmarks, ploughmarks and or modern ridge and furrow.
5161	067 546	Course of Roman road, continuation of HER 485 located to the south.
5877	055 544	Highfields Farm, late 16/17th century farmhouse.
5879	058 546	Graze Hill Housel, 17-18th century Farmhouse with colour roughcast thatching.
5880	057 547	Graze Hill, 17-18th century building
7008	0469 5280	Clapham Park. As shown on Bryant's map of Beds dated 1826
9540	058 547	Graze Hill Farmhouse, (Barn to rear), 19th century timber frame 4 bay barn.
9546	055 544	Highfields Farm, Graze Hill, early 20th century agricultural yellow brick building
9549	057 547	Gray's Hill Farmhouse, 19th century timber frame 9 bay shelter.
9567	072 551	Grange Farm, Sunderland Hill, site of Early 20th century Dovecote, constructed in red/yellow brick constructed in *c* 1923 by Mr Sunderland, then owner of Grange Farm. Not illustrated.

9569	071 551	Grange Farm, Sunderland Hill, site of 2 late 19th Century brick built cottages. Not illustrated.
13195	067 555	Site of Great Wood, listed as ancient woodland.
13196	068 556	Site of Little Wood, listed as ancient woodland.
14057	070 553	Cropmark of roughly D-shaped enclosure (undated). Not illustrated.
14060	068 560	Series of cropmarks linear and curvilinear ditches with complex to west extending for over 500m. Not illustrated.
15072	07553 02559	Series of cropmarks rectilinear and curvilinear enclosures some in conjoined groups extending over 500m, (undated). Not illustrated.
15879	0507 5303	Multiperiod artefact scatter, Roman enclosures, medieval activity at Brickhill (Albion Archaeology 2002)
15881	52 536	Find spot for Neolithic flint.
15882	058 536	Find spot for Neolithic flint.
15884	055 538	Find spot for Mesolithic flint.
15885	057 535	Find spot for Prehistoric flint.
15887	049 544	Find spot for Prehistoric flint.
15907	054 539	Find spot for prehistoric flint and medieval pottery sherds.
15908	058 535	Find spot for Neolithic flint.
15952	063 552	Find spot for Romano-Britsh brooch found in river bank south of Ravensden.
15997	055 544	Find spot for Bronze Age Arrowhead
16153	051 549	Find spot for Prehistoric finds and medieval pottery sherds. Not illustrated.
16586	035 535	Cropmark.
16598	043 543	Cropmark (undated) showing small irregular shaped enclosure located to the north of Grange Cottage.
16599	045535	Cropmark indicating previous woodland strip and boundary bank.
16601	045 542	Cropmark showing small irregular shaped enclosure.
16604	045 542	Cropmark possible. Not illustrated.
16664	071 565	Cropmark of polygonal enclosure (undated), abutting trackway with adjacent large rectilinear enclosure. Not illustrated.
16665	074 563	Cropmark of interconnected group of small polygonal and curvilinear enclosures. Not illustrated.
16666	075 564	Cropmark defining a sub-rectangular with possible enclosure joining at south. Not illustrated.
17061	050 552 to 061 554	Area of medieval linear settlement at Wood End within area encompassed by manor farm, next to Graze Hill in the west to Ravensden House to the east. Not illustrated.
17067	034 524	Area of medieval settlement core of Clapham. Not illustrated.
17067	034 524	Archaeological evaluation at Ursula Taylor School: Revealed Iron Age field system and medieval settlement activity dated to the 12th to 13th centuries. Not illustrated.
17068	036 528	Area of medieval settlement core of Clapham Green. (Area of archaeological sensitivity. Not illustrated.
17763	054 557	Site of water tower (Plate 1).

2 OBJECTIVES AND METHODOLOGY

2.1 Objectives

In order to examine the archaeological resource within the proposed development area the objectives of the archaeological works were to:

- Observe and record all archaeological deposits, uncovered during the groundworks for the construction of the new water pipeline and any associated groundworks
- Determine and record the date, extent, character, state of preservation and depth of burial of any archaeological deposits
- Establish the relationship of any remains found to the surrounding contemporary landscapes
- Recover artefacts to assist in the development of type series within the region
- Recover palaeo-environmental remains to determine local environmental conditions

The national framework for research is set out by English Heritage (1997). The broad research frameworks for the eastern counties of England are set out in Brown and Glazebrook (2000). The current document, however, does not include Bedfordshire but it is envisaged that future revisions will. A research framework for Bedfordshire currently exists in draft form (Oake in prep). For the purposes of the current study, the research aims set out in the Eastern counties framework will be drawn upon where relevant.

2.2 Methodology

An intensive watching brief was maintained whilst topsoil and subsoil were stripped to the natural horizon along the pipeline easement by mechanical excavator, fitted with a toothless ditching bucket. The resultant stripped area measured up to 18m wide. Archaeological features, where present, were cleaned by hand to enhance definition and sampled following the methodologies set out in the written scheme of investigation (NA 2007) to determine their date and character.

All archaeological deposits and artefacts encountered during the course of the fieldwork were fully recorded following standard Northamptonshire procedures. Archaeological deposits were given individual context numbers and were described on pro-forma context sheets. The excavated features were plotted onto an Ordnance Survey base using Leica System 1200 GPS surveying equipment (with a tolerance of generally +/- c 0.3m). These plots were used to produce detailed plans at a scale of 1:200. Sections through features and areas of complex stratigraphy were drawn at a scale of 1:10. Levels were related to Ordnance Datum.

Soil samples were taken from appropriate archaeologically significant deposits for the retrieval and assessment of environmental and economic data.

A full photographic record comprising both 35mm monochrome negatives, and colour transparencies was maintained and supplemented with digital photographs.

All works were carried out accordance with the IFA Code of Conduct (1995, revised 2002) and the Standard and Guidance for Archaeological Field Excavation (IFA 1994, revised 2001). All procedures complied with the Northamptonshire County Council Health and Safety provisions and Northamptonshire Archaeology Health and Safety at Work Guidelines.

3 THE EXCAVATED EVIDENCE

3.1 Overview

The route of the pipeline passed through two previously unknown archaeological sites, which were excavated and recorded during the course of the watching brief. The first, characterised by ditches and gullies of late Iron Age date, lay to the north-east of Cottage Farm (TL0409 5309, Fig 2 and Fig 3). The other, a Romano-British site, is located to the south-west of Ravensden (TL 0603 5408, Fig 2 and Fig 5). In addition, isolated features were discovered in four locations and two spot finds were made by metal detector survey (Fig 2).

3.2 The late Iron Age site

Features of late Iron Age date were revealed where the pipeline easement passed through an arable field to the north-east of Cottage Farm (Fig 3). The features were clustered in a *c* 65m-long strip in a hollow defined by rising ground to the north-east and south-west. The geology in this area, which comprised boulder clay and patchy sand (103), was overlain by up to 0.80m of orange brown subsoil (105) and 0.40m of mid-brown topsoil (101). At the very base of the hollow a mid-grey silty clay colluvium (106) was present below the subsoil.

The principal feature was a *c* 5m-wide curvilinear ditch [122] that cut the natural boulder clay on an approximate east-west alignment. It was 0.70m deep, had a shallow concave profile and was filled with a dark grey silty clay (123) that contained charcoal fragments, animal bone and pottery of late Iron Age date (Fig 4, Section 7). The ditch may have formed part of a boundary or enclosure. The only features north-east of it were a small pit [132] and gully [134], overlain by a spread of clay and pebbles (124). The pit fill (133) contained pottery contemporary with the material from the ditch.

The main focus of activity appears to have been to the south-west of the principal ditch where there was a configuration of smaller ditches, gullies and pits. A smaller curvilinear ditch [155] swung out from the southern edge of the pipeline easement to terminate at its centre [129] (Plate 2). This ditch was up to 1m wide, 0.75m deep and had distinct greyish-brown silty clay fills (156) and (157). Cutting these was a second ditch [125/152] measuring *c* 1.50m wide and 0.75m deep, and aligned westwards (Fig 4, Section 8). Its primary fill was a mid grey brown clay (128) overlain by a light grey silty clay (127) containing late Iron Age pottery. This was sealed by an upper fill of dark brown silty clay (126).

To the immediate south-west of these ditches were two intercutting gullies [137] and [139/150]. The former curved westwards from the south-eastern side of the easement, terminating at its centre in a pit [146]. Pottery retrieved from the pit fills (147), (148), (149) comprises some of the later forms within the assemblage and date through to the pre-Roman mid-1st century AD. A significant quantity of charred cereal grains were also recovered from one of the fills (149). The second of the two intercutting gullies [139/150] was aligned roughly east-west (Fig 4, Section 11). It was up to 1.50m wide, 0.35m deep and filled with mid-yellowish brown silty clay (140/151) which also contained pottery spanning the transition between the Iron Age and Roman periods. This gully appeared to taper out to the west.

The other features associated with this site were two large pits or depressions to the south-west of the ditch/gully complex. The largest of them [141] had a width in excess of 7m. It was *c* 0.60m deep and was filled with four separate deposits (142-145) (Fig 4, Section 16).

3.3 The Romano-British site

Features of 1st to 3rd-century Romano-British date were revealed where the pipeline easement passed through an arable field to the north-west of Ravensden (Fig 5). The features were spaced over a *c* 100m-long strip that cut through flattish topography lying approximately 75m south-west of a small stream. The geology in this area comprised boulder clay (227) to the south-west, sandy

clay (228) in the central area and gravel (229) to the north-east. Geology was overlain by up to 0.15m of orange brown subsoil (226) and 0.30m of grey-brown topsoil (225).

A wide linear ditch [187/208] aligned roughly east-west against the southern edge of the easement was, stratigraphically, the earliest feature. At its western end it appeared to turn sharply to the north, perhaps forming the corner of an enclosure. Where excavated its depth was only 0.2m and its fill was a dark greyish brown silty clay (188) containing pottery dating from the later 1st century AD.

The main area of activity was superimposed over this early feature. It was characterised by a cluster of gullies and pits flanked by a pair of perpendicular, north-west to south-east aligned ditches [207] and [193] spaced some 23m apart. Both were *c* 0.70m deep and filled with orange brown gravel-flecked clay (168) and (195). Ditch [193] had a secondary fill of mid-grey brown silty clay (194) containing 2nd to 3rd century pottery sherds. Ditch [207] had subsequently been re-cut resulting in a 1.70m-wide, 0.70m deep ditch [166] filled with orange brown silty clay (167) (Fig 6, Section 19).

Three gullies [179], [200] and [203] and six pits [169], [171], [173], [177], [185], [210] and [212] were present between the ditches. Stratigraphically, the earliest of these features was curvilinear gully [179] which was 1m wide and 0.20m deep. It was filled with a mid-grey silty clay (180) which was subsequently cut by pits [169] and [214] and gully [203]. The latter, aligned north-east to south-west, curved northwards and terminated towards the centre of the easement. It was 1.00m wide, 0.25m deep and filled with a grey clay (204) similar to that observed in the earlier gully. To the north-east of this the third gully [200] protruded from the northern edge of the trench before terminating. It was of similar proportion to the others and had a similar clay fill (201).

The pits clustered around (and in some instances cutting) these gullies were typically over 1m in diameter and up to 0.90m deep with dark silty clay fills. Pottery of predominantly later 2nd- to 3rd-century date was recovered from this group of features. A shallow, irregularly-shaped feature [210] close to pit [212] was probably a tree bole.

The only feature to the south-west of this group, beyond ditch [207], was a large roughly circular pit [163]. Its diameter exceeded 5m and a section near to its edge was dug to a depth of 0.60m. The primary fill (165) was a compact light bluish clay. Sealing this was a dark grey silty clay (164) containing sherds of late Roman pottery and a single, presumably intrusive, sherd of Anglo-Saxon cooking pot.

To the north-east of the main concentration of features were a series of thirteen north-west to south-east aligned ditches or elongated pits. Sections through three of them [175], [183] and [205] revealed 'U'-shaped profiles measuring *c* 1.50m in width and 0.75m in depth (Fig 6, Section 31). They were filled with gravel-flecked silty clay containing pottery spanning the 1st to 3rd centuries; the earlier sherds are likely to be residual. Four coins of the mid-3rd to mid-4th centuries were also recovered from these features which are thought to have been dug to extract river terrace gravels deposited by the stream which flows to the immediate north-east.

Many of the archaeological features were cut by a previous water pipe trench which was exposed along the northern edge of the easement.

3.4 Isolated features and metal detector finds

North-east of Clapham Green towards the south-western end of the pipeline route (TL 0403 5302) a single gully [160] was observed crossing the easement on a east-west alignment (Fig 2). It was 1.10m wide and 0.25m deep and had two orange brown silty clay fills (161) and (162). There was no dating evidence but significant quantities of charred cereal grains were recovered from soil samples taken from this feature. Less than a kilometre to the north-east a ditch [120] was aligned north-west to south-east. It had a width of 1.40m, a depth of 0.75m and was filled with a charcoal-flecked dark grey silty loam (121) containing Iron Age pottery. Two small

postholes [116] and [118] were found close to this. Roughly 100m to the north-east of the Iron Age site, an isolated pit [114] contained contemporary sherds of pottery. Still further to the north-east were two more pits {110] and [112], the latter also containing late Iron Age sherds in its fill (113).

A small quantity of stray finds were also recovered along the route including two fragments of a copper alloy bracelet recovered from subsoil to the south-west of the Iron Age site in the vicinity of ditch [120]. An early post-medieval copper alloy shoe buckle (SF8) was found by metal detector on the pathway leading to the gate of Highfield House (TL0505 5403).

4 THE FINDS

4.1 **The Iron Age pottery** by Andy Chapman

A small assemblage comprising 218 sherds of pottery, weighing 4645g, was recovered from the Iron Age site. The assemblage comprises a mixture of hand-built vessels dated to the late Iron Age, 1st century BC into early 1st century AD, and groups that also include wheel-finished or wheel-thrown vessels of the late Pre-Roman Iron Age, the early to middle decades of the 1st century AD. It would therefore appear that occupation at this site began in the 1st century BC and continued into the middle decades of the 1st century AD, but no later than this.

Condition

The pottery came from seventeen contexts, but nine of these produced no more than ten sherds, weighing less than 200g. Only eight contexts produced more substantial groups, with the largest (context 124, layer) producing 46 sherds while the heaviest (context 142, fill of pit [141]) weighed 925g. The average sherd weight of 21.3g reflects the primary nature of much of the material, which is fragmented but fresh and unabraded, with groups typically containing multiple sherds from a limited number of vessels. The high average sherd weight also reflects the high incidence of sherds from thick-walled storage jars, with body walls up to 12mm thick.

Fabric

The pottery has been sorted by fabric and quantified by sherd count and weight, and the fabrics have been listed according to the Bedfordshire pottery type series (Slowikowski 2000, and Parminter and Slowikowski 2004) (Appendix 1). The assemblage is dominated by vessels containing shell (Fabric F07), with this varying from dense larger shell inclusions in the larger storage jars to sparser small shell inclusions in the smaller jars. The bulk of the assemblage is presumably locally produced, but there are a small number of vessels containing shell and grog (Fabrics F08), grog and shell (F05), just grog (F06) or flint (F01), all of which appear in isolated vessels, presumably local or regional imports.

Forms, decoration and chronology

The small groups of plain body sherds can be only broadly attributed to the Iron Age, but these are similar to the larger groups, and can be assumed to be of the same late Iron Age date. There are no characteristics to suggest an origin in the middle Iron Age. The majority of the assemblage comprises hand-built vessels ranging from smaller jar forms up to large storage jars. Characteristic late Iron Age forms, dating to the 1st century BC, include a rounded bowl with an everted rim, black throughout and with a burnished surface (context 119, fill of posthole [118]). The same deposit, and others (contexts 115, 124, 130, 133 and 135), also include thick-walled storage jars with oxidised surfaces and decorated with simple incised line decoration. Otherwise, decoration on late Iron Age vessels was restricted to two vessels (contexts 115, fill of pit [114] and 124, layer) with closely-spaced finger-tip and fingernail impressions along the top of the rims.

Characteristic vessels dating to the 1st century AD include channel-rim jars (contexts 123, fill of ditch [122] and 148, fill of pit [146]), a fine cordoned bowl (context 148) and storage jars with

combed decoration (context 142, fill of pit [141]). The lack of Roman vessels indicates a termination of occupation in the middle decades of the 1st century AD, although a single context (128, fill of ditch [125]) produced part of a wheel-thrown dish and an irregular sherd in a white-ware fabric.

4.2 **The Romano-British Pottery** by E R McSloy

Summary

A small assemblage amounting to 125 sherds (2594g) was recovered from 21 separate contexts. Additional quantities of ceramic tile were also identified (Appendix 2). The pottery derives primarily from linear features and occurs as small groups of sherds (to a maximum of 39). The larger part of the pottery is characteristic of the earlier Roman period (1st to 2nd centuries), with smaller quantities dateable to the Late Roman period, after *c* AD 250/270. A single handmade sherd is provisionally dated to the Early/Middle Anglo-Saxon period.

For the purposes of assessment the pottery was sorted by fabric and quantified by sherd count, weight and rim EVEs. Vessel form where identifiable was also recorded and such attributes as abrasion and evidence for use noted.

Condition

The assemblage appears to be fairly heavily fragmented and well dispersed with large or joining sherds. Average sherd weight (20.8g) is high for a Roman assemblage although this is undoubtedly skewed by the presence of thick-walled storage jar and amphorae sherds. Surface preservation is typically good, though abrasion was notable in some instances (Appendix 3).

Range and Variety

Pottery fabrics, including concordance with the Bedfordshire pottery type series (Parminter and Slowikowski 2004) and National Roman Fabric Reference Collection codes (Tomber and Dore 1998), are set out in Appendix 2. The majority of material, including shell-tempered wares and sandy reduced wares, are local or derive from the Upper Nene Valley, approx 30km to the north. The shell-tempered group certainly contains products from the kilns at Harrold, North Bedfordshire, in operation throughout the Roman period (Brown 1994). Regional imports, including material from Hertfordshire, Oxfordshire and the Lower Nene Valley are present in relatively small amounts, primarily from later Roman contexts. Continental imports are present as South Gaulish and Central Gaulish samian and a sherd single Baetican (southern Spanish) amphora.

Identifiable (Roman) pottery forms are listed in the catalogue (Appendix 3). The majority comprise jars of various types, with fewer bowls, dishes mortaria, flagons and beakers.

A single body sherd, provisionally identified as of Anglo-Saxon date, is undecorated. Its fabric would suggest a non-local origin. Use as a cooking pot is indicated by carbonised residues to the inside of the vessel.

Chronology

Reliable assessment of dating is hindered by the small size of context groups. Earlier Roman dating, between the mid/later 1st century to the 2nd/early 3rd centuries, is applicable to the majority of pottery. Channel-rimmed jars (6 vessels) in shell-tempered fabric (BTS R13) are common elements among the earlier group. Such vessel forms originate in the late Pre-Roman Iron Age (Friendship-Taylor 1999, 13–15), their use extending as late as the late 2nd/early 3rd centuries. Upper Nene white-firing fabrics (BTS R03B, HCG), Verulamium region whiteware (BTS R03A) and a mica-dusted ware (MICA D) date to between the later 1st and 2nd centuries. A South Gaulish samian vessel from ditch fill 209 is Flavian (*c* AD 69–96) in date. The majority, Central Gaulish, samian is dateable to the 2nd century, with a Drag 31 bowl from pit fill 213 dating to after *c* AD 160. Quantities of earlier Roman material, including sherds in 'Belgic' type

fabrics (BTS F06) from pit fill 165 and ditch fills 182 and 176 and channel-rimmed jar from ditch fill 176, are residual in later contexts.

Late Roman material, dating after *c* AD 250/270, occurs as Oxfordshire red-slipped (BTS R11D) and white colour-coated wares (OXF WS), and as certain forms in Lower Nene Valley colour-coated ware (BTS R12B) and shell-tempered wares (BTS R13). A disc-neck flagon in a local greyware fabric BTS R06 may be of 3rd-century date, its form reminiscent of Lower Nene Valley colour-coated ware forms (Howe et al 1980, no 67, 22). Some forms, including a mortarium sherd of Young's type WC 6.1 (Young 1977, 122) and flanged bowls/hooked-rim jars in Harrold shell-tempered ware (Brown 1994, 69–78) are suggestive of activity continuing into the second half of the 4th-century.

Broad dating, between the 5/6th and 8th centuries AD, is presumed for the one Anglo-Saxon sherd on the basis of its fabric and method of manufacture.

Statement of potential/recommendations for further analysis

The pottery assemblage, whilst offering evidence for the broad date span of Roman activity, is small in size and unexceptional in character. Recording undertaken for this assessment is considered to be adequate for the purposes of the archive and further detailed analysis is not recommended.

4.3 **The other finds** by Tora Hylton

The watching brief produced 22 individually recorded late Iron Age/Roman and post-medieval finds. The majority (14) were recovered from stratified deposits associated with areas of late Iron Age and Romano-British occupation. In addition three Roman finds were recovered from other areas along the route of the pipeline and five finds were recovered from topsoil deposits.

The range of finds is small and comprises six coins, two bracelet fragments, a lead pot repair, together with two nails and undiagnostic fragments of iron and copper alloy sheet.

Iron Age site

Seven objects were recovered. They include a parallel-sided copper alloy strip ornamented with eight longitudinal grooves from ditch [123], which may be part of an ?armlet. An undiagnostic sheet fragment came from gully [126] and two nails and five undiagnostic fragments of iron from layer [124].

Romano-British site

The Roman site produced seven objects; these comprise five copper alloy coins and two undiagnostic fragments of iron. The coins were recovered from features close to the north-eastern edge of the site (ditches 175, 183, 205, 208). Although partially illegible they have been identified by Ian Meadows, who has dated them to the 3rd/4th centuries.

Table 2: Coin identification

	Identification	Date	Context Description
	AE 3/4 Constantine I, barbarous Gloria Exercitvs (2 soldiers/2 standards) Trier mint	330-335	Context 209m, fill of ditch 208
	Barbarous radiate (illegible)	Mid 3rd century	Context 184, fill of ditch 183
	Barbarous radiate (illegible)	Mid 3rd century	Context 176, fill of ditch 175
	AE4 – 2 victories facing issue	Mid 4th century	Context 206, fill of ditch 205
	AE4 – illegible	4th century	

Other artefacts were recovered from other areas along the route of the pipeline; they include an unstratified 4th century coin (House of Constantine), recovered to the north-east of the Iron Age Site, and two copper alloy bracelet fragments were recovered from subsoil to the south-west of the Iron Age site (Context 105,). The bracelet fragments join together to form a 'ribbon-strip' type bracelet ornamented with a central panel of longitudinal grooves and closely set oblique notches. Stylistically it displays similarities to an example from the Verulamium, St Albans (Waugh and Goodburn 1972, fig 32, 31) which dates to *c* AD85-105.

Finds of post-medieval date include a 16th/17th century buckle, an iron horseshoe with thickened calkin, a copper alloy plate with countersunk holes and a perforated disc; all were recovered from topsoil deposits.

5 THE ANIMAL BONE AND ENVIRONMENTAL EVIDENCE

5.1 **The animal bone** by Karen Deighton

Method

A total of 7080g of animal bone were hand recovered from a range of features during the course of the watching brief. These were scanned to determine the species present, state of preservation and to assess the potential for future work. Identifiable bones were noted. Ageable and measurable bones (after Von Den Driesch 1976) were also noted. Ageable elements included cheek tooth rows, bones where the state of fusion is apparent and neonatal bones. Animal bone from wet sieving (3.4mm and 1mm residues) was also included; sample sizes varied with context but were typically between 20 and 80 litres. Hand collected bones had previously been washed.

Results

Preservation

Fragmentation was moderate and largely attributable to old breaks.

Surface condition was reasonable. Evidence for canid gnawing was moderate with six instances noted. Only three examples of burning were observed. Four possible instances of chopping and knife marks were noted.

Taxonomic distribution

Sixty-six identifiable fragments of animal bone were recovered including 24 cattle bones, 22 ovicaprid, seven horse, four pig and one dog bone. They were distributed without significant groupings between the Iron Age and Romano-British site.

Ageing and Measurements

A single neonate ovicaprid bone was noted in Iron Age context (context 115, fill of pit [114]). Twenty nine bone elements and teeth (12 cow, 2pig, 5 horse and 10 ovicaprid) were available to provide age data. A small suite of 33 measurements would also be obtainable, but too few to allow any discussion of stature.

Potential

The scope of further work is limited by the small amount of material recovered.

5.2 **The environmental evidence** by Karen Deighton

Method

Thirteen samples were hand collected from a range of contexts during the course of excavation. All samples were processed using a siraf tank fitted with a 500-micron mesh and flot sieve. The resulting flots were dried and analysed using a microscope (10xmagnification). Assessment was

undertaken to establish the nature, preservation and presence of ecofacts and their potential contribution to the understanding of the function and economy of the site

Results

Preservation

Preservation was exclusively by charring.

Taxonomic distribution

Cereal grains, present in greater numbers from samples taken from the Iron Age site (Table 3), were largely wheat/barley type and included Hulled barley (Hordeum vulgare). The greatest number of charred grains was present in context 162, fill of undated gully 160, one of the isolated features not associated with either site.

The wild/weed taxa included fat hen (Chenopodium album), sheep sorrel (Rumex acetosella) and possible chess (Bromus arvensis); all are common weeds of cultivation.

Mollusc taxa were largely Ceciliodes asicula, an intrusive species.

Table 3: Environmental evidence: Iron Age and undated features

Sample	Volume (litres)	Fill/cut	Date	Charcoal*	Cereal	Wild/weed	molluscs	other
1	20	111/110	IA?	10	1	5		
2	20	123/124	IA		6	4	49	nutshell
3	10	128/125	IA	6	9	5	3	
4	10	149/146	IA	5	72	21	20	
5	10	162/160	undated	6	163	1		

Table 4: Environmental evidence: Romano-British features

Sample	Volume (litres)	Fill/cut	Date	Charcoal*	Cereal	Wild/weed	molluscs	other
6	20	164/163	RB	6		28		
7	20	165/163	RB	5	1	14		
8	20	167/166	RB	1		6		
9	20	168/207	RB	1	1	11		
10	10	178/177	RB	2	3			
11	10	180/179	RB	6	4	20		
12	20	206/205	RB	1	1	24		
13	20	176/175	RB	1		60	31	

*Key += present,1=2-10,2=10-20,3=20-30,4=30-50,5=50-100,6=100-200,7=200-300,8=300-500,9=500-1,000,10=1,000+

Potential

All samples produced some ecofacts. Charcoal fragments were too small to permit further identification. The value of work on Romano/British samples is limited by the small amounts of material. Further work on Iron Age samples is limited by the small number of samples collected.

6 CONCLUSION

As a result of the watching brief two previously unknown archaeological sites were discovered, one dating to the late Iron Age, the other to the mid-Roman period. In addition and a small number of isolated features, perhaps elements of nearby settlements or ancient field systems lying outside the pipeline easement were also recorded. An assessment of the significance of the archaeology is limited by the narrow 'window' that the easement provides; nevertheless, certain tenuous interpretations can be offered.

The ditches, gullies and pits associated with the late Iron Age site appear to represent a single phase of activity dating from the 1st century BC to the pre-Roman mid-1st century AD. It is conceivable that the principal feature, a 5m-wide curvilinear ditch, may have defined a partial enclosure, perhaps bounded on its south-western side by a now-relict water channel flowing in the base of the hollow. Although there was no evidence for structural remains, the ceramic assemblage, which comprised mainly of unabraided sherds from storage jars and dishes, suggests that domestic activity was taking place in the near vicinity.

In contrast, the Romano-British site, located some 1.7km to the north-west, appears to have two definable phases spanning the later 1st to late 3rd /early 4th century. The earlier is represented by a substantial ditch which turns within the easement, perhaps to define the corner of an enclosure. Pottery found in the fill of this feature dated from the late 1st century AD. A second phase of activity, perhaps characterised by a second enclosure defined by shallower gullies, was superimposed over this. Pottery from features associated with the gullies dates to the later 2nd/3rd centuries with forms, including regional and continental imports, suggestive of nearby domestic activity. There was, however, no overt structural evidence within the easement.

Features peripheral to the main cluster of features included a large pit containing a sherd of (presumably intrusive) Anglo-Saxon cooking pot; the pit had been disturbed by the present water pipeline trench. On the opposing north-western side of the site, thirteen closely spaced north-west to south-east aligned ditches or elongated pits may provide evidence for gravel extraction. A series of similarly proportioned features were discovered at a loosely contemporary site at Brickhill, 1.7km to the south-west (Albion Archaeology, 2002). The discovery of four later 3rd/4th century coins within their fills is of some interest and provides a chronological terminus for the site.

Environmental samples and animal bone assemblages from both sites were limited in number, providing little scope to address the palaeo-environmental objectives of the project. It is worth noting, however, that charred cereal grains were more numerous in samples taken from the Iron Age site and were negligible in those from the Roman features.

Nothing was found to elucidate the nature of the linear cropmarks (HER 4483) that the easement crossed towards its southern end. Undated ditch [160] was located a short distance to the north of their mapped position but was remarkable only in so much as its fill contained the largest concentration of charred grains recovered during the fieldwork.

Both sites sit within a landscape smattered with cropmarks that are assumed to broadly contemporary with the archaeology found along the easement. In a local context, the most significant contemporary monument for the Iron Age site is Mowsbury Hillfort which lies some 1.8km to the south-west. The Romano-British site is one of a number that exist in the local area, the closest excavated example being located to the south at Brickhill.

BIBLIOGRAPHY

Albion Archaeology, 2002 *Land at North Brickhill, Bedford, Bedfordshire*, Archaeological field evaluation report **2007/74**

Brown, A, 1994 A Romano-British shell-gritted pottery and tile manufacturing site at Harrold, Bedfordshire, *Bedfordshire Archaeology*, **21**, 19–107

Brown, N and Glazebrook, J, 2000 *Research and archaeology. A framework for the Eastern Counties 2. Research agenda and strategy*, East Anglian Archaeology occasional paper **8**

Dawson, M, 1988 Excavations at Ursula Taylor Lower School, *Bedfordshire Archaeology*, **18**, 6-24

Dawson, M, 2000a *Prehistoric, Roman and post-Roman landscapes of the Great Ouse Valley*, Council for British Archaeology Research Report **119**

Dawson, M, 2000b *The Iron Age and Romano British period: a landscape in transition*, in M Dawson 2000a, 107-130

Dawson, M, 2000c Iron Age and Roman settlement on the Stagsden Bypass, *Bedfordshire Archaeology Monog*, **3**

Dawson, M, 2004 *Archaeology in the Bedford Region*, Brit Archaeol Rep Brit Ser **373**/Bedfordshire Archaeology Mono, **4**, Oxford

Dring, G J, 1971 Iron Age Pottery from Mowsbury Camp, Ravensden, near Bedford, *Bedfordshire Archaeological Journal*, **6**, 68-69

English Heritage, 1997 *English Heritage Archaeology Division Research Agenda* (Unpublished draft)

Frere, S, 1972 *Verulamium Excavations*, Vol I, Society of Antiquaries of London

Friendship-Taylor, R, 1999 Late La Tène Pottery of the Nene and Welland Valleys, Northamptonshire: with particular reference to Channel-rimmed jars, *British Archaeology Report British Series*, **280**, Oxford

Geological Survey of England and Wales Sheet 203,1:63360 scale, drift edition 1900

Howe, M D, Mackreth, D F and Perrin, J R 1980 Roman Pottery from the Nene Valley: a Guide, *Peterborough City Mus Occ Paper*, **2**

IFA 1994, revised 1999 *Standards and Guidance for Archaeological Excavations*, Institute of Field Archaeologists

IFA 1999 *Standards and Guidance for an archaeological watching brief*, Institute of Field Archaeologists

IFA 1985 (revised 2000) *Code of Conduct of the Institute of Field Archaeologists*, Institute of Field Archaeologists

Luke, M and Meckseper, C, 1988 Clapham (note), *South Midlands Archaeology*, **28**, 7

Parminter, Y and Slowikowski, AM, 2004 *The Ceramics Assemblage*, in Dawson 2004, 442-503

Slowikowski, A M, 2000 *The Coarse Pottery*, in M Dawson 2000, 61-84

Tomber, R and Dore, J, 1998 *The National Roman Fabric Reference Collection: a handbook London*, Museum of London Archaeology Service

Waugh, H, and Goodburn, R, 1972 *Objects of Bronze*, in S Frere 1972, 114-145

Von den Driesch, A, 1976 *A guide to the measurement of animal bone from Archaeological sites*, Harvard: Harvard University press

Young, C J, 1977 Oxfordshire Roman Pottery, *British Archaeology Report British Series*, **43**

APPENDICES

Appendix 1: Quantification of Iron Age pottery

Context	Sherds	Weight (g)	Fabric code	Fabric description	Vessel forms	Date
113	32	115	F05	Grog & shell	All plain body sherds	IA
115	5	40	F07	shell	1 incised dec'n finger-tipped impressed rim	IA
117	7	70	F07	shell	Plain body	
118	8	260	F07	shell	Everted rounded rim, burnished bowl Smoothed to burnished body (all black). Body, thick-walled storage, double incised line dec'n (oxidised surface)	LIA
121	3 5	40 50	F07 F01	Shell flint	Plain body Plain body	IA
123	1 4 13	50 230 415	F06 F01 F07	Grog Flint shell	base channel-rim jar channel rim jar large storage jar cordoned bowl	LPRIA
124	46	730	F07	shell	Thick-walled storage (some incised line dec'n) Finger-nail impressed rim Burnished body (black)	LIA
127	3	350	F07	Shell	Handle from storage jar	LPRIA
128	5	100			Base, wheel-made	LPRIA/E Roman
130	2 2	110 80	F07 F08	Shell Shell & grog	Thick-walled (incised dec'n)	LPRIA
133	24	340	F07	shell	Thick-walled (incised dec'n) Jar (fine sparse shell)	LPRIA
135	19	300	F07	Shell	Thick-walled (incised dec'n)	LPRIA
140	11 1	110 5	F07 F02	Shell sandy	Shelly body sherds. Thin-walled	LPRIA E Roman
142	15	925	F07	Shell	Thick-walled shelly storage Fine shelly, combed dec'n	LPRIA/ E Roman
147	1	10	F07	Shell	Body	
148	10	165	F07	Shell	Thick-walled shelly storage Channel-rim jar jar (oxidised)	LPRIA/ E Roman
149	1	60 90	F07 F06	Shell grog	Oxidised storage	
TOTAL	218	4645	Average 21.3g			

Appendix 2: Quantification of Roman pottery

Fabric	BTS* code	NRFRC†	Description	Sherds	Wt(g)
GROG	F06	-	(local) grog-tempered	5	177
GROG SH	F05	-	(local) Grog with shell	14	165
SH	R13	-	(local) shell tempered ware	34	1210
LOC BS	R07B	-	(local) black sandy coarseware	18	165
LOC GW	R06	-	(local) reduced sandy, grey	32	347
LOC BUF	R10B	-	(local/Upper Nene) buff oxidised	3	8
LOC WH	R03B	-	(local/Upper Nene) gritty white	1	9
HCG	-	-	(Upper Nene) hard cream grogged	1	13
MICA D	-	-	?Upper Nene mica-dusted fineware	1	22
LNVCC	R12B	LNV CC	Lower Nene valley colour-coated ware	6	192
OXF RS	R11D	OXF RS	Oxfordshire red-slipped ware	1	5
OXF WS	-	OXF WS	Oxfordshire white colour-coated ware (mortaria)	1	28
VRW	R03A	VER WH	Verulamium region whiteware	1	22
LEZ SA	R01A	LEZ SA	Central Gaulish (Lezoux) samian	4	45
SG SA	R01B	LGF SA	South Gaulish (La Graufesenque) samian	1	17
BAT AM	R19A	BAT AM	(import) Baetican amphora	1	157
SAX IG	-	-	Coarse ?igneous rock inclusions	1	12
Total				125	2594
SH TILE	-		Shell-tempered tile (Harrold, Beds)	3	117

* Bedfordshire pottery type series codes
† National Roman Fabric Reference Collection codes (Tomber and Dore 1998)

Appendix 3: Roman pottery records

Context	Spot-date	Fabric	Count	Weight	Form	Number	EVEs	Comments
164	C3-C4+	LNVCC	1	1				abr
		LOC GW	1	34	JN	1	.07	Necked jar. abr
		?SAX IG	1	12				Burnt food residue
165	C2-C4	SH	2	35				
		GROG	1	21				
		LOC GW	3	16				
		LOC BS	1	3				
167	LC1-C2	LOC BUF	3	8				
		LOC GW	11	79	JN CUR	1	.20	Jar, necked with cordons
		GROG SH	11	124	JLS	2	.42	Channel-rimmed jar
		SH	1	32				
		GROG	1	6				
		LOC BS	12	77				
170	RB	SH	1	17				
		LOC GW	1	28				
174	C4	SH	8	181	JN FT	1	.06	Jar, necked (Harrold form)
		SH			BFL	1	.07	Harrold form - large flanged bowl with scored wavy to upper
		SH TILE	2	60				
176	C3+	SH	4	89	JLS	1	.08	Channel-rimmed jar. Sooted ext
		LOC GW	2	10				
		GROG	2	138	JNCUR	1	.05	Jar, necked
		LNVCC	1	48				
178	C3+	LOC GW	1	46	FDN	1	1	Flagon, disc neck
		SH	2	529	JST	1	.12	Large stor. jar
180	MC3-C4	GROG SH	1	19				
		SH	1	4				
		LOC BS	1	9	DPR	1	5	Plain-rimmed dish
		OXF RS	1	5	M WS	1	5	Mortarium, wall-sided
		LNVCC	1	5				
182	MLC4	LOC GW	1	6				
		GROG	1	12				
		LEZ SA	1	9	Dr37	1	.04	Drag 37 bowl
		SH	1	31				
		OXF WS	1	28	M	1	.05	Young WC6.1
		LOC GW	2	6				
		LOC BS	1	8	JN	1	.03	Jar, necked
		SH	3	26	JN UR	1	.08	Jar, necked
184	MC1-C2	SH	1	22	JLS	1	.10	Channel-rimmed jar.
186	C4	LNVCC	2	132	BFL	1		Conical flanged bowl
		SH	3	65	BFL	1	.06	Flanged bowl (Harrold form)
		SH tile	1	57				
188	LC1-C2+	HCG	1	13				
		LOC WH	1	9				

188		SH	1	40				
		LOC GW	1	6	JNCUR	1	4	Jar, necked
190	C2-C4	VRW	1	22	MFL	1	.05	Mortarium, flanged
		SH	1	5	JN	1	.03	Jar, necked
		LOC GW	1	4	JN	1	.03	Jar, necked
192	C2+	LOC BS	1	40				
		LOC GW	2	12				
		LEZ SA	2	10	Dr 38	1	3	Drag. 38 bowl
194	C2-C3	LOC GW	1	7				
		BAT AM	1	157				
197	RB	SH	1	14				
199	C2-C4	LOC BS	1	27				
		LOC GW	1	7				
204	C2-C3	LOC GW	3	40				
		GROG SH	2	22				
		LOC BS	1	1				
209	LC1+	SG SA	1	17	18/31	1	.09	Drag. 18/31
		SH	1	58	JLS	1	.17	Channel-rimmed jar
211	C2+	LOC MIC	1	22	DCS H	1	.07	Dish, curved-sided
		SH	1	19	JLS	1	.15	Channel-rimmed jar
		LNVCC	1	6				
213	MLC2+	SH	2	43				
		LOC GW	1	46				gritty fab
		LEZ SA	1	26				

Appendix 4: List of small finds

SF 1 Lead sub-circular pot repair with H-cross-section. No evidence of pottery in recess. Width: *c* 30mm Date : ? Roman. Context 101, topsoil.

SF 2 Disc, lead. Off-centre perforation, possible a weight. Height: 15mm Diameter: 20mm, unstratified

SF 3 Coin, copper alloy – House of Constantine (prototype unclear) 4th century, unstratified

SF 4 Partial flint flake, context 123, fill of ditch [122].

SF 5 Coin, context 105, subsoil

SF 6 Strip, copper alloy (high lead content). Parallel-sided flat-sectioned strip, ornamented with 8 longitudinal grooves, 2 marginally placed and 6 equidistant centrally placed grooves. Organic impressions (grass) in corrosion deposits. Nature of object difficult to determine (poss. straightened ?bracelet frag.). Measurements: 53 x 18mm, context 123, fill of ditch [122]

SF 7 Sheet, copper alloy. Sub-rectangular off cut. Dimensions: 25 x 15mm, context 126, fill of ditch [125]

SF 8 Buckle, copper alloy. Incomplete and damaged, part of frame missing. The buckle is asymetrical with a central strap and tongue bar. Iron tongue still attached to bar. This buckle dates to the late 16th/17th century and would have used to secure spurs or boots, probably the latter. Highfield House gate pathway, context 101, topsoil.

SF 9 Bracelet, copper alloy. Incomplete fragment only (joins with SF10). Flat cross-section decorated with a central panel of longitudinal grooves and closely set oblique notches. Date: Roman. Identical to example from Verumalium (Waugh and Goodburn 1972, fig 32, 31) Height: 16mm, context 105, subsoil.

SF 10 Bracelet, copper alloy. Incomplete fragment only (joins with SF 9). Flat cross-section decorated with a central panel of longitudinal grooves and closely set oblique notches. Height: 16mm, context 105, subsoil

SF 11 Coin, copper alloy. Ae3/4 Constantine I, barbarous Gloria Exercitus (2 soldiers and 2 standards) Trier mint, 330-335, context 209, fill of ditch [208].

SF 12 Coin, copper alloy. Barbarous radiate, mid 3rd century, context 184, fill of ditch [183].

SF 13 Coin, copper alloy. Ae4 – two victories facing issue – mid 4th century, context 206, fill of ditch [205].

SF 14 Coin, copper alloy. Barbarous radiate, mid 3rd century, context 176, fill of ditch [175].

SF 15 Coin, copper alloy. Ae4 – illegible 4th century, context 206, fill of ditch [205].

SF 16 Fitting, copper alloy. Rectangular plate with 3 countersunk screw holes, integral looped projection from one side. Measurements: 45 x 40mm. Post-medieval, context 101, topsoil

SF 17 Horseshoe, iron, with thickened calkin. Post-medieval, context 101, topsoil

SF 18 Strip, iron. Parallel sides, small nail ahered to surface. Measurements: 85 x 20mm, context 188, fill of ditch [187]

SF 19 Rod fragment, iron. Length: 68mm, context 124, layer

SF 20 Nail, iron. Clenched terminal only. No measurements, context 124, layer

SF 21 Rod fragment, iron, context 204, fill of ditch [203]

SF 22 Iron object with fiddle key shaped terminal. Nature of object difficult to determine, context 124, layer

SF 23 Rectangular-sectioned tapered strip, bent at right angles, context 124, layer

SF 24 Nail, iron, Triangular head with squ7are-sectioned shank. Length: 47mm, context 124, layer

Northamptonshire Archaeology
a service of Northamptonshire County Council July 2007

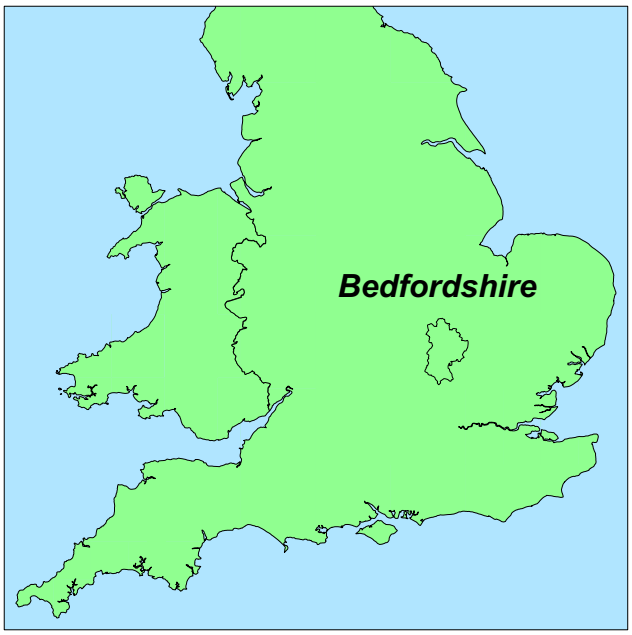

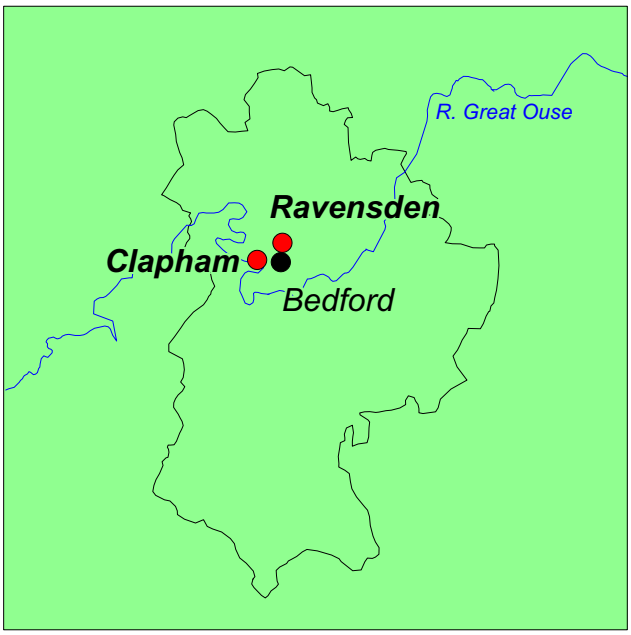

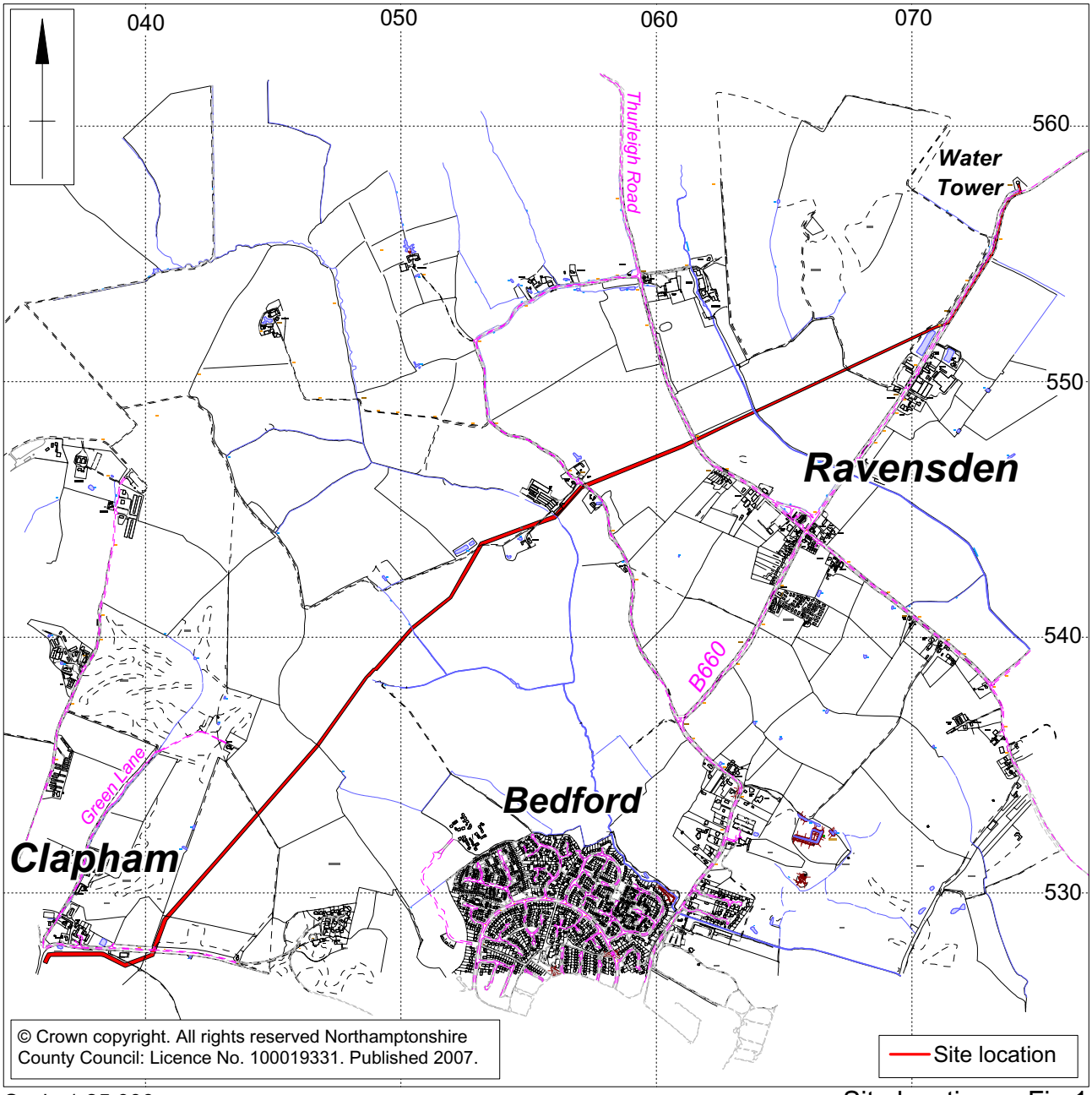

Scale 1:25,000

Site location Fig 1

Scale 1:20,000

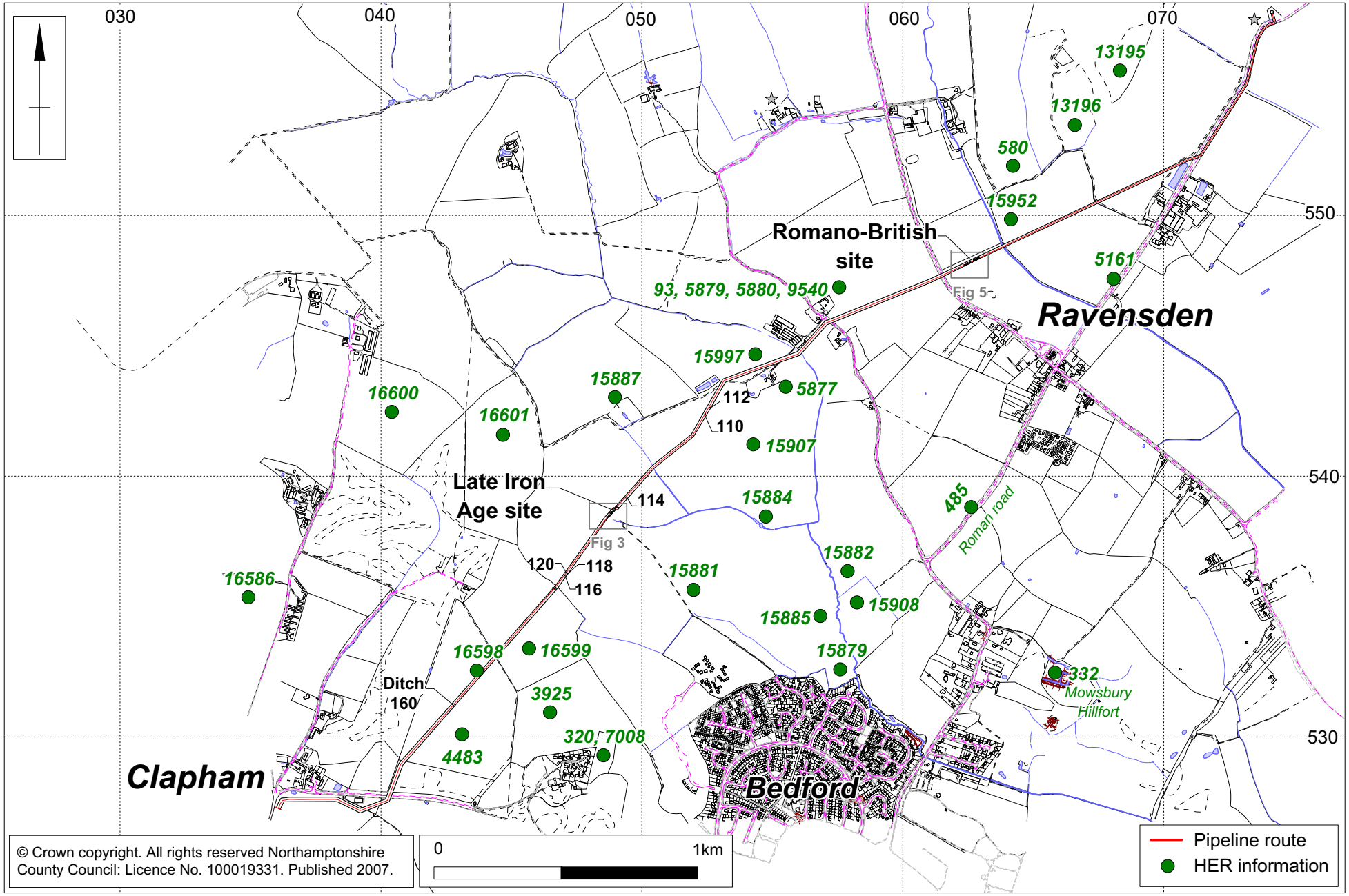

Historic Environment Record data and site location

Fig 2

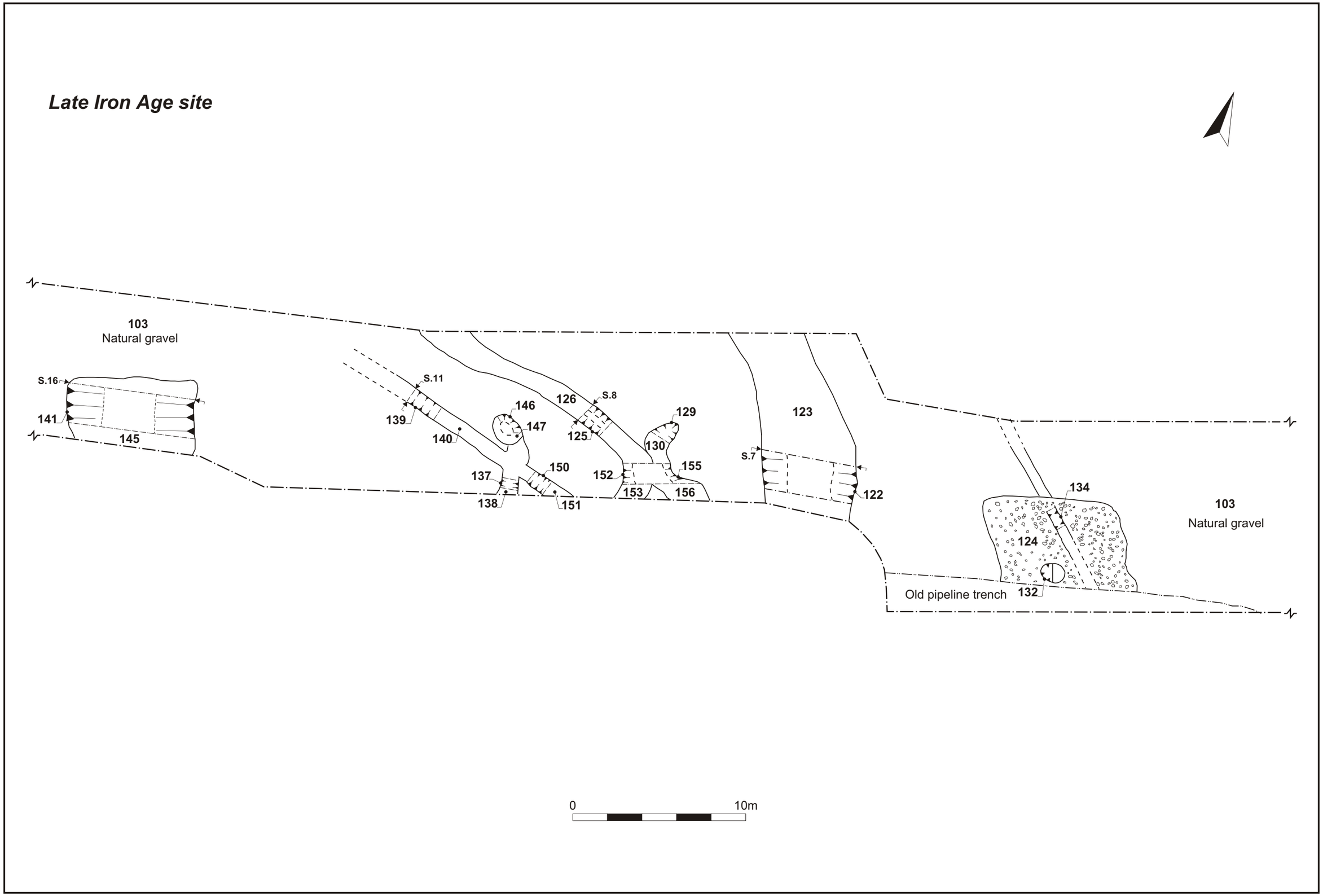

Plan of Late Iron Age site Fig 3

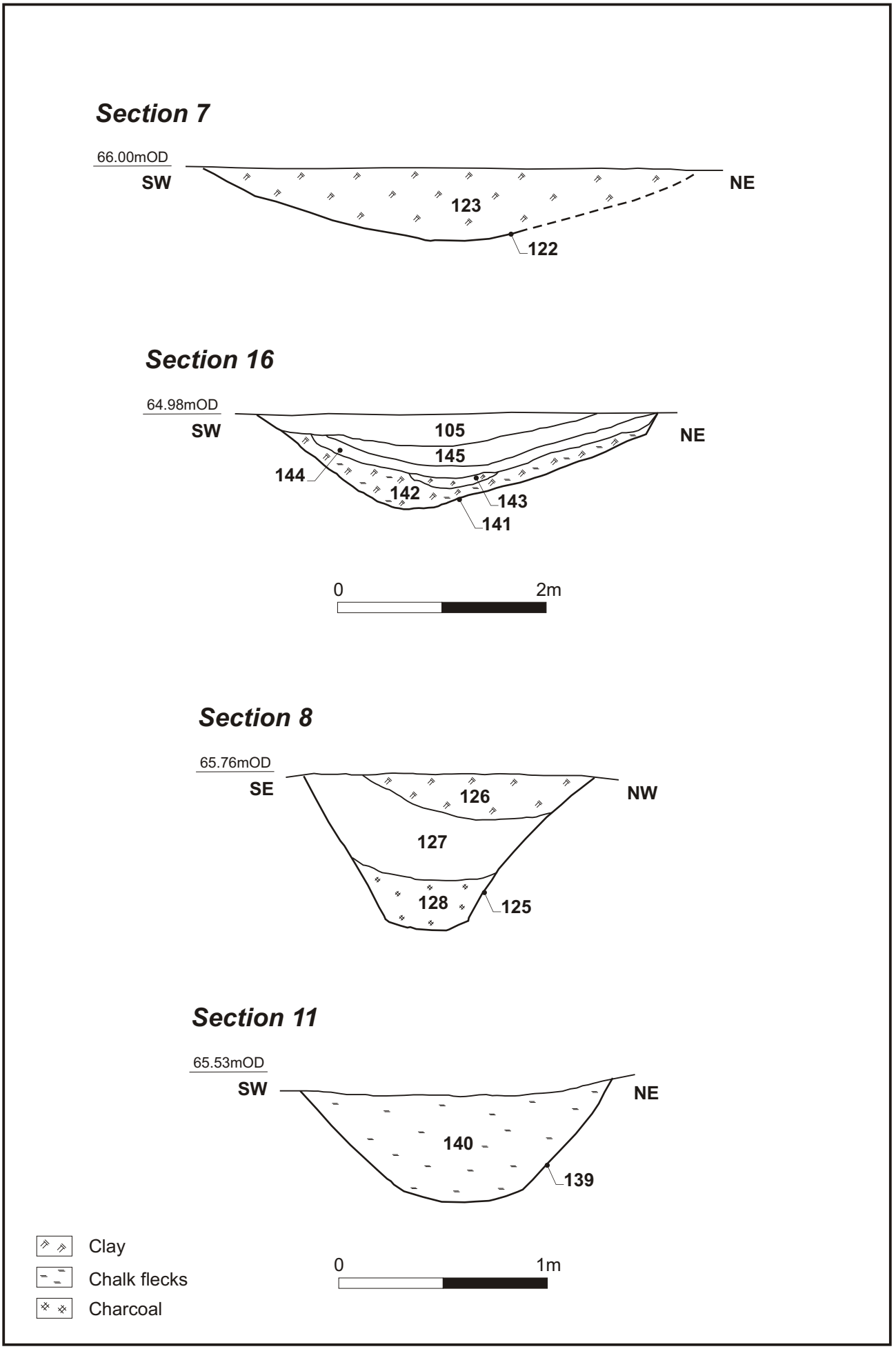

Late Iron Age site: ditch sections 7, 8, 11 and 16 Fig 4

Romano-British site

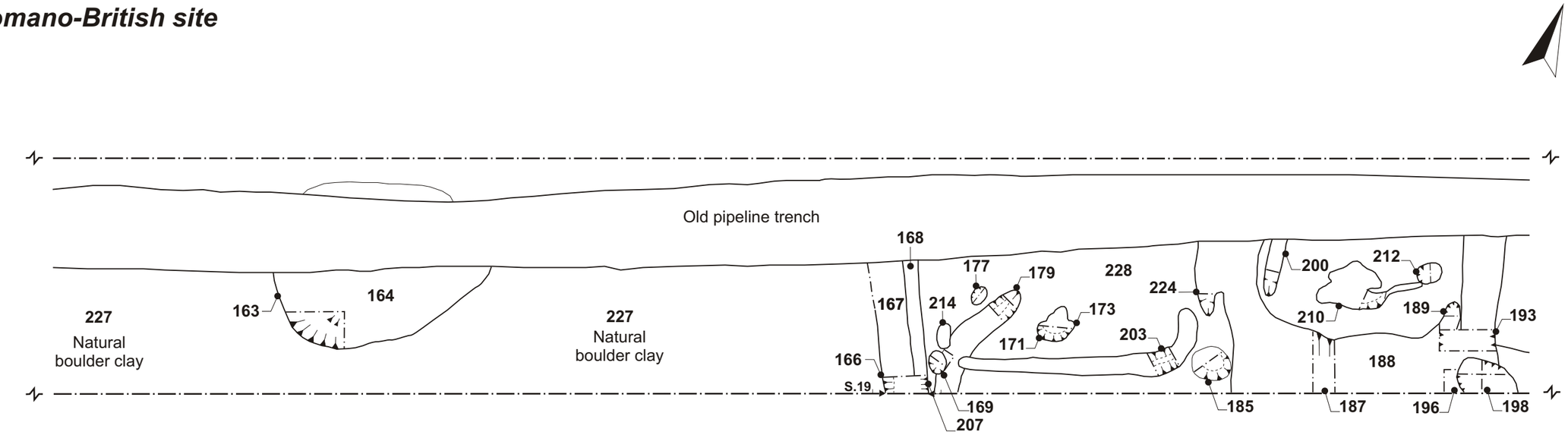

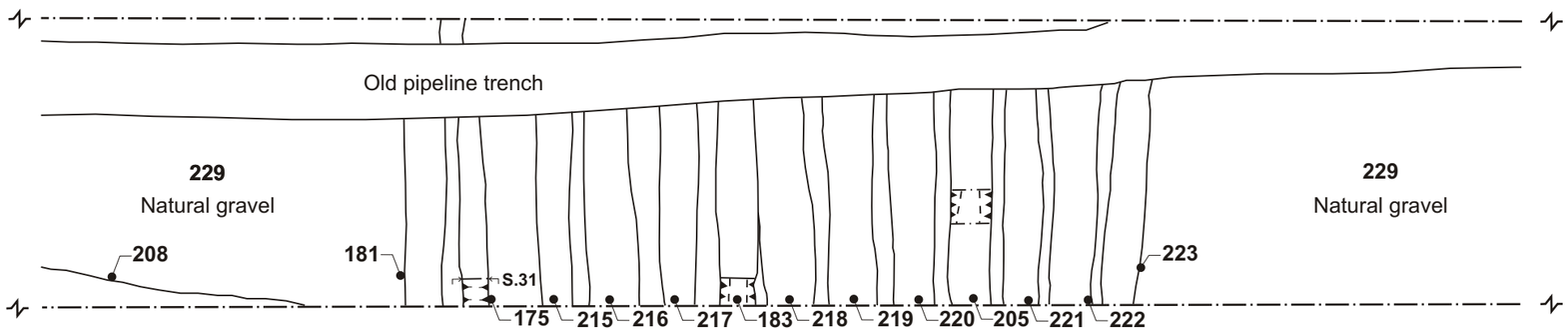

0 10m

Plan of Romano-British site Fig 5

Section 19

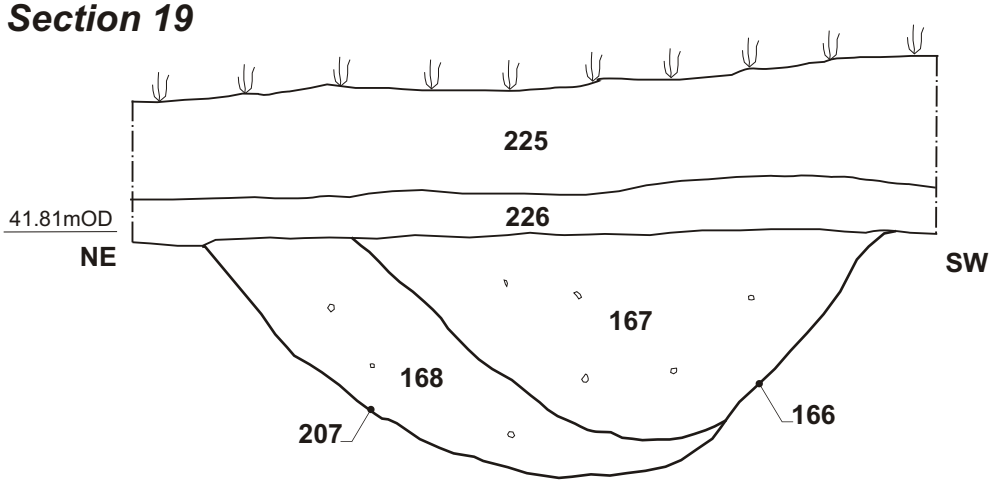

Section 31

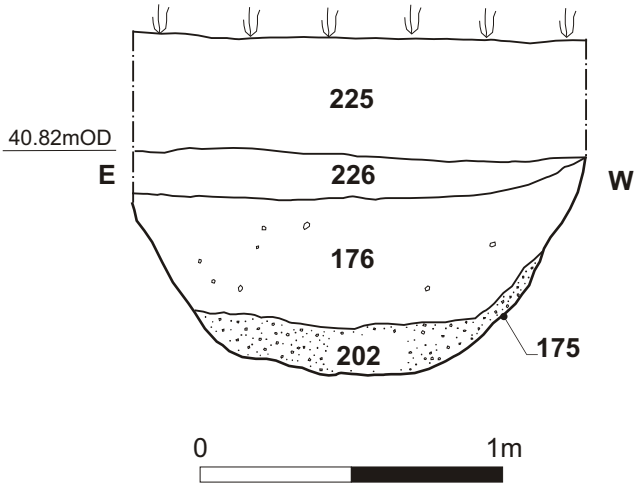

Romano-British site: ditch sections 19 and 31 Fig 6

Plate1: General shot of pipeline easement at north-eastern extremity

Plate 2: Section through ditch [129]