CFA Archaeology Ltd

*archaeological consultants*

*Advice on Archaeology & Planning*

*Environmental Impact Assessment*

*Field Evaluation & Excavation*

*Finds / Environmental Analysis*

*Geophysical Survey*

*Historic Building Recording*

*Site & Landscape Survey*

*Interpretation, Design & Display*

# Lord Deramore School
# Heslington
# York

## Archaeological Evaluation

## Report No. Y199/15

t 0113 271 6060 f 0113 271 3197 e yorkshire@cfa-archaeology.co.uk w www.cfa-archaeology.co.uk

**CFA ARCHAEOLOGY LTD**

Offices C1 and C2
Clayton Business Centre
Midland Road
Leeds
LS10 2RJ

Tel: 0113 271 6060

email: Yorkshire@cfa-archaeology.co.uk
web: www.cfa-archaeology.co.uk

| | |
|---|---|
| Author | Phil Mann BA ACIfA |
| Illustrator | Graeme Curruthers MA MCIfA |
| Editor | Phil Weston BSc MA |
| Commissioned by | Kier Construction |
| Date issued | July 2015 |
| Version | 0.1 |
| OASIS Reference | TBC |
| Planning Application No. | 15/00125/FULM, 15/00126/LBC |
| Grid Ref | 462889 450442 |

This document has been prepared in accordance with CFA Archaeology Ltd standard procedures.

# Lord Deramore School
# Heslington
# York

## Archaeological Evaluation

## Report No. Y199/15

## CONTENTS



## APPENDICES



## FIGURES



## TABLES

**Summary**

An archaeological evaluation was undertaken by CFA Archaeology Ltd on land at Lord Deramore Primary School, Heslington, York during July 2015. Two trenches were excavated in advance of a redevelopment of the existing school. Furrows, potentially of medieval date, were the only archaeological remains encountered on site.

## 1. INTRODUCTION

This report presents the results of an archaeological evaluation undertaken by CFA Archaeology Ltd (CFA) on 23rd July 2015. The works were commissioned by Naomi Field of Prospect Archaeology on behalf of their client Kier Construction. The proposed redevelopment work consists of the construction of a two storey school building with associated hard play surfaces and the demolition of existing school buildings (Planning References 15/00125/FULM and 15/00126/LBC). All work was undertaken in accordance with a Written Scheme of Investigation (WSI) (Field 2015). The CFA code and project number are LORD and 2227 respectfully.

### 1.2 Site Location and Description

Lord Deramore Primary School is situated within the suburb of Heslington approximately 2.8km south-west of York city centre. The 3ha site is bounded to the north-east and east by landscaped ground associated with the University of York campus, the grounds of Heslington church across Field Lane to the north, with residential buildings on all other sides (Fig. 1). The proposed new school building will be situated north-west of the existing school buildings.

The underlying geology is mapped as the Sherwood Sandstone Group with superficial deposits from the Naburn Sand Member covering most of the site and deposits of the York Morain Member within the northern corner (BGS 2015).

### 1.3 Previous Archaeological work and Historical Background

The following is taken from the WSI produced by Prospect Archaeology (Appendix 4).

The proposed development area lies in a wider landscape containing significant archaeological remains. In 2010 a multi-phased settlement located at Heslington East was excavated in advance of the development of the University of York between 700m and 800m to the east of the development. The excavation identified evidence of the well-preserved remains of water management from the Bronze Age, Iron Age and the Romano-British period.

Fragments of human bone dated to the Bronze Age were also encountered and rectangular enclosures of Roman date were also recorded within this cluster of settlement activity. The remains associated with a Roman cemetery at Windmill Lane

are shown on the 1892 Ordnance Survey Map, and lie some 200m to the north of the modern day site.

Heslington village appears to have derived its name from “a place by the hazels” and is likely to have become an established settlement prior to the Domesday Survey of 1086. The village layout is considered to have evolved during the medieval period, when it was a small agricultural settlement surrounded by farm land. The remnants of this era are well documented by the remains of Ridge and Furrow which surround and are within the application site itself.

The site of the primary school is first depicted on the 1853 Ordnance Survey Map, along with the village of Heslington and the Church of St Pauls to the north. The school itself is a Grade II listed structure (Listed Building number 1316285) thought to have been built in 1856 with later additions and alterations. To the east, large regular rectangular field systems are depicted on the 1853 map. The layout of the field systems changes little in the vicinity to the north and to the east of the investigation area from 1853 until the present day. The main roads of Field Lane and Low Lane are shown on the 1892 maps and the only major change in the area is shown in 1958 when the housing development of The Crescent occurs, 250m to the southwest of the investigation area.

To the north and east of Lord Deramore Primary School, gravel extraction pits are depicted from 1853 onwards. Further development occurred to the north of Field Road in 1968 when the housing development comprising Deramore Drive and Crossways was constructed.

Previous work on the site includes a series of geotechnical window samples and test pits undertaken during January of 2014 (ESG 2014), and geophysical surveys undertaken by the University of York in conjunction with the excavation of seven hand-dug test pits carried out by students from the primary school with guidance from post-graduate students from the university (Oswald and Goodchild 2014).

Two further geotechnical site investigations were carried out in February 2015 to investigate in more detail the ground conditions and appropriate foundation solutions.

## 1.4 Aims

The purpose of the intrusive evaluation was to gather sufficient information for the York City Archaeologist to be able to formulate a policy for the management of the archaeological resources present on the site.

Evidence was gathered to establish the presence/absence, nature, date, depth, quality of survival and importance of any archaeological deposits to enable an assessment of the potential and significance of the archaeological remains, and to allow for the determination of any appropriate strategies to mitigate the effect of the proposed development upon the archaeological resource.

## 2. WORKING METHODS

### 2.1 Trial Trenching

All machining was undertaken by a JCB excavator fitted with a toothless ditching bucket under constant archaeological supervision. The trenches were set out using a Trimble GeoXR survey system based on an agreed trench plan.

Linear features (ditches and gullies) were sample excavated at a minimum of 10% of their length and a minimum of 1m per section at regular intervals. Intersections were investigated to establish relationships between features and pits and post holes were sampled at a minimum of 50%. Archaeological features were systematically scanned by metal detector prior to excavation and spoil routinely scanned for finds.

Archaeological remains were recorded by means of photographs, drawings and written records conforming to CIfA standards (2014a) and CFA's quality manuals. All features were planned and drawn in section at an appropriate scale.

All finds of pre-modern date were retained for analysis; modern finds were retained from stratigraphically critical deposits. All finds were treated in accordance with relevant guidance (UKIC 2001 and CIFA 2014b).

A summary of the results of archaeological works will be submitted for inclusion in OASIS and the OASIS reference will appear in the final report.

### 2.2 Standards and Guidance

CFA Archaeology is a registered organisation (RO) with the Chartered Institute for Archaeologists (CIfA). All work was conducted in accordance with relevant CIfA Standards and Guidance documents (CIfA 2014a-b), English Heritage Guidance (EH 2008) and CFA's own standard methodology.

### 2.3 Archiving

The project archive, comprising all CFA record sheets, finds, plans and reports, will be deposited at the County Archaeology Store and will conform to current guidelines (CIfA 2014 and Brown 2011) ensuring the proper transfer of ownership. A summary of the results of the archaeological works will be submitted for inclusion in OASIS.

### 2.4 Monitoring

The trial trenching was monitored by John Oxley of City of York Historic Environment Record who was informed in advance of the works taking place.

## 3. RESULTS

Two trenches were excavated during the evaluation. Appendix 1 consists of a summary of contexts whilst appendices 2 and 3 list details of photography and drawings.

The topsoil (100) consisted of dark brown, silty clay 0.3 to 0.4m thick across the site. This sealed a layer of orange-brown, silty-clay subsoil (101) in both trenches. The natural geology consisted of a mixture of orange-brown silty clay and yellow-orange sandy clay (102). A summary of the results of the trenching is presented below in Table 3.1. Plans and sections of excavated features are denoted within Figure 2.

**Table 3.1: Summary of Results by Trench**

| Trench No. | Trench Size (m) | Depth of Topsoil (m) | Description |
|---|---|---|---|
| 1 | 48 x 1.6 | 0.40 | Natural substrate was orange-brown silty sand with some grey sand mottling. The trench sloped gently downhill from north-east to south-west. Ground cover was grass parkland. Subsoil depth was 0.1-0.15m.<br><br>The trench was moved slightly to the north-east from the original location and shortened due to the presence of an existing footpath at the south-eastern end.<br><br>The trench contained three modern field drains, one orientated north/south. Two orientated north-east/south-west. The centre of the trench had been disturbed by an area of modern activity, with a concrete cap/cover extending beyond the trench limit to the east.<br><br>One feature (104) located towards the south-western end of the trench was recorded. |
| 2 | 50 x 1.6 | 0.25-0.4 | Natural substrate was a mixture of orange-brown silty sand and yellow sandy clay. Trench itself gently sloped downhill from north to south. Subsoil depth varied from 0.3m-0.35m.<br><br>The trench contained one north/south orientated field drain.<br><br>The trench contained four roughly north/south orientated plough furrows, likely medieval in date. Two of these were excavated (106 and 108). The others were very ephemeral and only survived as a shadow on the natural substrate in places. |

### 3.1 Trench 1 (Fig. 3)

The natural geology in Trench 1 was recorded at a depth of 12.51m AOD. Cut through the natural at the south-western end of the trench was a small east/west orientated curvilinear gully (104, Figs. 2 and 4) measuring 0.24m in width by 0.18m in depth. No finds were recorded from this feature.

The centre of the trench had been truncated by modern activity, with a large concrete cover/cap present within the trench and extending beyond the limit of the trench to the east. Three modern field drains were also identified.

### 3.2 **Trench 2** (Fig. 5)

The natural geology in Trench 2 was recorded at a depth of 12.5m AOD to the north-western end of the trench and at 12.1m AOD to the south-eastern end. Overlying the natural substrate was a layer of subsoil consisting of a light brown silty clay.

Two roughly north/south orientated Furrows were excavated within the trench (106 and 108). Located towards the centre of the trench, Furrow 106 (Fig. 2) measured 0.95m in width by 0.10m in depth and was filled by grey silty clay 105. To the south-east of 105 was Furrow 108 (Figs 2 and 6), a feature measuring 1.54m in width and 0.14m in depth and which was again filled by a grey silty clay (107). No finds were recovered from either of the features.

Two further similarly aligned, ephemeral features were noted within the trench and were recorded on the trench plan.

## 4. CONCLUSION

The results of the evaluation indicate that the remains of ridge and furrow ploughing are preserved in some areas of the site. Although no dating evidence was recovered from the features, they are generally considered to be indicative of medieval activity.

## 5. BIBLIOGRAPHY

B.D.P., 2015, *Lord Deramore's Primary School: Heritage Statement,* Report by Building Design Partnership

Brown, D.H., 2011, *Archaeological Archives: A guide to best practice in creation, compilation, transfer and curation*, Institute of Field Archaeologists

CIfA, 2014a, *Standard and Guidance for Field Evaluation*, Chartered Institute for Archaeologists

CIfA, 2014b*, Standard and Guidance for the Collection, Documentation, Conservation and Research of Archaeological Materials*, Chartered Institute for Archaeologists

E.H., 2008, *Investigating Conservation: Guidelines on how the detailed examination of artefacts from archaeological sites can shed light on their manufacture and use*, English Heritage

E.S.G, 2014, *Lord Deramore's Primary School,Heslington, York, Factual Report on Ground Investigation,* Report D3206-13

Field, N, 2015, *Lord Deramore School, Heslington, York: Evaluation Trenching, Written Scheme of Investigation*, Prospect Archaeology

Oswald, A. and Goodchild, H., 2014, *Archaeological Investigations at Lord Deramore's School and on Church Green, Heslington,* Interim report

**Online Resources**

B.G.S. http://www.bgs.ac.uk (Accessed 23/07/15)

# APPENDICES

## Appendix 1: Context Summary

| Context no. | Type | Width (m) | Max Depth (m) | Description |
|---|---|---|---|---|
| 100 | Layer | | 0.4 | Topsoil layer for area of site. Consisted of a dark brown silty organic clay. |
| 101 | Layer | | 0.35 | Subsoil layer for area of site, and particularly Trench 2. Consisted of light brown silty sandy clay with small stone inclusions. |
| 102 | Layer | | | Natural substrate for site area. Consisted of a mixture of orange-brown silty sand and yellow sandy clay. |
| 103 | Fill | 0.24 | 0.18 | Fill of a shallow curvi-linear gully (104) at south-western end of Trench 1. Consisted of soft dark brown silty clay. No finds recovered. |
| 104 | Cut | 0.24 | 0.18 | Cut for a shallow curvi-linear gully located towards the south-western end of Trench 1. Consisted of steeply sloping sides with a 'u'-shaped profile. Feature was orientated roughly east/west and continued beyond the trench in these directions. No finds recovered. |
| 105 | Fill | 0.95 | 0.1 | Fill of a north/south orientated shallow ditch (106). Consisted of grey silty clay with some small stone inclusions in places. No finds recovered. |
| 106 | Cut | 0.95 | 0.1 | Cut for a north/south orientated shallow furrow. Likely remains of a ploughed field system in this area along with other similarly aligned features in this trench. Consisted of shallow sloping sides with a flat base. No finds recovered. |
| 107 | Fill | 1.02 | 0.14 | Fill of a north/south orientated shallow furrow (108). Consisted of soft grey silty clay with some small stone inclusions in places. No finds recovered. |
| 108 | Cut | 1.02 | 0.14 | Cut for a north/south orientated shallow furrow. Likely remains of a ploughed field system in this area along with other similarly aligned features in this trench. Consisted of moderately sloping sides with a flat base. No finds recovered. Cut by a field drain on its north-western edge. |

## Appendix 2: Photographic Register

| Number | Contexts/description | Facing | Conditions |
|---|---|---|---|
| 1 | Trench 1 area pre-excavation general shot | North-east | Sunny |
| 2 | Trench 1 area pre-excavation general shot | North-east | Sunny |
| 3 | Trench 2 area pre-excavation general shot | South-east | Sunny |
| 4 | Trench 2 area pre-excavation general shot | South-east | Sunny |
| 5 | Trench 1 post excavation shot, north-east end of trench | South-east | Overcast |
| 6 | Trench 1 post excavation shot, north-east end of trench | South-east | Overcast |
| 7 | Trench 1 post excavation shot, north-east end of trench | South-east | Overcast |
| 8 | Modern disturbance within centre of Trench 1 | North-east | Overcast |
| 9 | Modern disturbance within centre of Trench 1 | North-east | Overcast |
| 10 | Land drain with in Trench 1, general shot | South-west | Overcast |
| 11 | Land drain with in Trench 1, general shot | South-west | Overcast |
| 12 | Trench 1 post excavation shot, south-west end of trench | North-east | Overcast |
| 13 | Trench 1 post excavation shot, south-west end of trench | North-east | Overcast |
| 14 | Trench 1 post excavation shot, south-west end of trench | North-east | Overcast |
| 15 | West facing section of 104, Trench 1 | East | Overcast |
| 16 | West facing section of 104, Trench 1 | East | Overcast |
| 17 | West facing section of 104, Trench 1 | East | Overcast |
| 18 | South facing section of 106, Trench 2 | North | Overcast |
| 19 | South facing section of 106, Trench 2 | North | Overcast |
| 20 | South facing section of 106, Trench 2 | North | Overcast |
| 21 | North-west end of Trench 2, example stratigraphy | North | Overcast |
| 22 | North-west end of Trench 2, example stratigraphy | North | Overcast |
| 23 | North-west end of Trench 2, example stratigraphy | North | Overcast |
| 24 | Trench 2 post excavation shot, north-west end of trench | South-east | Overcast |
| 25 | Trench 2 post excavation shot, north-west end of trench | South-east | Overcast |
| 26 | Trench 2 post excavation shot, north-west end of trench | South-east | Overcast |
| 27 | Trench 2 post excavation shot, south-east end of trench | North-west | Overcast |
| 28 | Trench 2 post excavation shot, south-east end of trench | North-west | Overcast |
| 29 | Trench 2 post excavation shot, south-east end of trench | North-west | Overcast |
| 30 | South facing section of 108, Trench 2 | North | Overcast |
| 31 | South facing section of 108, Trench 2 | North | Overcast |
| 32 | South facing section of 108, Trench 2 | North | Overcast |
| 33 | North facing section of 108, Trench 2 | South | Overcast |
| 34 | North facing section of 108, Trench 2 | South | Overcast |
| 35 | South-east end of Trench 2, example stratigraphy | North | Overcast |
| 36 | South-east end of Trench 2, example stratigraphy | North | Overcast |
| 37 | Backfilled Trench 1, general shot | South-east | Overcast |
| 38 | Backfilled Trench 1, general shot | South-east | Overcast |
| 39 | Backfilled Trench 2, general shot | South-west | Overcast |
| 40 | Backfilled Trench 2, general shot | South-west | Overcast |

## Appendix 3: Drawing Register

| Number | Sheet No. | Scale | Plan / Section | Description/contexts |
|---|---|---|---|---|
| 1 | 1 | 01:20 | Section | West facing section of 104, Trench 1 |
| 2 | 1 | 01:20 | Section | South facing section of 106, Trench 2 |
| 3 | 1 | 01:20 | Section | South facing section of 108, Trench 2 |
| 4 | 1 | 01:20 | Section | North facing section of 108, Trench 2 |
| 5 | 1 | 01:20 | Plan | Plan of 104, Trench 1 |
| 6 | 1 | 01:20 | Plan | Plan of 106, Trench 2 |
| 7 | 1 | 01:20 | Plan | Plan of 108, Trench 2 |

## Appendix 4: Written Scheme of Investigation

prospect archaeology

# Lord Deramore School, Heslington, York.

# Evaluation Trenching

**NGR: SE 62867 50491**

Client: Kier Construction

**Local Planning Authority: City of York Council**

**Planning Reference: 15/00125/FULM and 15/00126/LBC**

**Date of Report: April 2015 revised July 2015**

**Author: Naomi Field**

# Contents

# 1.0 Introduction

1.1 Kier Construction have obtained planning permission on behalf of The Secretary of State for the construction of two-storey school building with associated hard surfaced play and circulation areas and demolition of existing school building .

1.2 This Written Scheme of Investigation (WSI) has been prepared by Prospect Archaeology Ltd and details the staffing, methodology and timetable of the programme of works. It complies with the Chartered Institute for Archaeologists' (CIfA) Standards and Guidance for Archaeological Excavation and Watching Briefs (CIfA 2014).

# 2.0 Site Location and Description

2.1 Lord Deramore's Primary School is situated within the suburb of Heslington approximately 2.8km southwest of York city centre. The 3ha Site is bounded to the northeast and east by landscaped ground associated with a University of York campus, the grounds of Heslington church across Field Lane to the north with residential buildings on all other sides. The proposed new school building will be situated north-west of the existing school buildings

## Geology and Topography

2.2 The underlying geology is mapped as the Sherwood Sandstone Group with superficial deposits from the Naburn Sand Member covering most of the Site with a small corner of the York Morain Member within the northern corner (British Geological Survey).

2.3 The Site is located on a rectangular parcel of ground which slopes down from its southeast edge gradually from a height of 19m above Ordnance Datum (aOD) to 13m aOD at its north-western edge.

# 3.0 Planning Background

3.1 Planning permission has been granted for the erection of a two-storey school building (use class D1) with associated hard surfaced play and circulation areas, on the west side of the school grounds and north of the existing building complex. Permission was also granted for demolition of parts of the existing school building.

3.2 The Council has agreed to a programme of archaeological evaluation to be carried out prior to commencement of the development, outside the remit of the planning process.

# 4.0 Background

4.1 The proposed development area lies in a wider area containing significant archaeological remains. A multi-phased settlement located at Heslington East was excavated in 2010 in advance of the development of the University of York between 700m and 800m to the east of the development. The excavation identified evidence of the well-preserved remains of water management from the Bronze Age, Iron Age and the Roman period.

4.2 Cranial remains associated with the Bronze Age activity were also encountered and rectangular enclosures of Roman date were also recorded within this cluster of settlement activity. The remains associated with a Roman cemetery at Windmill Lane are shown on the 1892 Ordnance Survey Map, and lie some 200m to the north of the modern day site.

4.3 Heslington village appears to have derived its name from "a place by the hazels" and is likely to have become an established settlement prior to the Domesday Survey of 1086. The village layout is considered to have evolved during the medieval period, when it was a small agricultural settlement surrounded by farm land. The remnants of this era are well documented by the remains of Ridge and Furrow which surround and within the application site itself.

4.4 The site of the primary school is first depicted on the 1853 Ordnance Survey Map, along with the village of Heslington and the Church of St Pauls to the north. The school itself is a Grade II listed structure (Listed Building number 1316285) thought to have been built in 1856 with later additions and alterations. To the east, large, regular rectangular field systems are depicted on the 1853 map. The layout of the field systems changes little in the vicinity to the north and to the east of the investigation area from 1853 until the present day. The main roads of Field Lane and Low Lane are shown on the 1892 maps and the only major change in the area is shown in 1958 when the housing development of The Crescent occurs, 250m to the southwest of the investigation area.

4.5 To the north and east of Lord Deramore's Primary School, gravel extraction pits are depicted from 1853 onwards. Further development occurred to the north of Field Road in 1968 when the housing development comprising Deramore Drive and Crossways was constructed.

## Previous work on Site

4.6 Geotechnical survey January 2014. Three test pits, three window samples and three bore holes were excavated by hand to a depth of up to 1.2m, or the natural geological horizon,

after which further deep bore hole excavations were undertaken by the drilling team. No archaeological features or artefacts were identified during the watching brief, despite careful examination of the excavated areas and spoil .

4.7 October 2014 Geophysical surveys (magnetometry and earth resistance techniques) were carried out at Lord Deramore's under the supervision of Dr Goodchild in parallel with University of York student training conducted on Church Green, on the opposite side of Field Lane from the school. With the assistance of a team of post-graduate students, a series of seven 1.2m$^2$ test-pits were hand-dug along the line of the reconstructed First World War trench, with the school-children sieving most of the spoil to recover artefacts (Oswald and Goodchild 2014).

4.8 The stratigraphy in each test pit comprised two homogeneous layers: a fine, dark soil 18-20cms thick (interpreted as a post-medieval ploughsoil), overlying a paler brown, sandy soil, containing more frequent gravels and larger cobbles, 8-22cms thick (interpreted as a medieval ploughsoil). The upper layer contained moderate quantities of small sherds of predominantly post-medieval pottery, including some wares of early – mid-20th century date, together with clay pipe stems, glass and nails (both hand- and machine made) metal objects. From the large numbers of small fragments of low-grade coal and small lumps of cinder, it is inferred that the area was subjected to steam ploughing, possibly up to and including the time of the Second World War. The lower layer contained all but one of the medieval pottery sherds, together with a single sherd of Roman pottery and a single small worked flint, a primary flake retaining some cortex. No features cut into the subsoil were detected within the test pits(Oswald and Goodchild 2014).

4.9 Two more geotechnical site investigations were carried out in February 2015 (Dunelm 2015 and Cundall 2015) to investigate in more detail the ground conditions and appropriate foundation solutions.

## 5.0 Aims and Objectives

5.1 The purpose of the intrusive evaluation will be to gather sufficient information for the York City Archaeologist to be able to formulate a policy for the management of the archaeological resources present on the site.

5.2 Evidence shall be gathered to establish the presence/absence, nature, date, depth, quality of survival and importance of any archaeological deposits to enable an assessment of the

potential and significance of the archaeological remains, and to allow for the determination of any appropriate strategies to mitigate the effect of the proposed development upon the archaeological resource.

## 6.0 Method

6.1 Fieldwork will be undertaken by a team from CfA. Two trenches each measuring 50m long by 1.6m wide located as shown on the attached plan, or as near as site conditions will allow. The fieldwork will be undertaken by a team of experienced field archaeologists over a period of approximately three working days, with a start date to be agreed.

6.2 The building will be constructed on raft foundations, full details of which are currently being finalised. The proposed formation level of the new building is to be around 600mm below existing ground level. The evaluation trenches will be dug to the same depth as formation level for the proposed new building.

6.3 Mechanical excavation will under the direction of the supervising archaeologist. Once the area is stripped of topsoil all features encountered will be plotted and then excavated according to the sampling strategy.

6.4 The trenches will be backfilled on completion of the work but there will be compaction of the ground or reinstatement of the grass as the site will be built over.

## 7.0 Excavation and Recording

7.1 The existing ground surface and topsoil will be removed by 360º excavator using a toothless ditching bucket under continuous archaeological supervision.

7.2 Following the identification of archaeological deposits, all further excavation will be by hand, by experienced/qualified archaeologists to natural undisturbed deposits. Sufficient of each feature will be excavated to determine its date and function.

7.3 Linear features will be sampled a minimum of 10% along their length (each sample section to be not less than 1m), or a minimum of a 1m sample section, if the feature is less than 5m long. Should specialised deposits (e.g. localised refuse dumping, industrial wastes) be present, then more extensive excavation will be undertaken. Junctions of linear features with other features will also be excavated to determine stratigraphic relationships. All terminals will be excavated.

7.4 Discrete features will be half-sectioned in the first instance. Discrete features containing significant structural traces or important artefactual or environmental material will be fully excavated. Post holes and stake holes (where not clearly forming a structure) will be half-sectioned ensuring that relationships are investigated.

7.5 In the event of positive results in the excavated trenches, a sufficient sample of archaeological features and deposits revealed will be sample excavated manually. It is not anticipated that the complete excavation of features will be necessary at this stage.

7.6 A drawn record will be maintained, comprising a site plan showing the locations of the area excavation within the site, an overall site plan, feature plans and section drawings as appropriate. All drawings will be referenced to the overall site plan.

7.7 A photographic record of the project and of each feature will be made and photographs illustrating the relationships between groups of features and general progress will also be taken. Archival record shots will be b/w film and colour digital shots will be used to supplement the record but will not form part of the formal archive.

7.8 Finds will be bagged and labelled according to their context of origin. All finds will be treated in accordance with the recommendations contained in First Aid for Finds (Watkinson & Neale 1998, 3rd edition). Advice will be taken on any finds requiring immediate specialist treatment.

### Environmental Sampling

7.9 An appropriate level of environmental samples will be taken from deposits that can be securely dated and/or placed in the site's stratigraphic sequence and in accordance with the English Heritage Environmental Archaeology (2011). Samples will be no less than 40 litres (where possible). If samples are required from discrete features that are not proposed for 100% excavation they will be taken from the unexcavated 50%. Sampling of stake-holes or small features will require the excavation of 100% of the feature.

7.10 Sampling will focus on deposits that have the potential to assist with the research objectives. The potential for scientific dating of industrial residues or structures will be considered as a contingency item.

### Industrial Remains

7.11 The possibility of industrial material is recognised. Slag, coal, fired clay etc will be collected for examination.

### Human Remains

7.12 Should human remains be encountered the consultant, curator and coroner should be informed Removal of human remains will only take place in accordance with a Ministry of Justice licence (which may be required under the 1857 Burials Act).

### Treasure

7.13 The possibility of encountering items of treasure, as defined in the Treasure Act (1996), is noted and provision will be made for informing the necessary authorities, and providing appropriate security measures, should the need arise.

## 8.0 Post-excavation processing

8.1 Finds and records will be returned to the contracted unit for processing. Records will be checked and entered into a computerised database. All finds will be treated in accordance with current EH best practice, including 'Investigative Conservation'. Finds will be cleaned (where appropriate) and marked and boxed for transfer to the relevant specialists according to accepted principles and in line with appropriate period/ material guidelines. Environmental samples will be washed and assessed by an environmental archaeologist.

8.2 Where material suitable for scientific dating is recovered, sufficient samples will be undertaken to meet the aims of the project.

8.3 For all categories of material recovered, including finds, palaeo-environmental, industrial and other specialist samples, an assessment by an appropriately experienced specialist will be undertaken.

8.4 Environmental samples will be processed and sorted, and any artefacts recovered provided to the appropriate specialist(s) to be considered alongside the hand-recovered material. Basic stratigraphic information will be supplied to the project specialists.

8.5 Where assessment has identified the need for further analysis, this will be completed drawing upon the contingency allowed.

8.6 All ferrous objects and a selection of non-ferrous objects (including all coins), will be x-radiographed.

## 9.0 Programme & Staffing

9.1 Fieldwork will be undertaken by CfA Archaeology. It is anticipated that this will take 2-3 days depending upon the quantity of archaeological remains that are revealed. This will be

followed by 4-6 weeks for reporting depending on the need for specialist assessments. Full CV's are available on request. The following specialists will be used as required:

| | |
|---|---|
| Osteoarchaeology | Malin Holst |
| Special finds and glass | Hilary Cool |
| Post-Roman pottery | Paul Blinkhorn |
| Neolithic or Bronze Age pottery | Terry Manby<br>Blaise Vyner<br>Elaine Morris |
| Roman and Pre-Roman Iron Age pottery | Maggi Darling<br>Christopher Cumberpatch BA PhD |
| Conservation Laboratory | Ian Panter |
| Dendrochronology | Ian Tyers |
| Palaeoenvironmental Scientist | Mike Cressey HND BA MSc PhD MCIfA (CFA Archaeology) |
| Archaeobotany | Mhairi Hastie BSc MSc ACIfA (CFA Archaeology) |
| Archaeozoology | Jennifer Thoms MA PhD FSA Scot |
| Soil Micromorphology | Clare Ellis BA PhD MCIfA |
| Mollusca and fish remains | Ruby Ceron-Carrasco MA PhD |
| Medieval and post-medieval pottery | Christopher Cumberpatch BA PhD |
| Palynology | Robert McCulloch BA PhD (University of Stirling) |
| Ceramic Building Material | John Tibbles BA ACIfA |
| Industrial and domestic waste analysis, archaeological materials and residue analysis | David Starley BSc PhD |

## 10.0 Reporting

10.1 Copies of the report will be supplied to the client, City of York Council Planning department and a .pdf copy of the report will be deposited with the City of York Historic Environment Record (CYCHER). A digital copy of the report will also be sent to the English Heritage Science Advisor for the region and with the ADS.

10.2 The report will contain the following sections:

- Executive Summary, brief summary of the reasons for the work, methods used and results.
- Introduction, describing the scope and circumstances of the work, archaeological background and structure of the report
- Methodology
- descriptive account of the recording methods used and the results, together with an assessment of their archaeological importance, their possible relationship to relevant known features adjacent to the Development Site and estimated reliability of the results
- a phased interpretation of the features
- Discussion of the results and their significance in relation to local, regional and national sites, as appropriate
- Conclusions

- specialists' reports on all categories of artefacts recovered (except modern items). Full archive lists will accompany the specialists' finds reports.
- specialists' reports on environmental samples taken (if taken)
- a complete context list with short description
- Illustrations and plates as appropriate. Illustrations to be included are: a detailed location map, a detailed site plan showing all trenches, all trench plans and sections and detailed plans and sections of features, select artefact illustrations and a selection of scanned photographs; an overall site plan showing all (phased) archaeological features will also be included.
- References
- OASIS summary

10.3 A synopsis of the narrative report, material archive and research potential of the site will be prepared and submitted with the report so that this can be published in an annual summary of archaeological work in the City of York.

## 11.0 Monitoring

11.1 The York city Archaeologist will be informed of the proposed start date and will be kept informed of progress throughout the field and post-excavation work. A member of Prospect Archaeology staff will monitor the excavation and post-excavation work on behalf of the client. Site monitoring visits will be co-ordinated by Prospect Archaeology.

### Health and Safety

11.2 All site work will be carried out in accordance with the relevant current Health and Safety legislation. A copy of the Health and Safety Document is available on request and a Risk Assessment will be prepared prior to commencement of work on site.

### Insurance

11.3 PA and its sub-contractors are fully covered by Employers and Public Liability and Professional Indemnity insurances, copies of which are available for inspection on request.

## 12.0 Archiving

12.1 The site archive will be prepared in accordance with the UKIC's document Guidelines for the Preparation of Excavation Archives for Long Term Storage and the CIfA's Standard And Guidance for the creation, compilation, transfer and deposition of archaeological archives 2014.

12.2 Ultimately the ordered and checked archive, along with artefacts, ecofacts and relevant documents will be deposited with the Yorkshire Museum. There is a temporary suspension of all enquiries relating to archaeology due to work on the Richard III exhibition. Once this

suspension is lifted the necessary arrangements will be made. This excludes finds that are subject to the Treasure Act 1996 (and later amendments), the deposition of which will be determined separately. A budget to cover the museum's deposition charge has been allowed for in the project costs to the client.

## 13.0 References

English Heritage 2011 (second edition) *Environmental Archaeology: A guide to the theory and practice of methods, from sampling and recovery to post-excavation. Centre for Archaeology Guidelines*

BDP 2015 *Lord Deramore's Primary School: Heritage Statement.* Report by Building Design Partnership

ESG 2014 *Lord Deramore's Primary School,Heslington, York. Factual Report on Ground Investigation.* Report D3206-13

Oswald, Alastair and Goodchild Dr Helen 2014 *Archaeological Investigations at Lord Deramore's School and on Church Green, Heslington* . Interim report

Reid, Andrew 2014 *Lord Deramore's Primary School, Heslington, York. Archaeological Watching Brief* Wessex Archaeology Report ref. 102900.01

# 14.0 Figures


Fig. 1 Site location showing extent of Heslington Conservation Area (red line) and Listed buildings (orange)

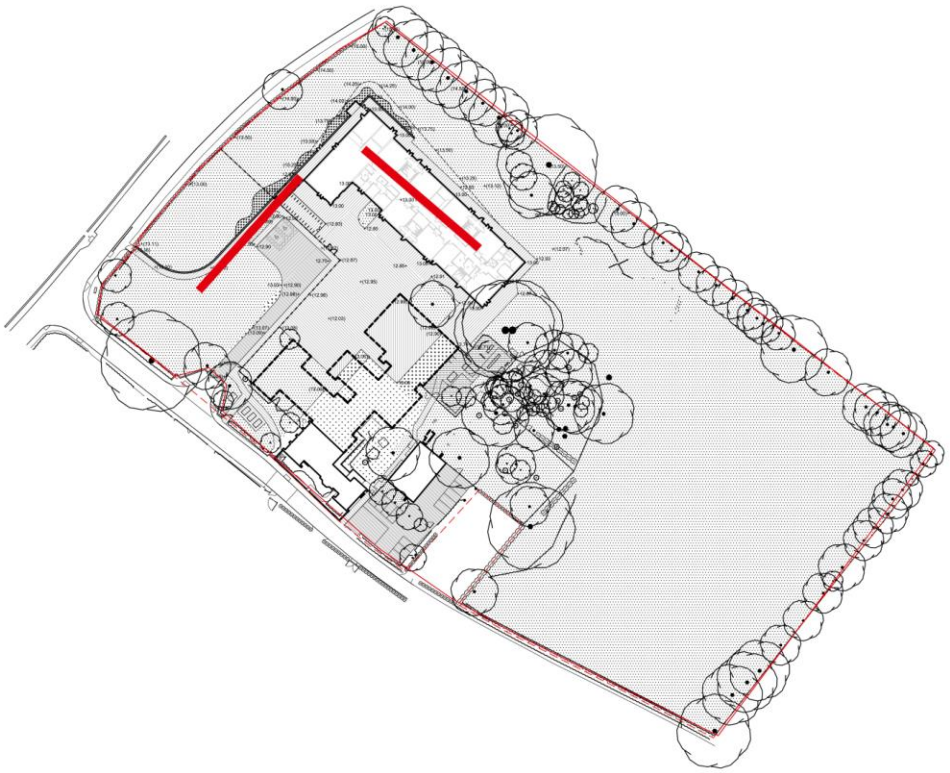

KEY

- PROPOSED BUILDING / EXISTING BUILDING RETAINED
- EXISTING BUILDING REMOVED
- EXISTING VEHICULAR SURFACE RETAINED
- PROPOSED VEHICULAR SURFACE
- EXISTING PEDESTRIAN HARD SURFACE RETAINED
- PROPOSED PEDESTRIAN HARD SURFACE OVER EXISTING BUILDING FOOTPRINT
- PROPOSED PEDESTRIAN HARD SURFACE
- EXISTING TREE RETANED
- EXISTING HEDGE RETAINED
- PROPOSED HEDGE
- EXISTING FENCING RETAINED
- TOP OF PROPOSED EMBANKMENT
- +(13.25) EXISTING LEVEL
- +13.25 PROPOSED LEVEL

Lord Deramore's School, York. Proposed site layout with archaeological trenches (50m long) superimposed. (Plan BDP-04(9)-LP-005)

**FIGURES 1 – 6**

map detail

Lord Deremore Primary School

Trench 1

Trench 2

Fig. 2a

Fig. 2b

Fig. 2c

**Key:**

- Archaeological Evaluation Trench
- Archaeological features
- Field drains
- Modern features

CFA ARCHAEOLOGY LTD
Offices C1 & C2
Clayton Business Centre
Midland Road
Leeds, LS10 2RJ
T: 0113 271 6060
F: 0113 271 3197
yorks@cfa-archaeology.co.uk
www.cfa-archaeology.co.uk

| Fig. No: | Report No: |
|---|---|
| 1 | Y199/15 |

Title:
Site location and trench layout

Project:
Lord Deremore Primary School, Heslington, York

Client:
Kier Construction

Scale at A3:
1:250

| Drawn by: | Checked: | Date: |
|---|---|---|
| GC | SW | 31/07/2015 |

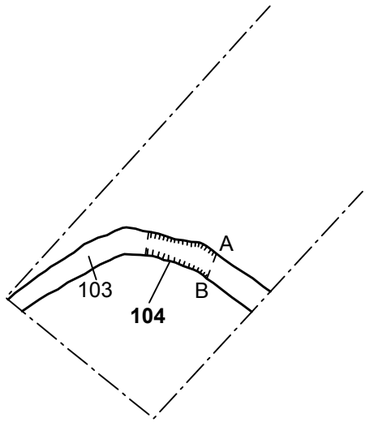


Fig. 2a Plan of 104, Trench 1

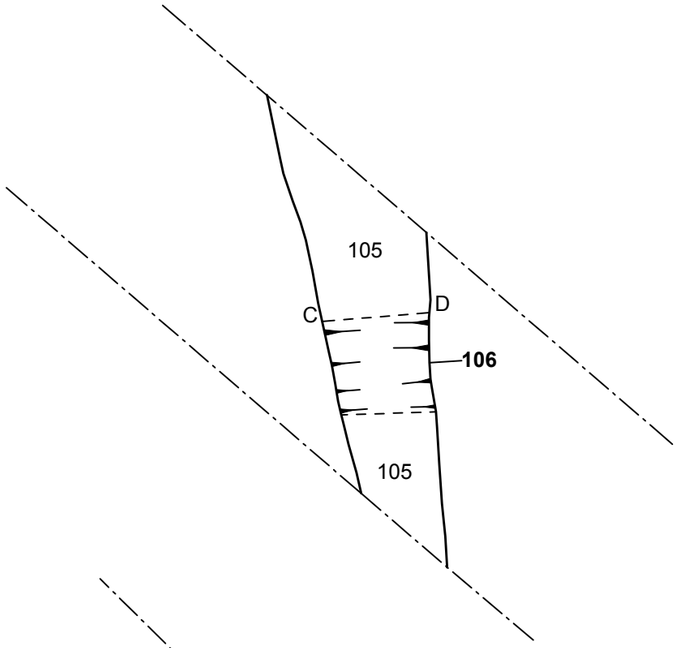


Fig. 2b Plan of 106, Trench 2

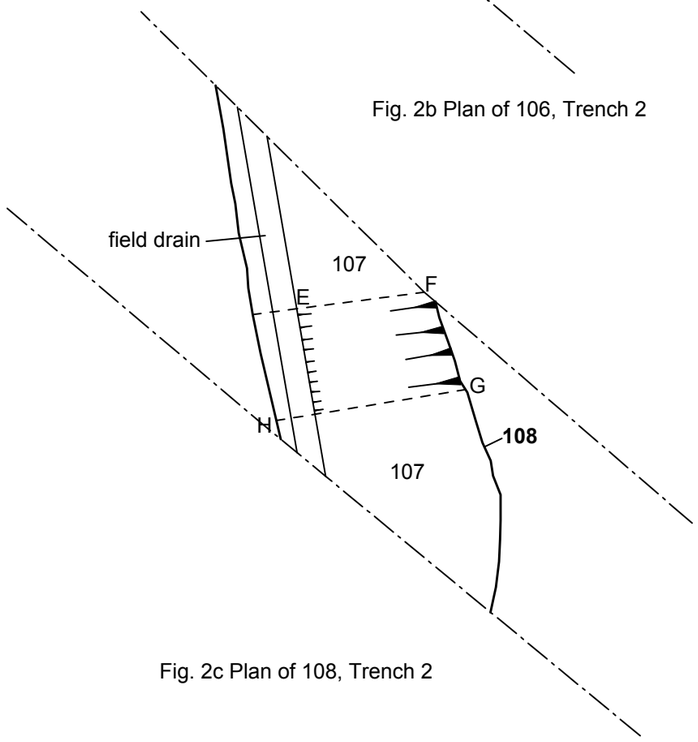


Fig. 2c Plan of 108, Trench 2

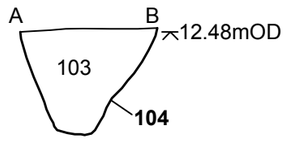


Fig. 2d West-facing section of 104, Trench 1

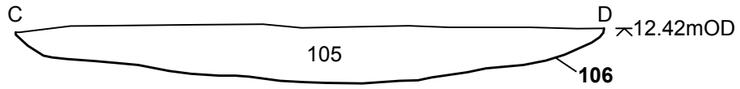


Fig. 2e South-facing section of 106, Trench 2

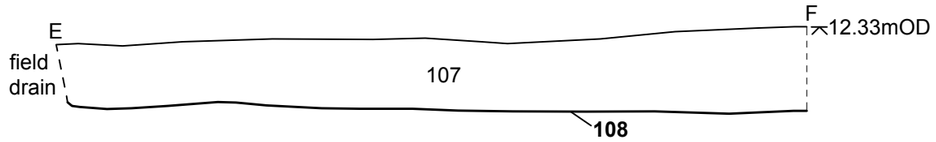


Fig. 2f South-facing section of 108, Trench 2

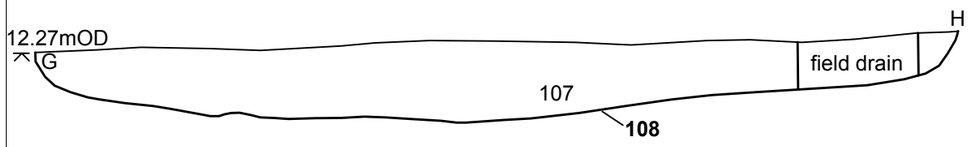


Fig. 2g North-facing section of 108, Trench 2

0 2m

0 50cm

**Key:**

CFA ARCHAEOLOGY LTD
Offices C1 & C2
Clayton Business Centre
Midland Road
Leeds, LS10 2RJ
T: 0113 271 6060
F: 0113 271 3197
yorks@cfa-archaeology.co.uk
www.cfa-archaeology.co.uk

| Fig. No: 2a-h | Report No: Y199/15 |
|---|---|

Title:
Plans and sections

Project:
Lord Deremore Primary School, Heslington, York

Client:
Kier Construction

Scale at A3:
Plans @ 1:50
Sections @ 1:10

| Drawn by: | Checked: | Date: |
|---|---|---|
| GC | SW | 31/07/2015 |

Fig.3 Trench 1 general shot, facing north-east

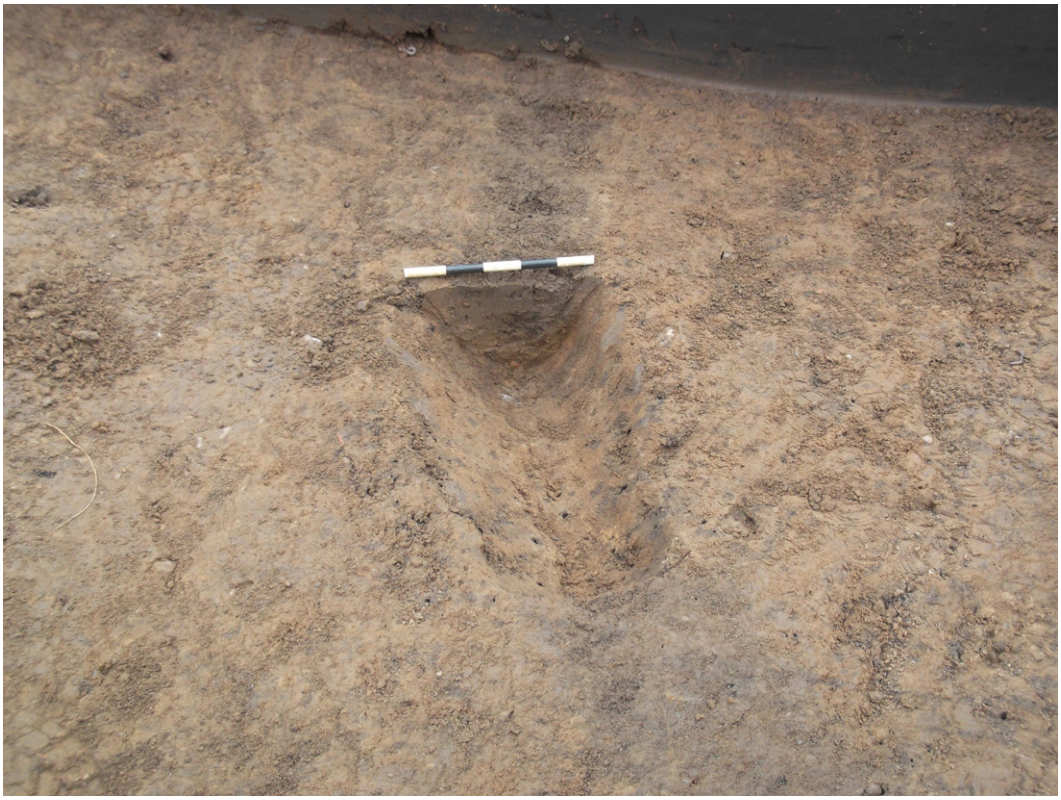

Fig.4 West-facing section of 104

CFA ARCHAEOLOGY LTD
Offices C1 & C2
Clayton Business Centre
Midlands Road
Leeds, LS10 2RJ

T: 0113 271 6060
F: 0113 271 3197
yorkshire@cfa-archaeology.co.uk
www.cfa-archaeology.co.uk

| Title: | Fig. 3 - 4 | Report: Y199/15 | Drawn: GC | CKD: SW | Date: 31/07/15 |
|---|---|---|---|---|---|
| | Client: Kier Construction | | | | |
| Project: Lord Deramore Primary School, Heslington, York | | | | | |

Fig.5 Trench 2 general shot, facing north-west

Fig.6 South-facing section of 108

CFA ARCHAEOLOGY LTD
Offices C1 & C2
Clayton Business Centre
Midlands Road
Leeds, LS10 2RJ
T: 0113 271 6060
F: 0113 271 3197
yorkshire@cfa-archaeology.co.uk
www.cfa-archaeology.co.uk

| Title: | Fig. 5 - 6 | Report: Y199/15 | Drawn: GC | CKD: SW | Date: 31/07/15 |
|---|---|---|---|---|---|
| | Client: Kier Construction | | | | |
| Project: Lord Deramore Primary School, Heslington, York | | | | | |